1428

PUBLICATION NUMBER: 1920-0030B
JANUARY 1982

HARRIS
COMMUNICATION AND
INFORMATION PROCESSING

RF-550 RECEIVER

INSTRUCTION MANUAL

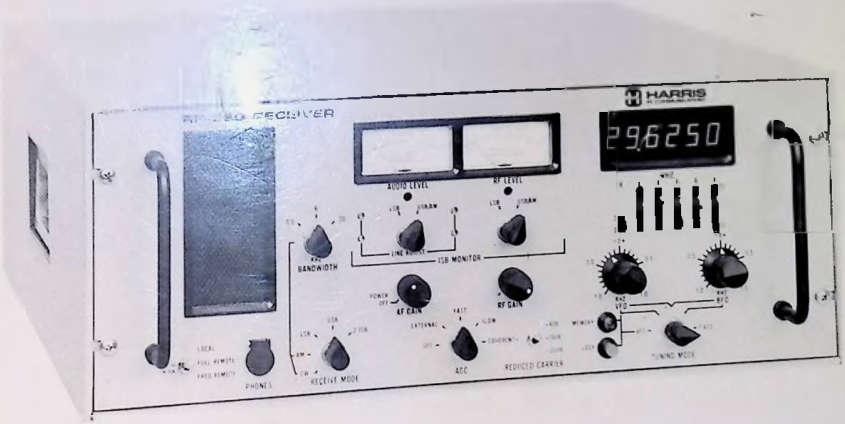

WARRANTY

Harris RF Communications warrants the equipment purchased hereunder to be free from defect in material and workmanship under normal use and service, when used for the purpose of which the same was designed, for a period of one year from the date of delivery, provided that notice of such defect is given to Harris RF Communications within sixty (60) days after the discovery thereof and provided that inspection by Harris RF Communications indicates the parts are defective to Harris RF Communications' reasonable satisfaction. Harris RF Communications' obligations under this warranty are limited to the repair or replacement of defective parts and the return of such repaired or replaced parts to the purchaser FOB factory. At Harris RF Communications' option, any defective part shall be returned to Harris RF Communications' factory for inspection, properly packed and all expenses prepaid. No parts shall be returned unless the purchaser first obtains a return authorization number, which will be furnished on request. Electron tubes are warranted in accordance with the manufacturer's standard tube warranty policy, which will be furnished on request. Equipment furnished by Harris RF Communications, but manufactured by another, bears only the warranty given by such other manufacturer, which will be furnished upon request. **NO WARRANTIES OTHER THAN THOSE SET FORTH IN THIS SECTION ARE GIVEN OR ARE TO BE IMPLIED INCLUDING IMPLIED WARRANTY FOR MERCHANTABILITY OR FITNESS FOR THE INTENDED PURPOSE, WITH RESPECT TO THE EQUIPMENT FURNISHED HEREUNDER AND HARRIS RF COMMUNICATIONS SHALL IN NO EVENT BE LIABLE FOR CONSEQUENTIAL DAMAGES, OR FOR LOSS, DAMAGES, OR EXPENSE DIRECTLY OR INDIRECTLY ARISING FROM THE USE OF THE PRODUCTS, OR ANY INABILITY TO USE THEM EITHER SEPARATELY OR IN COMBINATION WITH OTHER EQUIPMENT.**

PUBLICATION NUMBER: 1920-0030B
JANUARY 1982

RF-550 RECEIVER

INSTRUCTION MANUAL

Copyright © 1982
By Harris Corporation
All Rights Reserved

HARRIS

HARRIS CORPORATION RF COMMUNICATIONS DIVISION
1680 University Avenue Rochester, New York 14610 U.S.A.
Ph 716-244-5830 Cable RFCOM Rochester, NY TELEX 978464

1. Start mouth to mouth breathing immediately,seconds count. Do not wait to loosen clothing, warm the casualty, or apply stimulants.

2. Lay casualty on his back and place any available jacket or blanket under his shoulders.

3. Lift the neck. (Figure 1)

4. Move forehead back as far as possible and open mouth by lifting jaw forward. (Figure 2)

5. Take a deep breath and open your mouth widely.

6. Pinch casualty's nose and blow into casualty until you see the chest rise. (Figure 3)

7. Remove your mouth and let casualty's chest deflate. (Figure 4)

8. Continue mouth-to-mouth breathing without interruption at the rate of 10 to 12 breaths a minute. If any air retained in the stomach after exhalation by casualty, press gently on stomach to expel air.

9. If chest does not rise, check for obstruction in casualty's mouth; clear foreign material by turning the head to one side and using finger, tissues etc. Check neck extension and recommence mouth-to-mouth breathing.

10. While mouth-to-mouth breathing is continued have someone else;
    a. Loosen casualty's clothing
    b. Summon medical aid.
    c. Keep the casualty warm.

11. Don't give up. Continue without interruption until the casualty is revived, or until a doctor pronounces the casualty is dead. Four hours or more may be required.

12. Do not leave casualty when he revives, be ready to resume artificial respiration if necessary.

13. Do not give liquids while victim is unconscious.

Figure 1

Figure 2

Figure 3

Figure 4

ARTIFICIAL RESPIRATION (MOUTH-TO-MOUTH METHOD)

TABLE OF CONTENTS

SECTION 1

Paragraph		Page
	PART 1 INTRODUCTION	
1.1	General Description	1-1
1.2	Frequency Tuning and Stability	1-2
1.3	Receiving Modes	1-2
1.4	Automatic Gain Control	1-2
1.5	Spurious Performance	1-2
1.6	Remote Control	1-3
1.7	Reliability and Maintenance	1-3
1.8	Interface Capability	1-3
1.9	Options and Accessories	1-3
	PART 2 INSTALLATION AND INTERFACE DATA	
2.1	Power Requirements	2-1
2.2	Site Selection	2-1
2.3	Interconnection Requirements	2-1
2.4	Antennas and Transmission Lines	2-1
2.4.1	Doublet Antenna Kits	2-5
2.5	Typical Systems	2-5
2.5.1	Standard RF-550 System	2-5
2.5.2	RF-572 Option	2-5
2.5.3	RF-573 Option	2-7
2.5.4	RF-574 Option	2-7
2.5.5	RF-550 with RF-794RE or RF-576	2-7
2.5.6	RF-550 Internal Strapping Option	2-7
2.6	RF-550 with FSK Converter	2-9
2.7	Mounting	2-9
2.8	Cables	2-9
	PART 3 OPERATION	
3.1	General	3-1
	PART 4 FUNCTIONAL DESCRIPTION	
4.1	General	4-1
4.2	Input Filter Assembly	4-1
4.3	RF/IF Assembly	4-1
4.4	IF Filter Assembly	4-1
4.5	IF Amplifier Assembly	4-2
4.6	Audio Output Assembly	4-2
4.7	Audio Amplifier Monitor Assembly	4-2
4.8	Synthesizer	4-2
4.9	Automatic Frequency Control (AFC)	4-5
4.10	Control Interface	4-6
4.11	Display	4-6

TABLE OF CONTENTS

SECTION I

Paragraph		Page
	PART 1 INTRODUCTION	
1.1	General Description	1-1
1.2	Frequency Tuning and Stability	1-2
1.3	Receiving Modes	1-2
1.4	Automatic Gain Control	1-2
1.5	Spurious Performance	1-2
1.6	Remote Control	1-3
1.7	Reliability and Maintenance	1-3
1.8	Interface Capability	1-3
1.9	Options and Accessories	1-3
	PART 2 INSTALLATION AND INTERFACE DATA	
2.1	Power Requirements	2-1
2.2	Site Selection	2-1
2.3	Interconnection Requirements	2-1
2.4	Antennas and Transmission Lines	2-1
2.4.1	Doublet Antenna Kits	2-5
2.5	Typical Systems	2-5
2.5.1	Standard RF-550 System	2-5
2.5.2	RF-572 Option	2-5
2.5.3	RF-573 Option	2-7
2.5.4	RF-574 Option	2-7
2.5.5	RF-550 with RF-794RE or RF-576	2-7
2.5.6	RF-550 Internal Strapping Option	2-7
2.6	RF-550 with FSK Converter	2-9
2.7	Mounting	2-9
2.8	Cables	2-9
	PART 3 OPERATION	
3.1	General	3-1
	PART 4 FUNCTIONAL DESCRIPTION	
4.1	General	4-1
4.2	Input Filter Assembly	4-1
4.3	RF/IF Assembly	4-1
4.4	IF Filter Assembly	4-1
4.5	IF Amplifier Assembly	4-2
4.6	Audio Output Assembly	4-2
4.7	Audio Amplifier Monitor Assembly	4-2
4.8	Synthesizer	4-2
4.9	Automatic Frequency Control (AFC)	4-5
4.10	Control Interface	4-6
4.11	Display	4-6

TABLE OF CONTENTS (Cont)

Paragraph		Page
	PART 5 MAINTENANCE	
5.1	Fault Isolation	5-1
5.2	PW Board Repairs	5-1
5.2.1	MOS-FET Replacement	5-2
5.3	Conversion Between dBm and Volts RMS	5-5
5.4	Mixers/Injection Level	5-5
5.5	Test Adapters	5-5
5.6	Test Point Information	5-5
5.7	Logic Interpretation	5-6
5.8	Integrated Circuits and Mini-Modules	5-9
	PART 6 CHASSIS AND FRONT PANEL	
6.1	General	6-1
6.2	Front Panel and Chassis Component Locations	6-1
6.3	Frequency Control Switches	6-1
6.4	Meter Calibrate PW Board	6-1
6.5	Display PW Board	6-2
6.6	Mother Board, A2A6A11	6-3

LIST OF TABLES

Table		Page
1-1	Expanded or Modified Capability Options	1-4
1-2	Installation or Mounting Variation Options	1-5
1-3	Peripheral Options	1-6
2-1	RF-550 Rear Panel Terminal Board In/Out Interface	2-3
2-2	RF-550 Rear Panel Remote Connector In/Out Interface	2-3
2-3	Calculation of Doublet Antenna Element Lengths	2-5
2-4	RF-550 Internal Strapping Options	2-9
2-5	RF-550 Systems Cabling	2-11
3-1	Operating Instruction for All Receive Modes	3-3
3-2	RF-550 Controls and Indicators	3-5
5-1	Troubleshooting	5-3
5-2	Conversion of dBm to Volts RMS Across 50 Ohms	5-6
5-3	List of IC's Used in the RF-550	5-10
6-1	Binary Code Vs. Switch Position	6-1
6-2	Parts List	6-4
6-3	Index to Manufacturer Codes	6-8

LIST OF ILLUSTRATIONS

Figure		Page
1-1	RF-550 MF/HF Independent Sideband Receiver in Typical Equipment Configurations	1-1
2-1	RF-550 Input and Output Connections	2-2
2-2	Typical Doublet Antenna Installations	2-6
2-3	RF-550 Standard Receiver System	2-7
2-4	RF-572 Option, System Cabling	2-7
2-5	RF-573 Option, System Cabling	2-7
2-6	RF-574 Option, System Cabling	2-8
2-7	RF-550/RF-794RE System Cabling	2-10
2-8	RF-550/RF-576 System Cabling	2-10
2-9	RF-550/FSK Converter System Cabling	2-11
2-10	RF-550 Desk Mounting Dimensions	2-12
2-11	RF-550 Standard Rack/Stack Mounting	2-13
3-1	RF-550 Front Panel Controls and Indicators	3-1
3-2	Standard and Optional Mode and Monitor Select Switch Configurations	3-2
4-1	Frequency Synthesizer Block Diagram	4-3
5-1	Effect of Injection Level on Conversion Loss	5-5
5-2	Test Adapter Cable Fabrication	5-6
5-3	PWB Test Point Data Summary	5-7
6-1	RF-550 Component Locations	6-11
6-2	Front Panel Interconnection Diagram	6-13
6-3	Meter Calibrate PWB, Component Locations	6-19
6-4	Meter Calibrate PWB Schematic Diagram	6-19
6-5	Display PWB Component Locations	6-21
6-6	Display PWB Schematic Diagram	6-21
6-7	Mother Board Schematic Diagram	6-23
6-8	Chassis Interconnection Diagram	6-27

ABOUT THIS MANUAL

This technical manual provides complete user information for RF-550 MF/HF Independent Sideband Communications Receivers having serial numbers of 402 or higher. For user information on Receivers with serial numbers of 401 or lower, contact Harris Corporation, RF Communications Division, 1680 University Avenue, Rochester, New York, U.S.A. 14610.

The manual is divided into sections as shown below. Section 1 contains general information and instructions applicable to all assemblies. The remaining sections provide specific instructions for individual assemblies.

RF-550 MANUAL CONTENTS

SECTION		TITLE
Section 1.	Part 1	Introduction
	Part 2	Installation and Interface Data
	Part 3	Operation
	Part 4	Functional Description
	Part 5	Maintenance
	Part 6	Chassis and Front Panel
Section 2.	A2A3	Power Supply Assembly
Section 3.	A2A4	Input Filter Assembly
Section 4.	A2A5	RF/IF Assembly
Section 5.	A2A6A1	Audio Amplifier Monitor Assembly
Section 6.	A2A6A2	USB/LSB Audio Output Assembly
	A2A6A3	UUSB/LLSB Audio Output Assembly
Section 7.	A2A6A4	AFC, Phase Detector Assembly
	A2A6A5	AFC, IF Amplifier Assembly
Section 8.	A2A6A6	LLSB IF Amplifier Assembly
	A2A6A7	LSB IF Amplifier Assembly
	A2A6A8	USB IF Amplifier Assembly
	A2A6A9	UUSB IF Amplifier Assembly
Section 9.	A2A6A10	IF Filter Assembly
Section 10.	A2A7	Frequency Standard Assembly
Section 11.	A2A8	High Band PLL Assembly
Section 12.	A2A9	Control I PWB Assembly
	A2A10	Control II PWB Assembly
	A2A11	Frequency Control, 10/1 MHz PWB Assembly
	A2A12	Frequency Control, 100/10/1 kHz PWB Assembly
Section 13.	A2A13	Subcarrier Generator Assembly
Section 14.	A2A14	Low Band PLL Assembly
Section 15.	A2A15	VFO/BFO Translator Assembly

RF-550 RECEIVER

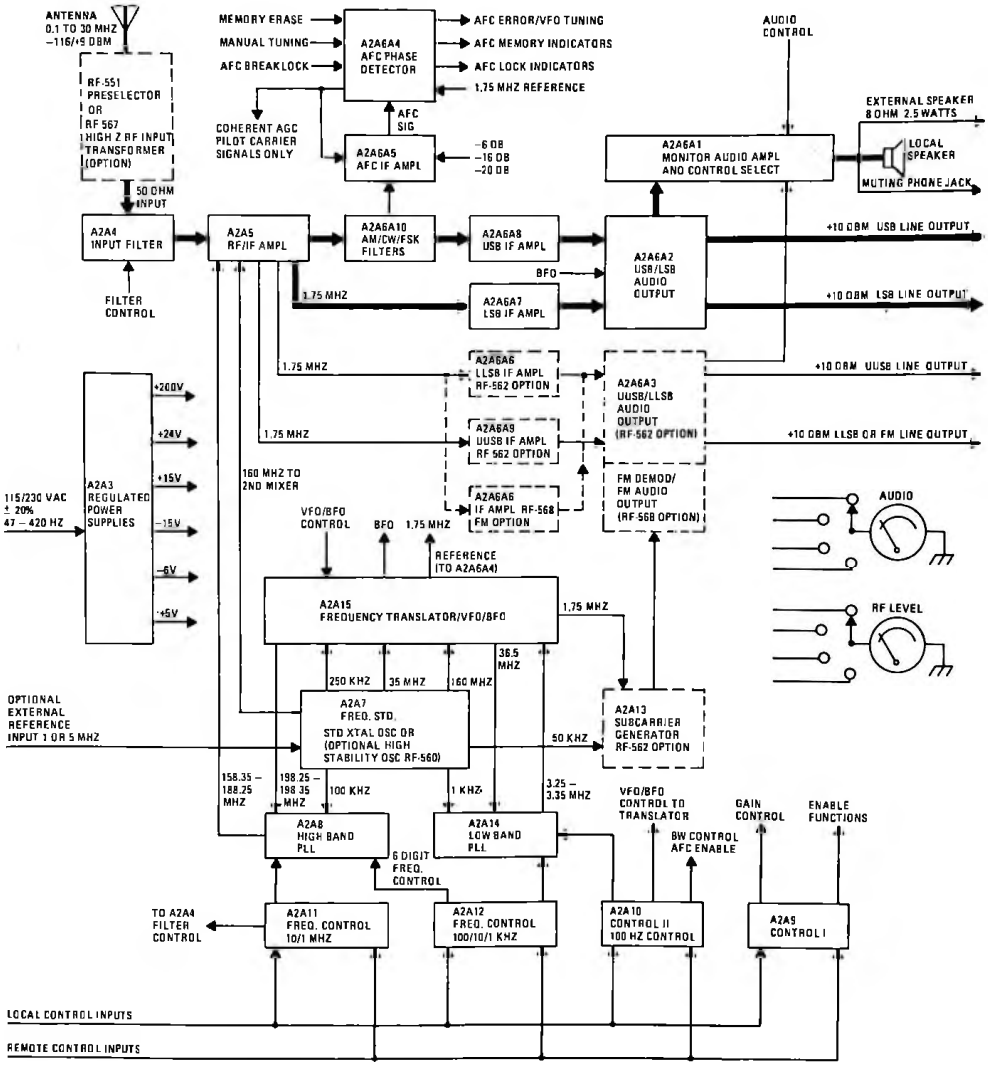

RF-550 SPECIFICATIONS

Frequency Range 0.1 to 30 MHz, in synthesized 100 Hz increments plus VFO.

Frequency Display 6 digit electronic display.

Frequency Stability $\pm$ 1 part in 10^6 – standard with TCXO.
$\pm$ 1 part in 10^6 – optional with RF-560 high stability oven controlled oscillator. Capable of being driven from either a 1 MHz or 5 MHz external standard.

VFO Mode Selectable ON/OFF. Continuous tuning range $\pm$ 1000 Hz calibrated in 100 Hz increments.

BFO Mode Selectable ON/OFF. Continuous tuning range $\pm$ 1000 Hz calibrated in 100 Hz increments.

Phase Jitter Less than 3° rms for 10 ms averaging time.

Receive Modes CW (A1), AM (A3), USB (A3J or A3A), LSB and 2 channel ISB (A3B) are standard. Optional modes: 4 channel ISB (RF-562) or $\pm$ 8 kHz deviation FM (F3) (RF-568). Radio teletype (F1) and facsimile (F4) modes are available with an external demodulator.

Sensitivity CW: 0.15 uV Maximum
AM: 1.5 uV Maximum
USB, LSB, ISB: 0.35 uV Maximum
} For 10 dB $\frac{S+N}{N}$ (Note: Sensitivity reduced below 1.5 MHz).

Noise Figure 13 dB Maximum

Intermodulation Distortion In band third order: –40 dB or better for two equal 0.1V signals falling within 3 kHz sideband filter.
Out of band third order: –80 dB or better for two equal 5 mV signals falling at f_o +30 kHz and f_o + 60 kHz.
Out of band second order: –80 dB or better for two equal 5 mV signals falling at f_o +30 kHz and $2f_o$ +30 kHz.

Cross Modulation –20 dB or better for a 0.1V 30% modulated interfering signal at f_o +30 kHz (desired signal 0.01 V or less).

Maximum Signal Input Receiver protected for inputs to 10V rms.

RF Input Impedance 50 ohm unbalanced (BNC jack).

Automatic Frequency Control For Pilot Carrier Selectable ON/OFF.
Operates with reduced carrier levels of –6 dB, –16 dB, –20 dB, front panel adjustable.
Automatic acquisition range: $\pm$ 50 Hz.
Manual acquisition and tracking range: $\pm$ 1000 Hz.
Lock error: 0 Hz (phase lock to carrier).
Coherent AGC selectable ON/OFF. Front panel indication of carrier lock.

Image And IF Feedthru Responses –100 dB

Spurious Responses –80 dB

RF Gain Control Manual control on front panel (operates in all modes, 125 dB range).
Three position front panel AGC Switch:
1) AGC slow – Attack 10 ms, decay 1 second.
2) AGC fast – Attack 10 ms, decay 0.1 second.
3) AGC OFF.
AF output held constant within 3 dB from 1 uV to 1.0V input signal level.

Audio Outputs For each sideband channel: +10 dBm driving 600 ohm balanced line at 1% distortion (transformer isolated). 600 ohm source impedance (26 dB return loss). Local or remote speaker 2.5 watts at 5% distortion 8 ohms. USB output used for AM and CW modes. 600 ohm local earphone jack, +10 dBm.

IF Filter Bandwidths

STANDARD

Mode	3 dB Bandwidth	3 dB Points
USB	3.2 kHz	+300 to +3500 Hz
LSB	3.2 kHz	–300 to –3500 Hz
AM/CW	0.5 kHz	$\pm$ 250 Hz
	6.0 kHz	$\pm$ 3000 Hz
	20.0 kHz	$\pm$ 10,000 Hz

OPTIONAL

Mode	3 dB Bandwidth	3 dB Points
USB	5.7 kHz	+300 to +6000 Hz
LSB	5.7 kHz	–300 to –6000 Hz

OPTIONAL (Cont)

Mode	3 dB Bandwidth	3 dB Points
RATT (850 Hz Shift)	1.2 kHz	+1400 to +2600 Hz
RATT (170 Hz Shift)	0.4 kHz	+1800 to +2200 Hz
	0.5 dB Bandwidth	**0.5 dB Points**
*UUSB (A2)	2.79 kHz	+3250 to +6040 Hz
*USB (A1)	2.79 kHz	+250 to +3040 Hz
*LSB (B1)	2.79 kHz	–250 to –3040 Hz
*LLSB (B2)	2.79 kHz	–3250 to –6040 Hz

*Filters are delay compensated to provide less than 500 usec differential time delay from 350 to 3040 Hz (referenced to baseband).

Metering RF Input Signal Level: 1 uV to 1 V linear dB scale $\pm$ 3 dB calibration switchable to all sideband channels.
Audio Output Level: –6 to +14 dBm on 600 ohm output lines switchable to all sideband channels.

Diversity Provision AGC voltages with controlled characteristic available from each sideband channel for use in external frequency diversity combiner.
Single combined AGC voltage available for use in external space or polarization diversity combiner.

Remote Control Capability Three position front panel switch selects:
1) Local control
2) Remote control, synthesized frequency only (vernier can be remoted by internal wiring change).
3) Full remote control
Full remote control includes:
– synthesized frequency
– VFO ON/OFF plus analog voltage
– BFO ON/OFF plus analog voltage
– AGC speeds
– receiver modes
– AFC controls and indicators

Temperature –10 to +55°C operational –40 to +70°C storage

Humidity 0 to 95%

Size And Weight

STANDARD RACK MOUNT
width 19 inches (48.3 cm)
height 7 inches (17.8 cm)
depth 18.5 inches (47.0 cm)
weight 45 pounds (20.4 kg)

DESK MOUNT CASE
width 19.5 inches (49.5 cm)
height 7.5 inches (19.1 cm)
depth 18.5 inches (47.0 cm)
weight 48 pounds (21.8 kg)

Power Requirements 115/230 Vac $\pm$ 10%, 47 to 400 Hz, 75 watts basic receiver, 90 watts with full options.

Note: Signal levels are given in terms of signal generator voltage delivered to a 50 ohm load. Thus, in the terms used, 1.0 uV is equivalent to –107 dBm available signal generator power.

OPTIONAL EQUIPMENT AND SPARE PARTS

Listed below are optional accessories and spare parts kits available from Harris Corporation for use with the equipment described in this manual. To order any of these items, or to obtain more information concerning them, write to:

HARRIS CORPORATION
RF Communications Division
Rochester, New York
14610 U.S.A.
ATTN: MARKETING DEPARTMENT

or call: (716) 244-5830, and ask for Marketing Department.

When placing an order, please specify the model number.

We will be happy to answer any questions you may have regarding these or any other items we manufacture. We also welcome your evaluation of our equipment and suggestions for other accessory items or spare parts.

HARRIS CORPORATION
RF Communications Division

OPTIONAL EQUIPMENT FOR RF-550 RECEIVER

Model	Name	Descriptions	Use
RF-560	High Stability Frequency Standard	Provides 1 part in 10^8 stability. 1 MHz oscillator operates in an oven with proportional temperature control.	Plug-in unit mounts internally in place of standard TCXO.
RF-561	Delay Compensated ISB Filter	Delay compensated USB and LSB filters provide less than 500 micro-sec. time delay differential from 350 to 3040 Hz (referenced to baseband). Amplitude response is held to within 0.5 dB from 250 to 3040 Hz.	Plug-in option replaces related IF amplifier PW board assemblies with units incorporating delay compensated filters. See Section 8.
RF-562	Four Channel ISB	Adds four channel ISB capability to the basic RF-550 Receiver. Channel filters are are delay compensated for high speed data applications (same baseband characteristics as RF-561).	Plug-in option adds subcarrier assembly, delay compensated IF amplifier PW board assemblies in all positions (see Section 8), and a UUSB/LLSB Audio Output PW Board Assembly (see Section 6).

OPTIONAL EQUIPMENT FOR RF-550 RECEIVER (continued)

Model	Name	Description	Use
RF-563	Wideband ISB Filter	Provides 5.7 kHz bandwidth. Amplitude response is within 3 dB from 300 to 6000 Hz (referenced to baseband).	Standard USB and LSB IF amplifiers are replaced with PW board assemblies using wideband filters. Note that wideband characteristics make this option incompatible with 4 ISB.
RF-564	850 Hz Shift RATT Filter	Provides an additional USB filter for optimum reception of 850 Hz shift radio teletype. Amplitude response is within 3 dB from 1400 to 2600 Hz (referenced to baseband).	Option adds 1920-2080-3 type PW board in place of standard 1920-2080-1 board installed as A2A6A10. See Section 9. Additional switch position included on RECEIVE MODE Switch.
RF-565	170 Hz Shift RATT Filter	Provides additional USB filter for optimum reception of 170 Hz shift radio teletype. Amplitude response within 3 dB from 1800 to 2200 Hz (referenced to baseband).	Option adds 1920-2080-2 type PW board in place of standard 1920-2080-1 board installed as A2A6A10. See Section 9. Additional switch position included on RECEIVE MODE Switch.
RF-566	Wide and Narrow Band RATT Filter Option	Provides both wide and narrow band RATT filters included separately in the RF-564 and and RF-565 options.	Option adds 1920-2020 type PW board in place of standard 1920-2080-1 board installed as A2A6A10. See Section 9. Additional switch position included on RECEIVE MODE Switch.
RF-567	High Z RF Input Transformer	Enhances reception with electrically short untuned antennas.	Mounts on rear of RF-550 and in series with the antenna input.
RF-583	Step Tuning Frequency Control	Provides step tuning from the front panel paddle switches.	Electronic tuning of the RF-550.

INSTALLATION OR MOUNTING VARIATION OPTIONS FOR THE RF-550 RECEIVER

Model	Name	Description
RF-569	Desk Top Case	Enclosed case for mounting receiver in "Desk Top" applications. Dimensions 7.5 in. (19 cm) high x 19.5 in. (50 cm) wide x 18.5 in. (47 cm). deep.
RF-570	Stack Mounting Brackets	For use in standard stacking applications with RF-130 transmitter.
RF-571	Slides for Rack Mount Installations	Permits extension of RF-550 on slides for ready access in rack mount installations.
RF-572	RF-130 Interconnection Kit	RF-550 to RF-130 interconnection kit. Provides for transceiver type operation with frequency control of the RF-550 from the RF-130.
RF-573	RF-551/RF-552 Interconnection Kit	RF-550 to RF-551/RF-552 Remote Controlled Preselector. Provides for automatic tuning of the RF-551/RF-552 from RF-550 frequency information. Not required with RF-551 operated in manually tuned mode.
RF-574	Remote Control Interconnection Kit	Interconnects the RF-550 with RF-130 through the RF-784, RF-790, or RF-794 Remote Control systems. Provides full transceiver operation and remote control capabilities.

PERIPHERAL OPTIONS FOR THE RF-550 RECEIVER

Model	Name	Description
RF-551/ RF-552	Preselector	Four-pole, automatically tuned preselector/pre-amplifier with 2% 3 dB bandwidth covering 2 to 30 MHz. For use in critical duplex applications. External unit.
RF-518	Headset	High quality headset recommended for private listening in areas with high audio noise levels.
RF-577	Preset/Search Frequency Control	The RF-577 Preset/Search Frequency Control adds a 99 channel preset capability to the RF-550 and includes complete mode select capability in addition to the variable rate scan feature. Control distances up to 300 feet can be accommodated through a multiconductor cable which also supplies power to the RF-577
RF-3300 (series)	RATT Demodulators	Radio Teletype (RATT) demodulators for conversion of audio FSK signals to teletype keying. Available in a wide series of shifts and keying interfaces. Externally mounted.

SPARE PARTS KITS FOR THE RF-550 RECEIVER

Kit	Name	Description
RF-550/ RSK	Running Spares Kit	Contains items readily replaced in field operation by the operator, such as fuses, lamps, etc. Each kit will generally support a single equipment for two to four years.
RF-550/ SSK	Site Spares Kit.	Designed for quick elimination of "down time". Contains a complete set of assemblies and subassemblies, piece parts for those items impractical to repair by assembly replacement, and a common hardware kit. Each kit will generally support up to 5 equipments for two to four years.
RF-550/ ARK	Assembly Repair Kit	Contains all parts required to repair defective assemblies and subassemblies. Well-equipped service shop required for effective utilization. Each kit will generally support a Site Spares Kit for two to four years.
RF-550/ OSK	Operational Spares Kit	Contains only those loose components which have the highest chance of failing. Designed for troubleshooting by a competent technician with access to test equipment. Kit should not be considered a substitute for the other kits.
RF-550/ MRK	Maintenance Repair Kit	Contains extender boards, extender cables, tuning tools, and other special items required for maintaining the equipment.

PART 1

INTRODUCTION

1.1 GENERAL DESCRIPTION

The RF-550 MF/HF Independent Sideband Receiver covers the 100 kHz to 30 MHz frequency range in synthesized 100 Hz increments, and is expressly designed for reduced and suppressed carrier applications including voice, data, and facsimile signals. The RF-550 is shown in two typical equipment configurations in figure 1-1. A unique Automatic Frequency Control (AFC) system maintains zero frequency error when the RF-550 is used in reduced carrier applications.

Standard features of the RF-550 include remote control, variable bandwidth control, calibrated BFO, calibrated VFO tuning, and diversity reception. A precisely controlled AGC system provides accurate readout of signal levels. Delay compensated filters for high speed data applications are optionally available.

The RF-550 is frequently used with the RF-130 Synthesized HF Transmitter. Synthesizer modules and sideband filters in these two units are interchangable.

FEATURES:

- 100 kHz to 30 MHz
- 4-ISB Capability
- AFC On Pilot Carrier
- Coherent AGC

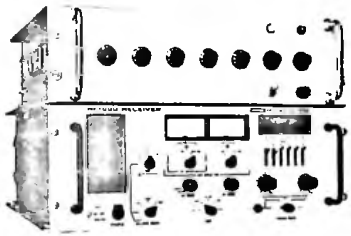

RF-550 RECEIVER WITH RF-551 PRESELECTOR (LEFT) AND IN "STACK" CONFIGURATION WITH RF-130 TRANSMITTER.

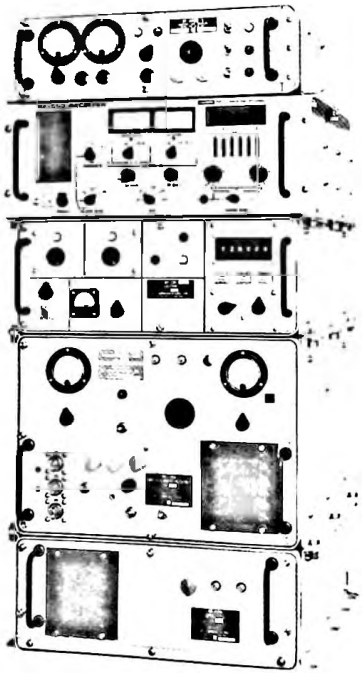

Figure 1-1. RF-550 MF/HF Independent Sideband Receiver in Typical Equipment Configurations

1.2 FREQUENCY TUNING AND STABILITY

The RF-550 tunes from 100 kHz to 30 MHz in 100 Hz increments with six decade switches. A six digit electronic display provides frequency readout in both local and remote modes of operation. A VFO mode provides ± 1 kHz continuous tuning to complement the synthesized steps. CW reception is enhanced by BFO tuning ± 1 kHz about the indicated receive frequency.

RF-550 tuning accuracy is determined by high stability reference oscillator. The basic receiver uses a Temperature Compensated Crystal Oscillator (TCXO) with a stability of 1 part in 10^6 per day. The same stability applies over the rated temperature and power line voltage ranges. For critical applications, the optional RF-560 Temperature Controlled 1 MHz Frequency Standard replaces the TCXO. The corresponding RF-550 stability with the RF-560 option is 1 part in 10^8. An external input also permits operation from an external frequency standard (either 1 MHz or 5 MHz).

For reception of reduced carrier sideband signals, an AFC mode of operation automatically locks the RF-550 to the reduced carrier with zero frequency error. Capture range is ± 50 Hz and hold-in range is ±1000 Hz. The phase-lock AFC system maintains lock at carrier levels down to at least 0.08 uV.

1.3 RECEIVING MODES

The standard RF-550 has five receiving modes: CW, AM, USB, LSB and two-channel ISB. CW reception is directly at the indicated receive frequency, with a variable BFO for optimum signal readability. The standard SSB filters have a 3 dB bandwidth of 3.2 kHz. Sideband filter bandwidth options include delay compensated 2.8 kHz filters and 5.7 kHz wideband filters.

Additional modes available include the RF-562 Four-Channel ISB option (subcarriers of 6250 or 6290 Hz available), and special USB filter options for optimum reception of 850 Hz and 170 Hz shift Radio Teletype (RATT).

1.4 AUTOMATIC GAIN CONTROL

Automatic Gain Control (AGC) maintains demodulated outputs constant within 3 dB for RF signals ranging from 1 uV to 1.0 volt. Shaping circuitry provides linear AGC/RF characteristics. A front panel meter indicates RF signal level within ± 3 dB over a 120 dB range (1 uV to 1 volt). The AGC voltage is also available externally for use in diversity operation.

A front panel AGC switch selects one of five AGC modes. (1) In the OFF mode, RF-550 gain is manually adjusted using the RF Gain control. (2) The FAST mode provides fast AGC attack and a moderately fast decay time (0.1 second). (3) The SLOW mode provides fast AGC attack and a slow decay time (1 second). (4) The COHERENT mode is available with AFC operation; in this mode, AGC voltage is derived coherently from the pilot carrier and provides gain control completely independent of signal modulation. (5) The EXTERNAL mode provides for receiver gain control by an external dc voltage input for use in diversity operation.

1.5 SPURIOUS PERFORMANCE

The RF-550 provides nearly spurious free performance. A double conversion design employs a first intermediate frequency (IF) of 158.25 MHz, with crystal filtering near the input of the RF-550. The second IF is 1.75 MHz, an optimum frequency for the design of delay compensated sideband filters. Image and IF spurious responses are suppressed by more than 100 dB. All other spurious responses are held below 80 dB.

The front end design uses a low noise preamplifier with a very wide dynamic range. The basic RF-550 contains an internal preselector consisting of ten half-octave bandpass filters, automatically switched at appropriate intervals through the 2 to 30 MHz range. The filters utilize a fifth order elliptic design. At one octave removed from band centers rejection is 60 dB. A fifth order elliptic low-pass filter (2 MHz cutoff) precedes the amplifier in the 100 kHz to 560 kHz frequency range.

For duplex applications with nearby transmitters operating within 5 percent of received frequencies, the RF-551 Preselector should be used. The externally mounted RF-551 is a four-pole, high Q bandpass filter, which automatically tracks the RF-550 frequency.

Internally generated spurious signals are held to an equivalent input level of 0.5 uV or less through extensive use of internal shielding and filtering.

1.6 REMOTE CONTROL

The RF-550 provides remote control capability for frequency, mode, bandwidth and AGC selection. A front panel switch establishes the control point: LOCAL, FREQUENCY REMOTE (only) or FULL REMOTE. Logic interfaces are TTL compatible; analog voltages control the VFO and BFO. Full compatibility is maintained with the RF-130 Transmitter and the RF-551 Preselector.

1.7 RELIABILITY AND MAINTENANCE

The RF-550 is a fully solid state design with all components substantially derated for long term dependability. Medium scale integrated (MSI) circuitry is used extensively in the receiver frequency synthesizer to enhance reliability.

Modular plug-in design permits maintenance by personnel with limited training. The standard receiver has 7 plug-in modules and 11 plug-in printed wiring boards. The synthesizer modules are directly interchangeable with the RF-130 transmitter modules, permitting common logistics support for both the RF-130 and the RF-550.

1.8 INTERFACE CAPABILITY

The standard RF-550 interfaces with a family of state-of-the-art units to satisfy individual systems requirements. Typical applications are summarized in this paragraph. Additional specific information is available from HARRIS CORPORATION, RF Communications Division, 1680 University Avenue, Rochester, N.Y. 14610, USA • Phone 716-244-5830 • Cable: RFCOM: Rochester, N.Y. • TWX 510-253-7469 • TELEX 978464.

- RF-130 Transmitter: Key line interface with appropriate muting for simplex and half duplex transceiver type operation. Remote synthesized frequency control interfaces directly with RF-130 remote output for simplex transceiver operation, with the RF-130 exercising frequency control of the system.

- RF-551/RF-552 Preselector: The RF-551 is slaved to the RF-550 remote output. The RF-551 is remotely tuned using the synthesized BCD frequency control from the RF-550.

- RF-550 Receiver: Interfaces with a second RF-550 to provide frequency control for diversity reception applications.

1.9 OPTIONS AND ACCESSORIES

The standard RF-550 provides a completely self-contained 2 ISB receiving system.

Tables 1-1 through 1-3 show the family of options available.

TABLE 1-1. EXPANDED OR MODIFIED CAPABILITY OPTIONS

OPTION	TITLE	FUNCTIONAL DESCRIPTION	REMARKS
RF-560	High Stability Frequency Standard	Provides 1 part in 10^8 stability. 1 MHz oscillator operates in an oven with proportional temperature control.	Plug-in unit mounts internally in place of standard TCXO.
RF-561	Delay Compensated ISB Filter	Delay compensated USB and LSB filters provide less than 500 usec time delay differential from 350 to 3040 Hz (referenced to baseband). Amplitude response is held to within 0.5 dB from 250 to 3040 Hz.	Plug-in option replaces related IF amplifier pw board assemblies with units incorporating delay compensated filters. See Section 8.
RF-562	Four Channel ISB	Adds 4 channel ISB capability to basic RF-550 Receiver. Channel filters are delay compensated for high speed data applications (same baseband characteristics as RF-561). 6250 or 6290 Hz subcarrier provided.	Plug-in option adds subcarrier generator assembly, delay compensated IF amplifier pw board assemblies in all positions (see Section 8), and a UUSB/LLSB Audio Output PW Board Assembly (see Section 6).
RF-563	Wideband ISB Filter	Provides 5.7 kHz bandwidth. Amplitude response is within 3 dB from 300 to 6000 Hz (referenced to baseband).	Standard USB and LSB IF amplifiers are replaced with pw board assemblies using wideband filters. Note that wideband characteristics make this option incompatible with 4 ISB.
RF-564	850 Hz Shift RATT Filter	Provides an additional USB filter for optimum reception of 850 Hz shift radio teletype. Amplitude response is within 3 dB from 1400 to 2600 Hz (referenced to baseband).	Option adds 1920-2080-3 type pw board in place of standard 1920-2080-1 board installed as A2A6A10. See Section 9. Additional switch position included on RECEIVE MODE Switch.
RF-565	170 Hz Shift RATT Filter	Provides additional USB filter for optimum reception of 170 Hz shift radio teletype. Amplitude response within 3 dB from 1800 to 2200 Hz (referenced to baseband).	Option adds 1920-2080-2 type pw board in place of standard 1920-2080-1 board installed as A2A6A10. See Section 9. Additional switch position included on RECEIVE MODE Switch.

TABLE 1-1. EXPANDED OR MODIFIED CAPABILITY OPTIONS (Cont)

OPTION	TITLE	FUNCTIONAL DESCRIPTION	REMARKS
RF-566	Wide and Narrow Band RATT Filter Option	Provides both wide and narrow band RATT filters included separately in the RF-564 and RF-565 options. (Not available with RF-562, 4 ISB option).	Option adds 1920-2020 pw board in place of standard 1920-2080-1 board installed as A2A6A10. See Section 9. Additional switch positions included on RECEIVE MODE Switch.
RF-567	High Z RF Input Transformer	Enhances reception with electrically short untuned antennas.	Mounts on rear of RF-550 and in series with the antenna input.
RF-582	1.7 kHz Shift Ratt Filter	Provides additional USB filter for optimum reception of 1.7 kHz shift radio teletype. Amplitude response within 3 dB from 1537 to 1863 Hz (Reference to Base Band).	Option adds 1920-2080-4 type PW board in place of standard 1920-2080-1 Bd. installed as A2A6A10. See Section 9. Additional switch position included on Receive Mode Switch.

TABLE 1-2. INSTALLATION OR MOUNTING VARIATION OPTIONS

OPTION	TITLE	DESCRIPTION
RF-569	Desk Top Case	Enclosed case for mounting receiver in "Desk Top" applications. Dimensions 7.5 in. high (19 cm) x 19.5 in. wide (50 cm) x 18.5 in. deep (47 cm).
RF-570	Stack Mounting Brackets	For use in standard stacking applications with RF-130 transmitter.
RF-571	Slides for Rack Mount Installations	Permits extension of RF-550 on slides for ready access in rack mount installations.
RF-572	RF-130 Interconnection Kit	RF-550 to RF-130 interconnection kit. Provides for transceiver type operation with frequency control of the RF-550 from the RF-130.
RF-573	RF-551/RF-552 Interconnection Kit	RF-550 to RF-551/RF-552 Remote Controlled Preselector. Provides for automatic tuning of the RF-551/RF-552 from RF-550 frequency information. Not required with RF-551 operated in manually tuned mode.
RF-574	Remote Transceiver Control Interconnection Kit	Interconnects the RF-550 with RF-130 through the RF-784, RF-790, or RF-794 Remote Control systems. Provides full remote control transceiver capabilities.

TABLE 1-3. PERIPHERAL OPTIONS

OPTION	TITLE	DESCRIPTION
RF-551/ RF-552	Preselector	Four-pole, automatically tuned preselector/pre-amplifier with 2% 3 dB bandwidth covering 2 to 30 MHz. For use in critical duplex applications. External unit.
RF-518	Headset	High quality headset recommended for private listening in areas with high audio noise levels.
RF-577	Preset/Search Frequency Control	The RF-577 Preset/Search Frequency Control adds a 99 channel preset capability to the RF-550 and includes complete mode select capability in addition to the variable rate scan feature. Control distances up to 300 feet can be accommodated through a multiconductor cable which also supplies power to the RF-577
RF-3300 (series)	RATT Demodulators	Radio Teletype (RATT) demodulators for conversion of audio FSK signals to teletype keying. Available in a wide series of shifts and keying interfaces. Externally mounted (series also includes modulators).

PART 2

INSTALLATION AND INTERFACE DATA

2.1 POWER REQUIREMENTS

The RF-550 requires 115/230 Vac ± 20%, 47 to 400 Hz, single phase power, at 75W in the standard configuration. See table 1 in section A2A3 for proper power supply range switch setting. With full options, power consumption is approximately 90W. A 6 foot (1.8m) power cord equipped with a 115 Vac mating plug is supplied with the unit. The plug can be modified as required to fit specific user requirements.

2.2 SITE SELECTION

Refer to paragraph 1.9 and table 1.2 for installation and packaging options. The RF-550 provides specified performance in any environment within the temperature range of -10° to +55°C and up to 95 percent humidity. Consider the following factors when determining the operating location for the RF-550:

- Ease of operation and visibility of controls
- Relation to other units
- Power, control, and output interfaces
- Environmental considerations for unit and operator

2.3 INTERCONNECTION REQUIREMENTS

RF-550 input and output connections are shown and their uses explained in figure 2-1. Tables 2-1 and 2-2 give detailed interconnection information. The RF-550 is a complete receiver independent of other equipment, and requires only the appropriate power and antenna connections. The power cord is supplied. Make the 50-ohm antenna connection to BNC connector J1. All other RF-550 connectors are used to expand and integrate features of the receiver or system. Cabling and connector information for both standard and optional configurations are given in paragraph 2.8.

2.4 ANTENNAS AND TRANSMISSION LINES

Antennas and transmission lines are integral parts of any receiver system. An inadequate antenna system is the most frequent cause of poor receiver performance. To ensure good system performance and reliability, verify that the antenna system conforms to the basic rules discussed in the following paragraphs.

The RF-550 is designed to operate with any 50-Ohm resistive antenna system. The antenna may be a non-resonant type, such as a whip or long wire, tuned by an antenna coupler. It may be a resonant dipole antenna, cut for a specific operating frequency, or a broadband antenna, such as a log periodic or discone. For fixed base station operation, either a non-resonant whip or long wire antenna tuned by an antenna coupler is recommended. The long wire antenna is more efficient and can be used more effectively for base station to base station operation where its directive characteristics are employed to advantage. The whip has omnidirectional characteristics, is smaller, and is somewhat less efficient. The half-wave doublet antenna is an efficient, easily constructed, resonant antenna. The efficiency

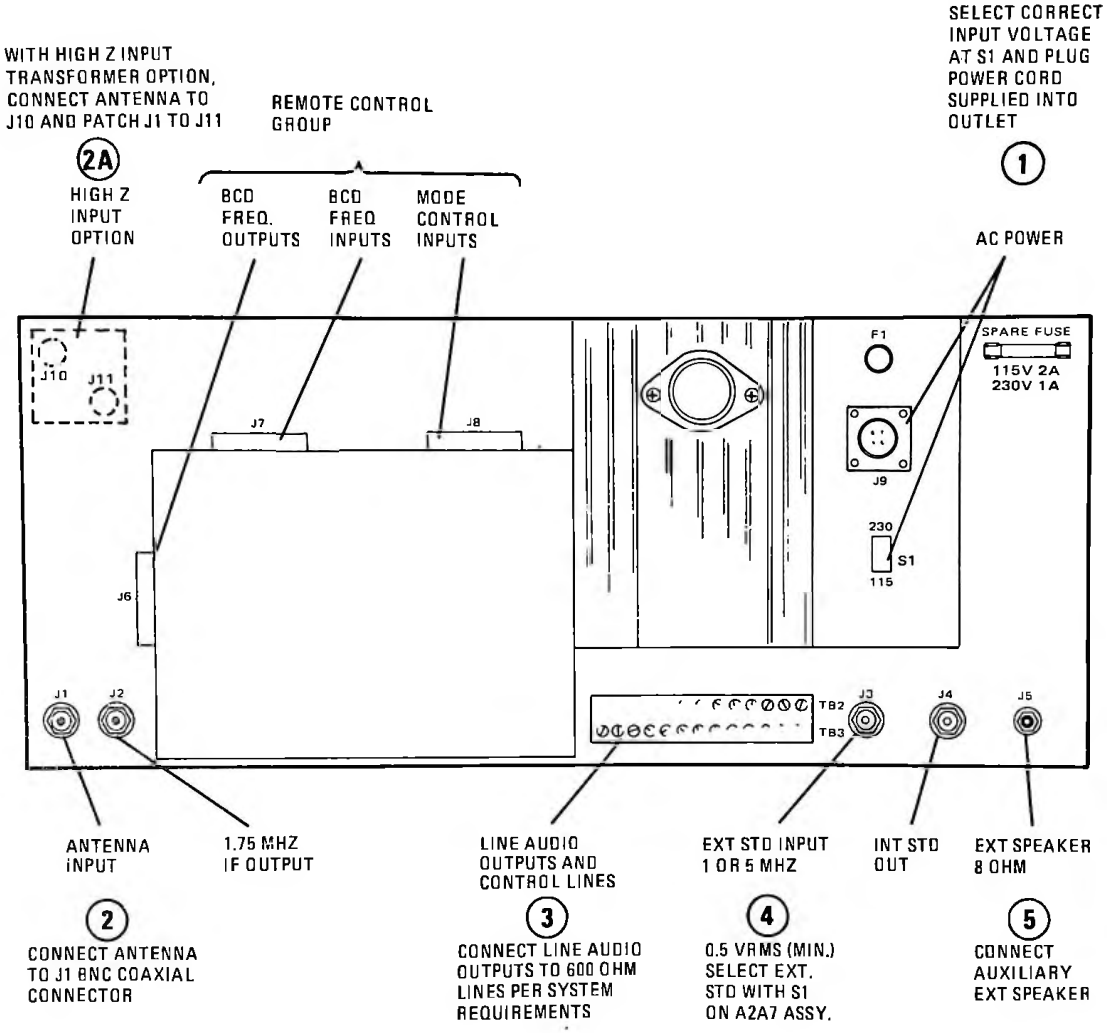

Figure 2-1. RF-550 Input and Output Connections

TABLE 2-1. RF-550 REAR PANEL TERMINAL BOARD IN/OUT INTERFACE

PIN	FUNCTION (1)
TB2-1	UUSB LINE OUT
TB2-2	UUSB LINE CT
TB2-3	UUSB LINE OUT
TB2-4	USB LINE OUT
TB2-5	USB LINE CT
TB2-6	USB LINE OUT
TB2-7	LSB LINE OUT
TB2-8	LSB LINE CT
TB2-9	LSB LINE OUT
TB2-10	LLSB LINE OUT
TB2-11	LLSB LINE CT
TB2-12	LLSB LINE OUT

PIN	FUNCTION
TB3-1	MUTE CONTROL (TTL compatible, gnd to mute)
TB3-2	GND
TB3-3	EXT. AUDIO INPUT (600 ohm input impedance)
TB3-4	GND
TB3-5	EXT. AGC INPUT (3) (source impedance<2K required)
TB3-6	GND
TB3-7	GND
TB3-8	USB AGC OUT (2) (10K source impedance)
TB3-9	UUSB AGC OUT (2) (10K source impedance)
TB3-10	LSB AGC OUT (2) (10K source impedance)
TB3-11	LLSB AGC OUT (2) (10K source impedance)
TB3-12	COMBINED AGC OUT (2) (10K source impedance)

(1) Line source impedance 600 ohms line-to-line.
(2) AGC out 0 to +9V; 9V corresponds to maximum attenuation.
(3) AGC input 0 to +9V.

TABLE 2-2. RF-550 REAR PANEL REMOTE CONNECTOR IN/OUT INTERFACE

CONNECTOR AND PIN	FUNCTION
J6-1 thru -22	Remote BCD Frequency Output (TTL compatible, fan out to 5 standard TTL loads, no diode protection)
J6-23	Remote Frequency Enable Indicator (+5V when remote selected)
J6-24	GND
J6-25 thru -36	N.C.
J7-1 thru -22	Remote BCD Frequency Input (TTL compatible, diode protected positive true logic. Should be driven by open collector buffers)
J7-23	Frequency/Transceiver Remote Enable (+5V when remote selected)
J7-24	GND
J7-25	Remote Mode A
J7-26	Remote Mode B
J7-27	Remote Mode C
J7-28	+5Vdc used to power RF-576 (maximum load 200 mA)

TABLE 2-2. RF-550 REAR PANEL REMOTE CONNECTOR IN/OUT INTERFACE (Cont)

CONNECTOR AND PIN	FUNCTION
J7-29 thru -34	N.C.
J7-35	−15V (not fused, maximum load 200 mA used to power RF-577)
J7-36	+15V (not fused, maximum load 200 mA used to power RF-577)
J8-1	Remote Mode A
J8-2	Remote Mode B
J8-3	Remote Mode C
J8-4	Remote AGC A
J8-5	Remote AGC B
J8-6	Remote AGC C
J8-7	Remote Tuning A
J8-8	Remote Tuning B
J8-9	Remote Tuning C
J8-10	N.C.
J8-11	Remote RF Gain Input 0 to +9V (100K input Z, 0 to +9V)
J8-12	Remote 500 Hz BW (AM or CW)
J8-13	Remote 6 kHz BW (AM or CW)
J8-14	N.C.
J8-15	N.C.
J8-16	N.C.
J8-17	Remote Break Lock (+15V to activate)
J8-18	Remote BFO Analog Input (100K input Z, −6 to +6V)
J8-19	Remote VFO Analog Input (100K input Z, −6 to +6V)
J8-20	Full Remote Enable Indicator (+5V when selected)
J8-21	Remote AFC Lock Indicator (low indicates lock)
J8-22	Remote AFC Memory Indicator (low indicates memory)
J8-23	Remote AFC Memory Disable (+5V disable, 0V enable)
J8-24	GND

NOTE: J8-1 thru J8-9, J8-12, J8-13, J8-17, J8-20 thru J8-22 are TTL compatible positive true logic.

and useability of the doublet, however, are restricted to a narrow band of frequencies within 2.5 percent of the center resonant frequency. Separate doublet antennas must therefore be constructed for each channel if frequencies are separated by more than 2.5 percent of center frequencies.

Broadband antennas, such as the log periodic or discone, provide an efficient impedance match over their specified operating frequency ranges. Broadband antennas eliminate the need for antenna couplers; however, they are more expensive and complex to construct.

Maximum receiver sensitivity is achieved when the antenna input impedance presented at RF INPUT connector J1 is 50 ohms. The use of coaxial cables, such as type RG-58/U terminated with BNC connector, prevents feed-line noise pick-up and provides the proper impedance match. When a long wire antenna of random length is used,

an antenna coupler is required to provide the desired 50-ohm input impedance.

For installations where the antenna can be installed in several locations, considerable advantage can be gained by selecting the site carefully. General rules for antenna site selection are:

- Avoid nearby obstructions such as hills, trees, buildings, and power lines which absorb and reflect radio signals. In particular, avoid obstructions that are in a direct line with the desired directions of reception.
- Some antennas, especially the doublet, are directional and should be oriented for maximum signal gain.
- Reception is generally best at the top of a hill, over level ground, or over water.
- A good earth ground connection is required for good performance.

2.4.1 DOUBLET ANTENNA KITS

Doublet antenna kits, such as the RF-334 and SB-AD, are available from RF Communications. Three basic types of antennas - the horizontal doublet, the inverted V, and the slant wire - can be constructed with these kits. Figure 2-2 shows these three antenna types used in typical installations. Each type of doublet antenna has two legs of equal length, one connected to the center conductor of the coaxial cable and the other connected to the shield. The two legs have a combined electrical length of one-half wavelength (one-quarter wavelength for each leg).

The inverted V and slant wire doublets are useful if the antenna site prohibits the use of the two supports required for a horizontal doublet, or if the supports cannot be located so that the doublet is perpendicular to the direction of the desired transmitted signal. All doublet antennas are directional and provide best response to signals received from directions perpendicular to their lengths. The length of each element of a doublet can be determined from one of the formulas given in table 2-3.

2.5 TYPICAL SYSTEMS

A number of system configurations are possible using the RF-550 and available interface option kits. The following paragraphs describe the standard and optional configurations that are available.

2.5.1 STANDARD RF-550 SYSTEM

Figure 2-3 shows the RF-550 in the standard receiver configuration with no external options. The antenna is not part of the standard equipment supplied.

2.5.2 RF-572 OPTION

Figure 2-4 shows the RF-572 system cabling option. In this configuration the

TABLE 2-3. CALCULATION OF DOUBLET ANTENNA ELEMENT LENGTHS

ANTENNA TYPE	LENGTH OF EACH ELEMENT (FEET)	LENGTH OF EACH ELEMENT (METERS)
Doublet, horizontal or slanted	$\frac{234}{f\ (MHz)}$	$\frac{71.3}{f\ (MHz)}$
Inverted V doublet	$\frac{245}{f\ (MHz)}$	$\frac{74.5}{f\ (MHz)}$

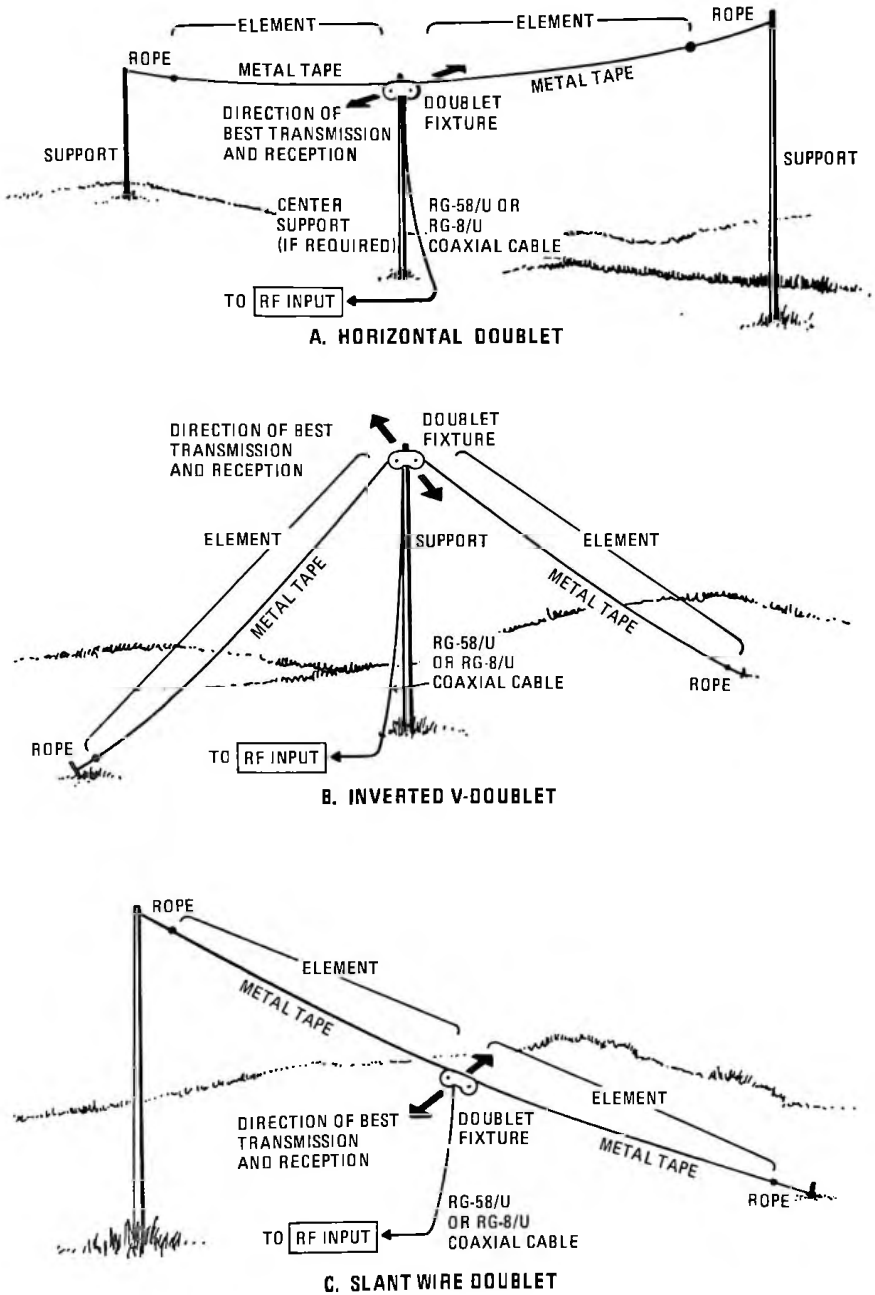

Figure 2-2. Typical Doublet Antenna Installations

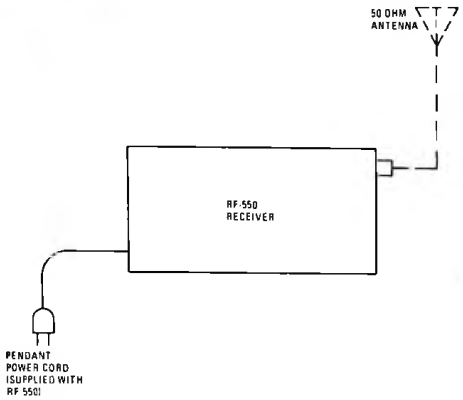

Figure 2-3. RF-550 Standard Receiver System

RF-550 interfaces directly with an RF-130 Transmitter System for simplex operation. The RF-131 Exciter controls the operating frequency of both the transmit and receive systems.

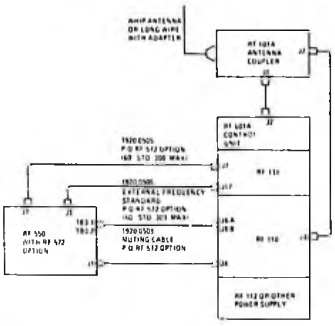

Figure 2-4. RF-572 Option, System Cabling

2.5.3 RF-573 OPTION

Figure 2-5 shows the RF-573 System Cabling option. This option combines the RF-550 Receiver with the RF-551 Preselector and the RF-552 Preselector Remote Control Assembly. In this configuration the RF-550 has a highly selective tuning capability. The RF-552 provides for automatic tuning of the RF-551 from the RF-550. For a detailed description of the RF-551/RF-552 equipment refer to instruction manual 0905-0006.

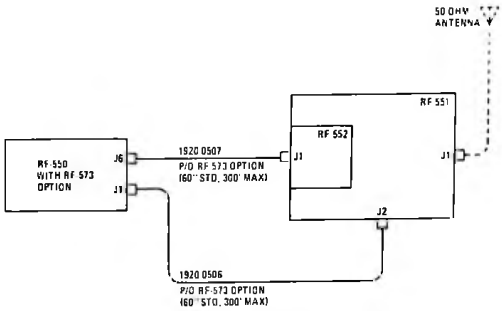

Figure 2-5. RF-573 Option, System Cabling

2.5.4 RF-574 OPTION

Figure 2-6 shows cabling for the RF-574 interface option. The RF-574 interfaces the RF-550 receiver with any of three remote control systems: the RF-784, RF-790, or RF-794. Using this option to integrate and control an RF-550/RF-130 system provides full remote control transceiver operation. Table 2-4 lists RF-550 internal strapping information required for these system options.

2.5.5 RF-550 WITH RF-794RE OR RF-577

The RF-550 may be interfaced with either the RF-794RE or RF-577 using cables supplied with the respective unit. Figures 2-7 and 2-8 show interface cabling for RF-794RE and RF-577 systems, respectively.

2.5.6 RF-550 INTERNAL STRAPPING OPTION

Table 2-4 gives RF-550 strapping information required for the following options:

- Frequency Remote
- Mode Remote
- Local IF BW
- Preset IF BW with CW and AM, 500 Hz - 6 kHz

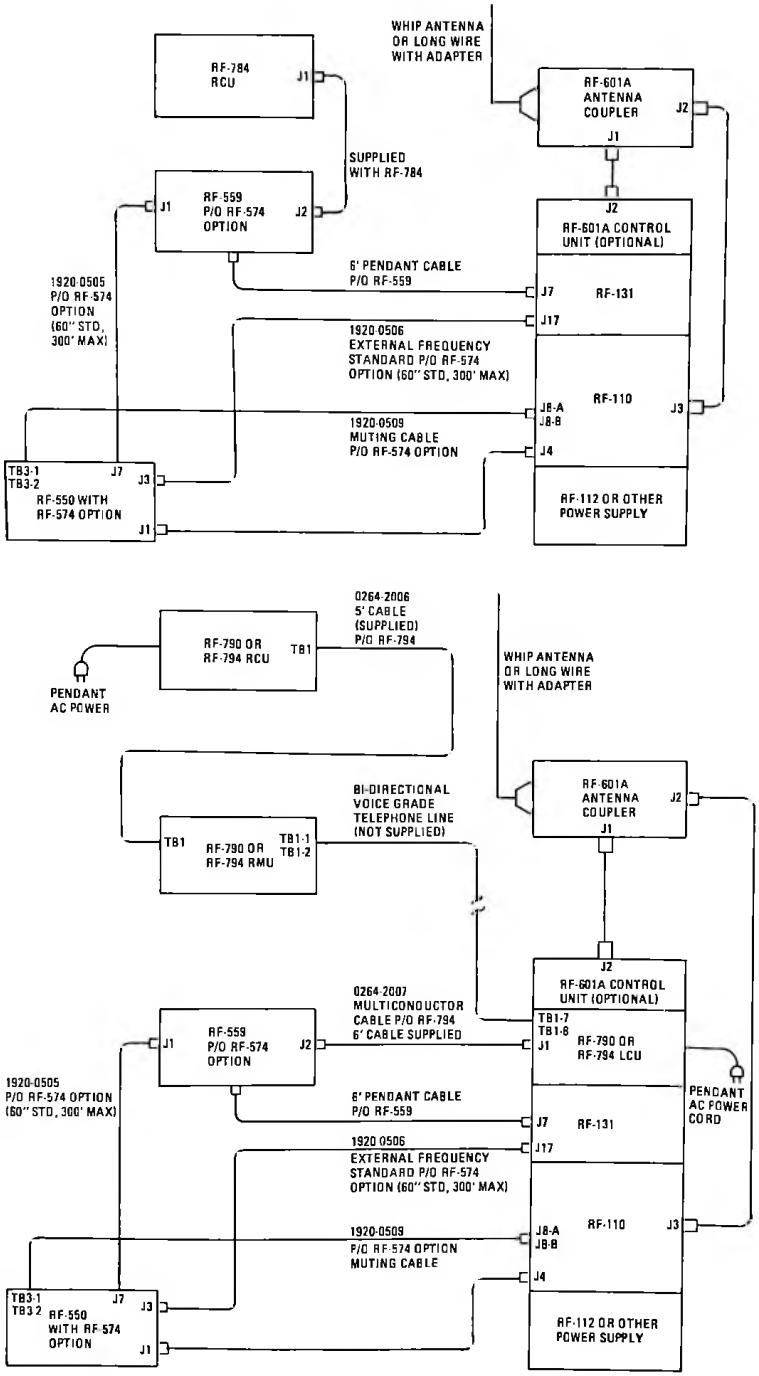

Figure 2-6. RF-574 Option, System Cabling

TABLE 2-4. RF-550 INTERNAL STRAPPING OPTIONS
(RF-550 Interfaced with RF-577, RF-784, RF-790, or RF-794)

CONTROL OPTION	CONTROL I JUMPERS 1920-2210	CONTROL II JUMPERS 1920-2220	LOCAL/ REMOTE SWITCH (S5)	DESCRIPTION
Remote, Frequency	E2 to E3	E1 to E2 E4 to E6 E7 to E8	Jumper 3 to 9	All Local Controls are active except the frequency select switch.
Remote, Frequency and Mode	E2 to E1	E1 to E3 E4 to E6 E7 to E8	Remove 3 to 9 jumper	1. IF BW is under local control. 2. BFO is on in CW, and Local Control is active. 3. AFC is disabled in CW and AM.
Remote, Frequency and Mode with preset IF BW in AM and CW	E2 to E1	E1 to E3 E4 to E5 E7 to E9 and feed-thru jumper in E6	Remove 3 to 9 jumper, and move wire 38 from S5-7 to S5-9	1. IF BW is 500 Hz in CW, and 6 kHz in AM. Local BW control is disabled. 2. BFO is on in CW, and Local Control is active. 3. AFC is disabled in CW and AM.
Remote, Full				Full remote should not be selected when RF-550 is used with above equipment. Used with RF-794RE only.

These options are available only in combination with one of the following remote control units: RF-577, RF-784, RF-790 or RF-794.

2.6 RF-550 WITH FSK CONVERTER

Figure 2-9 shows RF-550/FSK Converter system cabling.

2.7 MOUNTING

The RF-550 may be desk, stack, or rack mounted using one of the following kits:

- RF-569, desk top case.
- RF-570 stack mounting brackets, hardware, and slides.
- RF-571, rack mounting brackets, hardware, and slides.

Prior to mounting the unit, read this entire section of the manual. Figures 2-10 and 2-11 provide desk, stack, and rack mounting dimensions.

2.8 CABLES

Table 2-5 lists all RF-550 systems cables and connectors. This information covers cables supplied with the RF-550 as well as those supplied with related options. For further system cabling information, refer to the applicable instruction manuals.

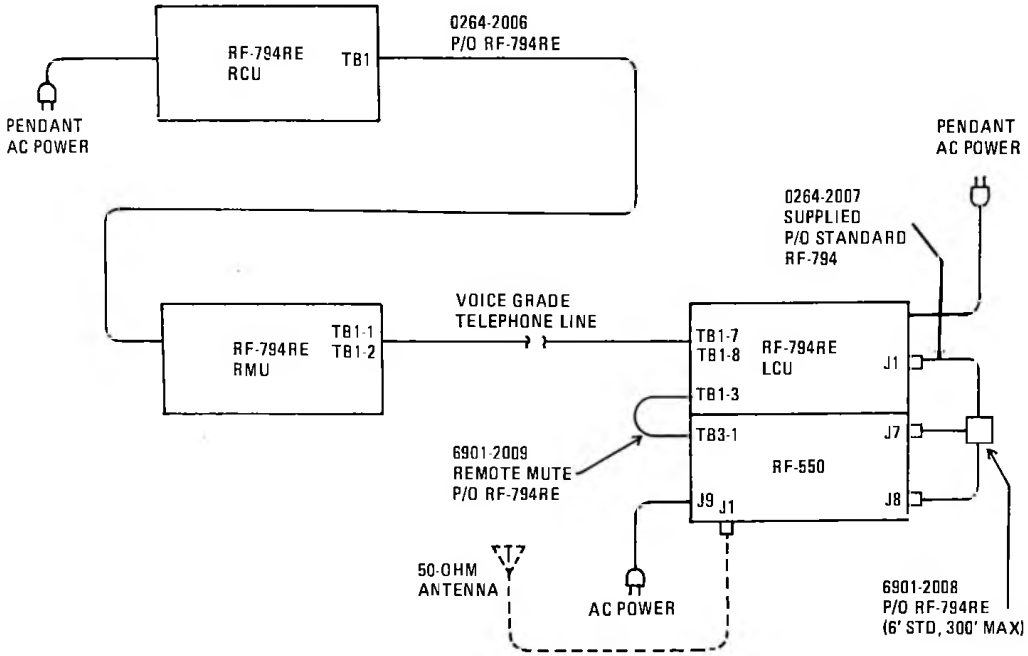

Figure 2-7. RF-550/RF-794RE System Cabling

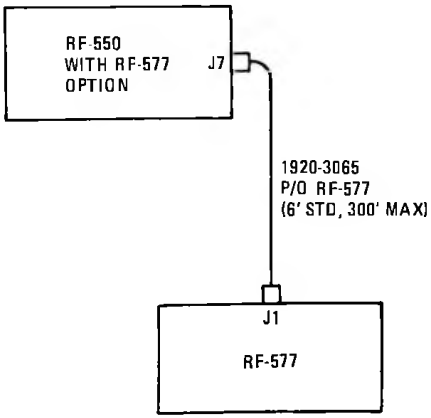

Figure 2-8. RF-550/RF-577 System Cabling

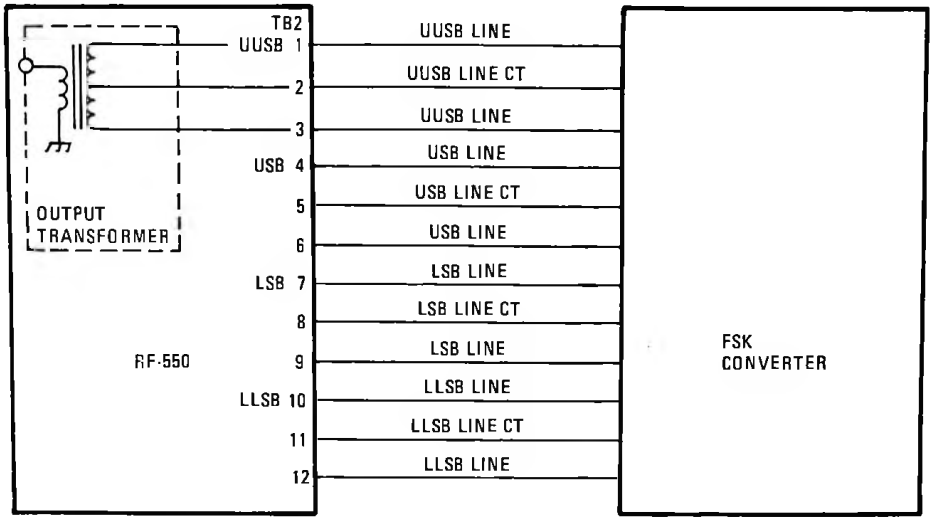

NOTES:

1. TERMINALS 2, 5, 8, AND 11 ARE COMMON AND SHOULD BE GROUNDED TO THE SYSTEM GROUND WHEN A BALANCED LINE OUTPUT IS REQUIRED. THESE TERMINALS ARE NOT USED WHEN A 600 OHM UNBALANCED LINE IS REQUIRED.
2. FOR 600 OHM UNBALANCED LINE OPERATION, EITHER SIDE OF THE LINE MAY BE GROUNDED IF THE CENTER TAP IS LEFT FLOATING.
3. FOR 250 OHM UNBALANCED LINE OUTPUT, THE SIGNAL MAY BE TAKEN FROM EITHER SIDE OF THE LINE AND THE CENTER TAP. THE UNUSED SIDE SHOULD BE LEFT FLOATING (I.E., NOT TERMINATED).
4. CONSULT THE APPROPRIATE INSTRUCTION MANUAL FOR THE FSK CONVERTER BEING USED.

Figure 2-9. RF-550/FSK Converter System Cabling

TABLE 2-5. RF-550 SYSTEMS CABLING

CABLE	CONNECTOR	
	FROM	TO
AC Power Cord (standard) P/N 724-0029	J9, RF-550	115/230 Vac Power Source
1920-0505* 30 Conductor Cable (60 in. standard, 300 ft. maximum)	J7, RF-550 (RF-574 option) J7, RF-550 (RF-572 option) Amphenol P/N 57-050360 (36 pin)	J1, RF-559 Junction Box (RF-574 option) J7, RF-131 (RF-572 option) Bendix P/N PT06W-22-55SW (55 pin)
1920-0506* 50 Ohm Coaxial (60 in. standard RG-223/U	J4, RF-550 (RF-572, RF-573, RF-574 options) BNC plug, Amp Inc. P/N 225395-3	J18, RF-131 (RF-572 and RF-574 options) J2, RF-551 Preselector (RF-573 option) BNC plug, Amp Inc, P/N 225395-3
1920-0507* 30 Conductor Cable (60 in. standard, 300 ft. maximum	J6, RF-550 (RF-573 option) Amphenol P/N 57-50360 (36 pin)	J1, RF-552 (RF-551 Preselector Remote Control Assembly – RF-573 option) MIL type MS3106A-24-28S (24 pin)

TABLE 2-5. RF-550 SYSTEMS CABLING (Cont)

CABLE	CONNECTOR FROM	CONNECTOR TO
1920-0509* Muting Cable (60 in. standard two conductor)	TB3-1 and TB3-2, RF-550 (RF-572 and RF-574 options)	J8-A and J8-B, RF-110 Connector (RF-572 and RF-574 options)
6901-2009** Cable and Junction Box (6 ft. standard, 300 ft. maximum)	TB3-1, RF-550	TB1-3, RF-794RE
	(Cable and hardware supplied with RF-794RE kit)	
6901-2008** Cable and Junction Box (6 ft. standard, 300 ft. maximum)	J7 and J8, RF-550 (Supplied with RF-794RE kit)	J1, RF-794RE LCU (Supplied with RF-794RE kit)
1920-3065* 30 Conductor Cable (6 ft. standard, 300 ft. maximum)	J7, RF-550 (RF-577 option) Amphenol P/N 57-50360 (36 pin)	J1, RF-577 (RF-577 option) Amphenol P/N 57-30360 (36 pin)
NOTE: To interface the RF-550 with an FSK converter, fabricate the cable per information given in the applicable instruction manual and in figure 2-9.		

* Option kits contain these cables with connectors installed. Standard 60-inch or 6-foot lengths are shipped with kits unless other lengths are specified.ed.

** These cable assemblies are part of the RF-794RE kit.

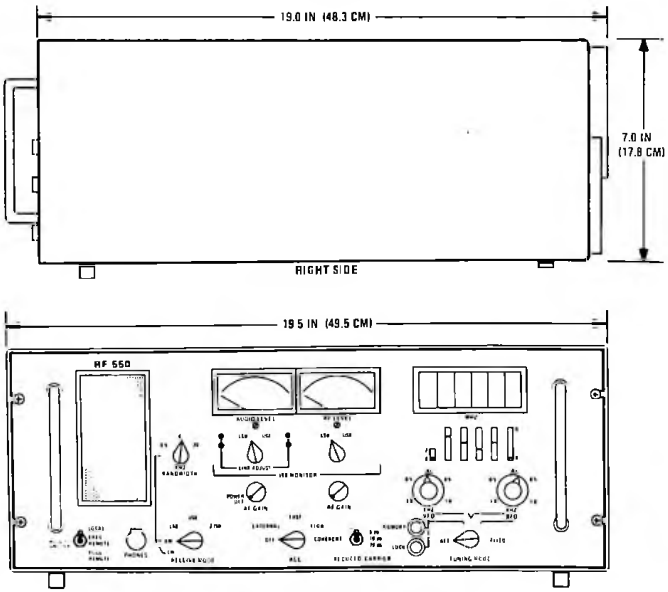

Figure 2-10. RF-550 Desk Mounting Dimensions

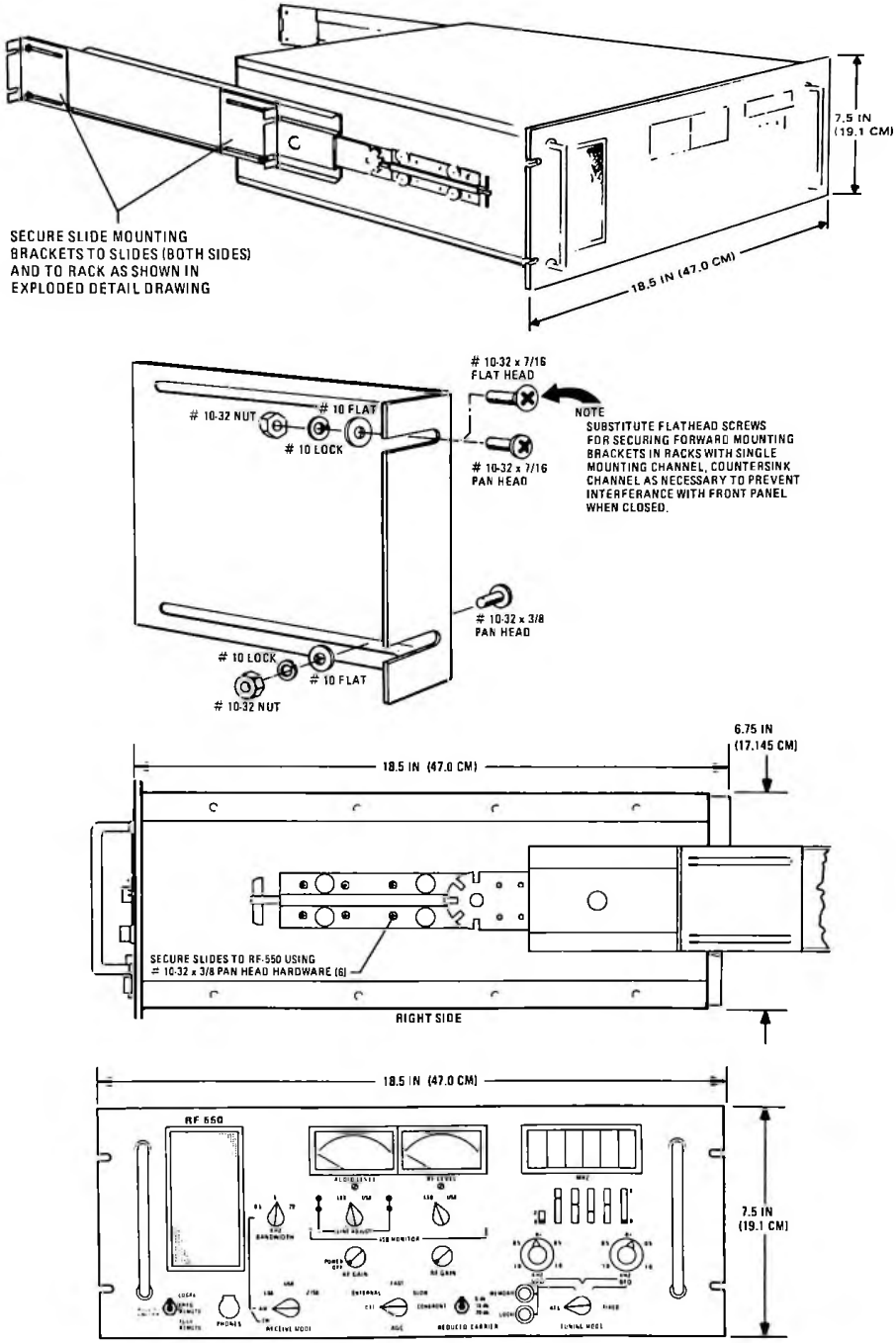

Figure 2-11. RF-550 Standard Rack/Stack Mounting

PART 3

OPERATION

3.1 GENERAL

All operating controls and indicators are located on the RF-550 front panel, as shown in figure 3-1. The front panel shown is the "standard" RF-550 configuration. Figure 3-2 shows five variations of the RECEIVE MODE, Audio Level, and RF Level switch configurations appearing on panels supplied with available RF-550 options.

Table 3-1 provides switch settings and operating instructions for all standard and optional RF-550 receive modes.

Because instructions for optional modes are included, the table may contain information about functions not available on a particular receiver. Table 3-2 describes the functions and uses of operating controls and indicators. The operator should read and understand all information in tables 3-1 and 3-2 prior to operating the RF-550. Refer to the maintenance instructions of the appropriate section for adjustments referred to in these tables.

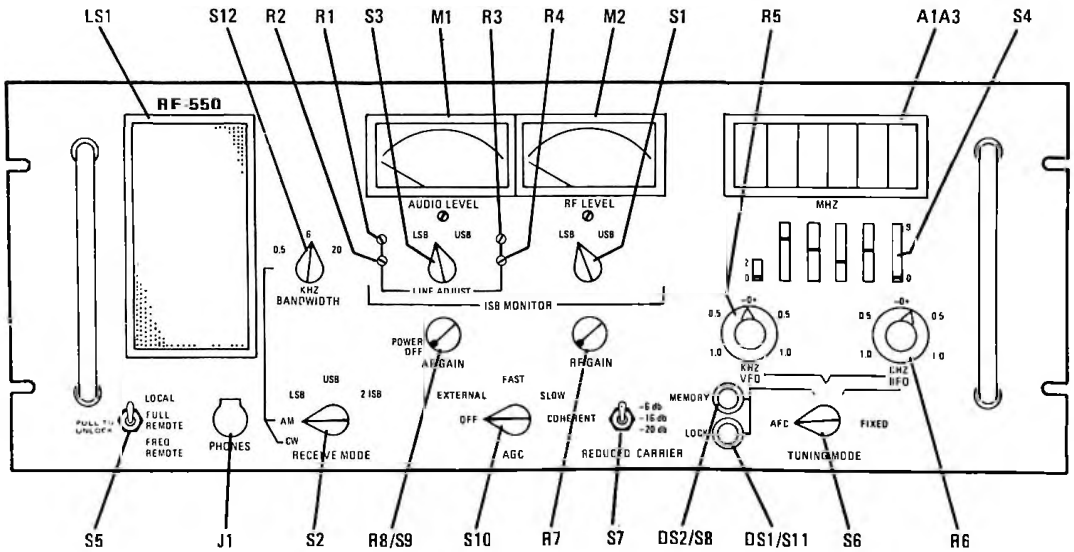

Figure 3-1. RF-550 Front Panel Controls and Indicators

CONFIGURATION	MODES AVAILABLE	RECEIVE MODE SELECTOR	ISB MONITOR SWITCH	
			AUDIO LEVEL	RF LEVEL
RF 550	STANDARD RECEIVE MODES	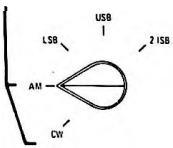	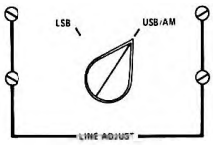	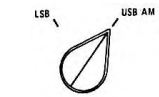
RF 550 WITH RF 562	4 ISB OPTION INCLUDES ALL STANDARD FEATURES BUT ADDS CAPABILITY FOR SIMULTANEOUS RECEPTION OF FOUR DISCRETE INTELLIGENCE CHANNELS IN 4 ISB MODE	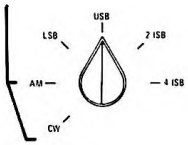	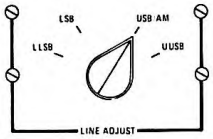	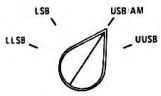
RF 550 WITH RF 562 AND RF 564 OR RF 550 WITH RF 562 AND RF 565	INCLUDES ALL STANDARD RECEIVE MODES BUT ADDS OPTIONAL WIDE (850 HZ) OR NARROW (170 HZ) RATT FILTERS IN USB RATT POSITION	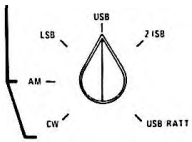	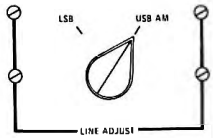	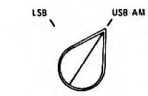
RF 550 WITH RF 564 OR RF 565 WITH RF 562	INCLUDES ALL STANDARD RECEIVE MODES BUT ADDS OPTIONAL WIDE (850 HZ) OR NARROW (170 HZ) RATT FILTERS IN COMBINATION WITH RF 562 4 ISB OPTION	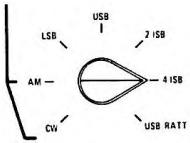	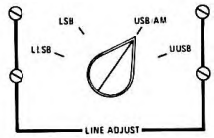	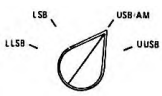
RF 550 WITH RF 565	INCLUDES ALL STANDARD RECEIVE MODES BUT ADDS BOTH WIDE (850 HZ) AND NARROW (170 HZ) RATT FILTERS NOT AVAILABLE IN COMBINATION WITH RF 562	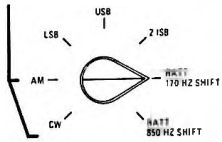	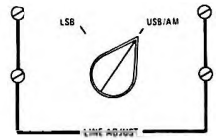	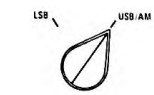

Figure 3-2. Standard and Optional Mode and Monitor Select Switch Configurations

TABLE 3-1. OPERATING INSTRUCTION FOR ALL RECEIVE MODES

RECEIVE MODE	LOCAL REMOTE	FREQUENCY SELECT	KHZ BANDWIDTH	ISB MONITOR AUDIO	ISB MONITOR RF	REDUCED CARRIER	AGC	AF GAIN	RF GAIN	TUNING MODE	LINE ADJUST
CW	Select LOCAL, FREQ. REMOTE or FULL REMOTE as desired.	Position switches to show exact frequency on display	Selectable 0.5* 6.0 20	Switch not functional. Correct channel monitor automatically selected.	Correct channel monitor automatically selected. Switch not functional.	Use only with pilot reception. Select position that corresponds to dB carrier suppression. Select COHERENT AGC and AFC TUNING MODE position. Adjust VFO for LOCK indication. With LOCK indicator illuminated, VFO is disabled and 0 Hz error is held by AFC. Loss of signal causes MEMORY indicator to illuminate, and receiver tuning frequency is maintained. Press to disable MEMORY and retune receiver (if desired).	Use FAST or SLOW as desired. Use coherent only as shown for reduced carrier operation. External 0 to +9 Vdc source can also be used to simultaneously control many receivers.	Adjust for desired level in headset or speaker	Leave at fully clockwise position unless manual control is desired as an aid in tuning.	Select VFO/BFO mode. Set VFO to ±0. Set BFO for +1 kHz or for desired tone. VFO may be adjusted to position signal in filter slot.	Adjust USB potentiometer if output is terminated in an audio line.
AM			Selectable 0.5 6.0* 20							Select FIXED or VFO. AFC and BFO are disabled.	Same as above.
LSB			Sideband filter A2A6A7FL1 automatically selected.							Select FIXED for normal operation, and combination VFO/BFO for manually optimizing reception. AFC may be used for Reduced Carrier operation.	Adjust LSB potentiometer for desired audio line level.
USB			Sideband filter A2A6A8FL1 automatically selected.								Adjust USB potentiometer for desired audio line level.
2 ISB			Appropriate filters automatically selected at both IF amplifiers	Select USB to adjust USB Level; LSB to adjust LSB Level.	Check both USB & LSB RF Levels.						Adjust both USB and LSB potentiometers for desired line levels.
4 ISB (RF-562 only)			Appropriate filters automatically selected at all four IF amplifiers	Switch through all four positions to check or adjust line levels.	Switch through all four positions to check rf levels.						Adjust all four potentiometers to control all four line levels.
USB/RATT (RF-564 or RF-565)			RATT filter automatically selected at A2A6A10	Switch not functional. Correct channel monitor automatically selected.	Switch not functional. Correct channel monitor automatically selected.					Tune 2 kHz low in FIXED, or VFO modes. Use BFO to select RATT tones for other than 2 kHz.	Adjust USB potentiometer for desired line level.
RATT 170 HZ SHIFT (RF-566 only)			Narrowband RATT filter automatically selected at A2A6-A10								Adjust USB potentiometer for desired line level.
RATT 850 HZ SHIFT (RF-566 only)			Wideband RATT filter automatically selected at A2A6-A10								Adjust USB potentiometer for desired line level.

*Normal optimum position

TABLE 3-2. RF-550 CONTROLS AND INDICATORS

CONTROLS/ INDICATORS	DESCRIPTION	
Local/Remote switch (S5)	Selects either local or remote control of the RF-550 as follows:	
	Switch Position	Response
	LOCAL	All control of RF-550 is from front panel. Remote control is locked out.
	FREQ REMOTE	Frequency is selected remotely. Local frequency selection is locked out. All other control is LOCAL.
	FULL REMOTE	All control of RF-550 is from remote control system. Local control is locked out.
Speaker (LS1)	Monitors intelligence channel selected by Audio Level or MODE switch.	
PHONES jack (J1)	Mutes speaker LS1 when headset is installed.	
KHZ BAND-WIDTH switch (S12)	Selects desired filter on IF Filter PWB when in AM or CW receive mode.	
	Switch Position	Response
	0.5	Provides optimum reception for CW signals and maximum discrimination against close-in interference.
	6	Standard AM filter
	20	Attenuates filtered RF/IF signal approximately 6 dB at IF Filter PWB for level compatability with 0.5 and 6 kHz filters.
RECEIVE MODE selector switch (S2)	Selects desired receiving mode. Note that "standard" RF-550 includes CW, AM, LSB, USB, and 2 ISB modes only. Additional modes are included with options indicated.	
	Switch Position	Response
	CW	The signal from the Input Filter and RF/IF Amplifier is filtered, amplified, gain controlled product detected, and made available at any of the Monitor Amplifier outputs or at TB2-4, 5 & 6.
	AM	The signal from the Input Filter and RF/IF Amplifier is filtered, amplified, gain controlled, envelope detected, and made available at any of the Monitor Amplifier outputs or at TB2-4, 5 & 6.
	LSB	The signal from the Input Filter and RF/IF Amplifier is amplified, gain controlled, product detected, and made available at any of the Monitor Amplifier outputs or at TB2-7, 8 & 9.
	USB	The signal from the Input Filter and RF/IF Amplifier is attenuated 6 dB, amplified, gain controlled, product detected, and made available at any of the Monitor Amplifier outputs or at TB2-4, 5 & 6.
	2 ISB	The USB and LSB outputs are simultaneously available as previously described.

TABLE 3-2. RF-550 CONTROLS AND INDICATORS (Cont)

CONTROLS/ INDICATORS	DESCRIPTION	
RECEIVE MODE selector switch (S2) (Cont)	Switch Position	Response
	4 ISB (RF-562 only)	Four discrete line outputs are simultaneously available at the corresponding outputs on TB2 at the rear of the RF-550, or at the Monitor Amplifier outputs. Four additional modules are required for this mode.
	USB/RATT (RF-564 or RF-565)	Functions similar to USB operation except for special RATT filter (850 Hz for RF-564 option or 170 Hz for RF-565 option) selected at IF Filter PWB A2A6A10.
	RATT 170 Hz Shift (RF-566 only)	The signal from the Input Filter and RF/IF Amplifier is filtered by A2A6A10-FL3 to provide for FSK narrowband operation. The filter output is amplified, gain controlled, product detected, and made available at any of the Monitor Amplifier outputs or at TB2-4, 5 & 6.
	RATT 850 Hz Shift (RF-566 only)	The signal from the Input Filter and RF/IF Amplifier is filtered by A2A6A10-FL2 to provide for FSK wideband operation. The filter output is amplified,gain controlled, product detected, and made available at any of the Monitor Amplifier outputs or at TB2-4, 5 & 6.
AUDIO LEVEL meter (M1)	Indicates signal level of USB (AM/CW), LSB, UUSB, or LLSB Line Amplifier output as selected by Audio Level switch S3. Indicating range is –6 to +14 dBm. 0 dBm = 1 mW into 600-ohm line.	
Audio Level switch (S3)	Selects audio power level into associated 600-ohm line in the –6 to +14 dBm range for display on meter M1.	
	Switch Position	Response
	LSB	Selects LSB line output from A2A6A2. For line output adjustment see LSB LINE ADJUST potentiometer.
	USB	Selects USB (AM/CW) line output from A2A6A2. For line output adjustment see USB LINE ADJUST potentiometer.
	LLSB (RF-562 only)	Selects LLSB line output from A2A6A3. For line output adjustment see LLSB LINE ADJUST potentiometer.
	UUSB (RF-562 only)	Selects UUSB line output from A2A6A3. For line output adjustment see UUSB LINE ADJUST potentiometer.
LSB LINE ADJUST potentiometer (R1)	Adjusts LSB line output to TB2-7, 8 & 9. Screwdriver adjustment.	
LLSB LINE ADJUST potentiometer (R2)	Adjusts LLSB line output to TB2-10, 11 & 12. Screwdriver adjustment.	
USB LINE ADJUST potentiometer (R3)	Adjusts USB line output to TB2-4, 5 & 6. Screwdriver adjustment.	

TABLE 3-2. RF-550 CONTROLS AND INDICATORS (Cont)

CONTROLS/ INDICATORS	DESCRIPTION
UUSB LINE ADJUST potentiometer (R4)	Adjusts UUSB line output to TB2-1, 2 & 3. Screwdriver adjustment.
RF LEVEL meter (M2)	Indicates antenna signal strength by monitoring AGC voltage from USB, LSB, UUSB, or LLSB IF amplifiers as selected by RF Level switch S1. Linear scale calibrated in uV, and dB referenced to 1 uV in 50 ohms so that a 1 uV input is equivalent to −107 dBm.
RF Level switch (S1)	Selects RF LEVEL meter (M2) input as described below. Switch Position — Response USB/AM — Selects USB AGC voltage for relative signal strength display on meter M2. LSB — Selects LSB AGC voltage for relative signal strength display on meter M2. UUSB (RF-562 only) — Selects UUSB AGC voltage for relative signal strength display on meter M2. LLSB (RF-562 only) — Selects LLSB AGC voltage for relative signal strength display on meter M2.
AF GAIN potentiometer (R8)	Controls audio signal level to phone jack, local speaker, or external speaker. Does not affect line outputs.
POWER OFF switch (S9)	Controls primary power to RF-550.
RF GAIN potentiometer (R7)	Controls AGC to IF amplifiers through Control I PWB. Active in all AGC modes.
AGC selector switch (S10)	Controls presence and type of Automatic Gain Control (AGC) to the RF-550. Switch Position — Response OFF — No AGC. Manual RF and AF gain potentiometers exercise exclusive control. EXTERNAL — Selects external AGC input. FAST — Selects AGC speed having a 10 ms attack and 0.1 second decay time. SLOW — Selects AGC speed having a 10 ms attack and 1 second decay time. COHERENT — Selects coherently derived AGC. Should be selected only when the RF-550 is in AFC tuning mode.
REDUCED CARRIER switch (S7)	Adjusts receiver gain to maintain correct information channel signal level to carrier level ratio with respect to PEP.

TABLE 3-2. RF-550 CONTROLS AND INDICATORS (Cont)

CONTROLS/ INDICATORS	DESCRIPTION
REDUCED CARRIER switch (S7) (Cont)	**Switch Position** / **Response** –6 dB: Applies 14 dB of attenuation to AFC IF signal to maintain correct signal power to carrier power ratio for 6 dB suppressed carrier. –16 dB: Applies 4 dB of attenuation to AFC IF signal to maintain correct signal power to carrier power ratio for 16 dB suppressed carrier. –20 dB: No attenuation. Maintains correct signal power to carrier power ratio for 20 dB suppressed carrier.
Frequency display (A1A3)	Six digit display indicates frequency to which RF-550 is tuned.
Frequency switch (S4)	Six decade sections which provide local tuning as described below. Switch outputs are integrated with remote control information in RF-550 Control Group PW Boards A2A10, A2A11, and A2A12. **Switch Section** / **Response** 10 MHz: Drives High Band PLL A2A8 to select 10 MHz digit. 1 MHz: Drives High Band PLL A2A8 to select 1 MHz digit. 100 kHz: Drives High Band PLL A2A8 to select 100 kHz digit. 10 kHz: Drives Low Band PLL A2A14 to select 10 kHz digit. 1 kHz: Drives Low Band PLL A2A14 to select 1 kHz digit. 100 Hz: Drives Low Band PLL A2A14 to select 100 Hz digit.
VFO potentiometer (R5)	Provides ± 1 kHz continuous tuning capability to complete the tuning range of the RF-550.
BFO potentimeter (R6)	Adjusts BFO frequency to Audio Output product detectors through a range of ± 1 kHz for general purpose CW, SSB, and RATT operation.
TUNING MODE selector switch (S6)	Selects RF-550 tuning mode as described below. **Switch Position** / **Response** FIXED: AFC, VFO, and BFO are negated. The RF-550 will operate on the exact frequency displayed. BFO: BFO enabled, VFO disabled. Used to select desired tone in CW operation, to "clarify" SSB signals without disturbing front end tuning, and to produce precise RATT mark-space frequencies. VFO/BFO: VFO and BFO simultaneously active. First local oscillator frequency can be shifted ± 1 kHz with VFO for precise front end tuning or for optimum relationship between desired signal, interference signals, and filter characteristic curves. BFO can be adjusted simultaneously for desired output tone.

TABLE 3-2. RF-550 CONTROLS AND INDICATORS (Cont)

CONTROLS/ INDICATORS	DESCRIPTION	
TUNING MODE selector switch (S6) (Cont)	Switch Position	Response
	VFO	VFO enabled, BFO disabled. First local oscillator frequency can be varied ± 1 kHz to provide continuous tuning capabilities. VFO can be used to obtain "zero beat" for AFC operation while MEMORY and LOCK indicators are not lit.
	AFC	Used for receiving pilot carrier signals only. Reduced carrier levels of −6, −16, and −20 dB can be accommodated using REDUCED CARRIER switch S7. BFO is disabled. VFO is enabled while MEMORY and LOCK indicators are not lit. MEMORY and LOCK pushbuttons may be depressed to enable VFO.
MEMORY indicator/push-button (DS2/S8)	Lights to indicate AFC lock has been interrupted and control is being maintained by the AFC memory circuit. Typical hold time is 15 seconds. Pushbutton may be depressed to disable memory.	
LOCK indicator/push-button (DS1/S11)	Lights to indicate AFC circuit has acquired and locked to suppressed carrier on the received signal. Lock condition will hold receiver tune to ± 0 Hz. Pushbutton may be depressed to break lock. AFC MEMORY indicator should light immediately.	

PART 4

FUNCTIONAL DESCRIPTION

4.1 GENERAL

The RF-550 is a modularized state-of-the-art ISB Receiver. The information presented in this section describes the major functions of the Receiver Assemblies, presented in sequence to follow the normal receiver signal path. The functional block diagram on the cover sheet of this section shows assembly level relationships and signal paths between assemblies.

NOTE

All levels given correspond to a 10 dB signal-to-noise ratio.

4.2 INPUT FILTER ASSEMBLY

The antenna input to the receiver is applied to Input Filter Assembly A2A4, either directly or, optionally, through High Z Input Transformer Assembly RF-567. The input may also be routed through the RF-551 Preselector in systems using that option. The input filter includes receiver protection circuitry that accommodates up to 10 Vrms at the input, receiver muting circuitry, a low pass filter, and ten 1/2-octave filters covering the frequency range of the receiver. The filters provide approximately 67 dB of rejection to unwanted signals, a VSWR of approximately 2:1, and a nominal insertion loss of -4 dB.

4.3 RF/IF ASSEMBLY

The RF/IF Assembly accepts the 0.1 to 30 MHz output from the Input Filter Assembly in the range of -120 to +5 dBm and uses two stages of mixing to deliver a 1.75 MHz output frequency to the appropriate IF amplifier. The RF/IF Assembly is gain controlled by shaped AGC voltage to maintain an output level in the range of -89 to -14 dBm for the USB channel output. The RF input is subtractively mixed with the 158.35 to 188.25 MHz synthesizer output to produce a 158.25 MHz IF signal. After filtering in a helical resonator, the 158.25 MHz IF signal is subtractively mixed with the 160 MHz synthesizer output to produce a constant 1.75 MHz IF at the output. The output is power divided by four and routed to the appropriate IF amplifier. Note that USB, AM, CW, and FSK signals are routed through the A2A6A10 IF Filter. LSB, LLSB, UUSB IF outputs are routed directly to the appropriate IF amplifier assembly.

4.4 IF FILTER ASSEMBLY

The IF Filter Assembly incorporates up to four separate filters and a 6 dB pad. The filters are automatically selected in response to mode selection logic. USB signals are passed through a 6 dB pad, CW and AM modes permit selection of either .5, 6 or 20 kHz IF bandwidths. FSK signals are routed through the FSK filter when USB/RATT mode is selected. The 1.75 MHz AFC signal is derived in this assembly and supplied to the AFC IF Amplifier Assembly. LSB, LLSB, and UUSB signals (optionally available) are not routed through this assembly.

4.5 IF AMPLIFIER ASSEMBLY

The IF Amplifier Assembly provides most of the receiver gain and AGC range. The -95 to -20 dBm 1.75 MHz IF input is amplified and gain-controlled to provide a constant -13 dBm, 1.75 MHz IF output. The four IF amplifiers in this assembly are identical except for the filter provided, which depends upon the functional placement of the IF amplifier and on the bandwidth specified. AM and CW signals bypass this filter in the USB IF amplifier. AGC detectors and amplifiers are also incorporated in each IF amplifier to provide 85 dB of gain control in the related cascade IF amplifier chain. AM signals are detected at the output of the USB IF Amplifier. Sideband signals are routed to the appropriate audio amplifier at the IF frequency.

4.6 AUDIO OUTPUT ASSEMBLY

AM signals bypass the product detector in the USB amplifier and are routed through the low pass filter and line amplifiers to the output. AM signals are thus available at the USB output terminals on the output terminal board at the rear of the receiver. With the receiver operating in the CW or SSB sideband mode, the signal from the IF amplifier is switched to the product detector at the input to the amplifier. Note that Audio Output Assembly A2A6A2 comprises two separate audio amplifiers, each with its own product detector at the input. A2A6A2 accommodates the outputs from the separate USB and LSB amplifiers. If the receiver incorporates the 4 ISB option, Audio Output Assembly A2A6A3 serves a similar function for both the UUSB and LLSB IF amplifiers. Four discrete outputs (USB, UUSB, LSB, and LLSB) are provided at the corresponding output terminals at TB2 on the RF-550 rear panel.

Separate monitor outputs are also provided from each amplifier. Control circuits select the audio signal to be monitored through the separate monitor amplifier and at the front panel meter. Front panel line level control is also provided by the output audio boards.

4.7 AUDIO AMPLIFIER MONITOR ASSEMBLY

Any audio output available within the receiver can be monitored on meter M1 by front panel switch selection. The selected output is amplified by the Audio Amplifier Monitor Assembly and is present at the front panel speaker, phone jack, and external speaker output. Speaker volume control provided for the channel being monitored has no effect on the output level. The level indicated on M1 is the level delivered to the line output, not to the speaker.

4.8 SYNTHESIZER

Refer to figure 4-1 for the following discussion. The function of the frequency synthesizer is to generate the local oscillator signals. The synthesizer is housed in four assemblies: the Low Band PLL, the High Band PLL, the Frequency Standard, and the Frequency Translator. A subcarrier Generator is also used with the 4 ISB version. Frequency increments are selectable that tune the entire range of 0.1 MHz to 30 MHz in 100 Hz steps. A VFO provides for tuning ± 1000 Hz about the selected frequency. The first local oscillator tunes 158.350 to 188.250 MHz. The frequency switches on the front panel are

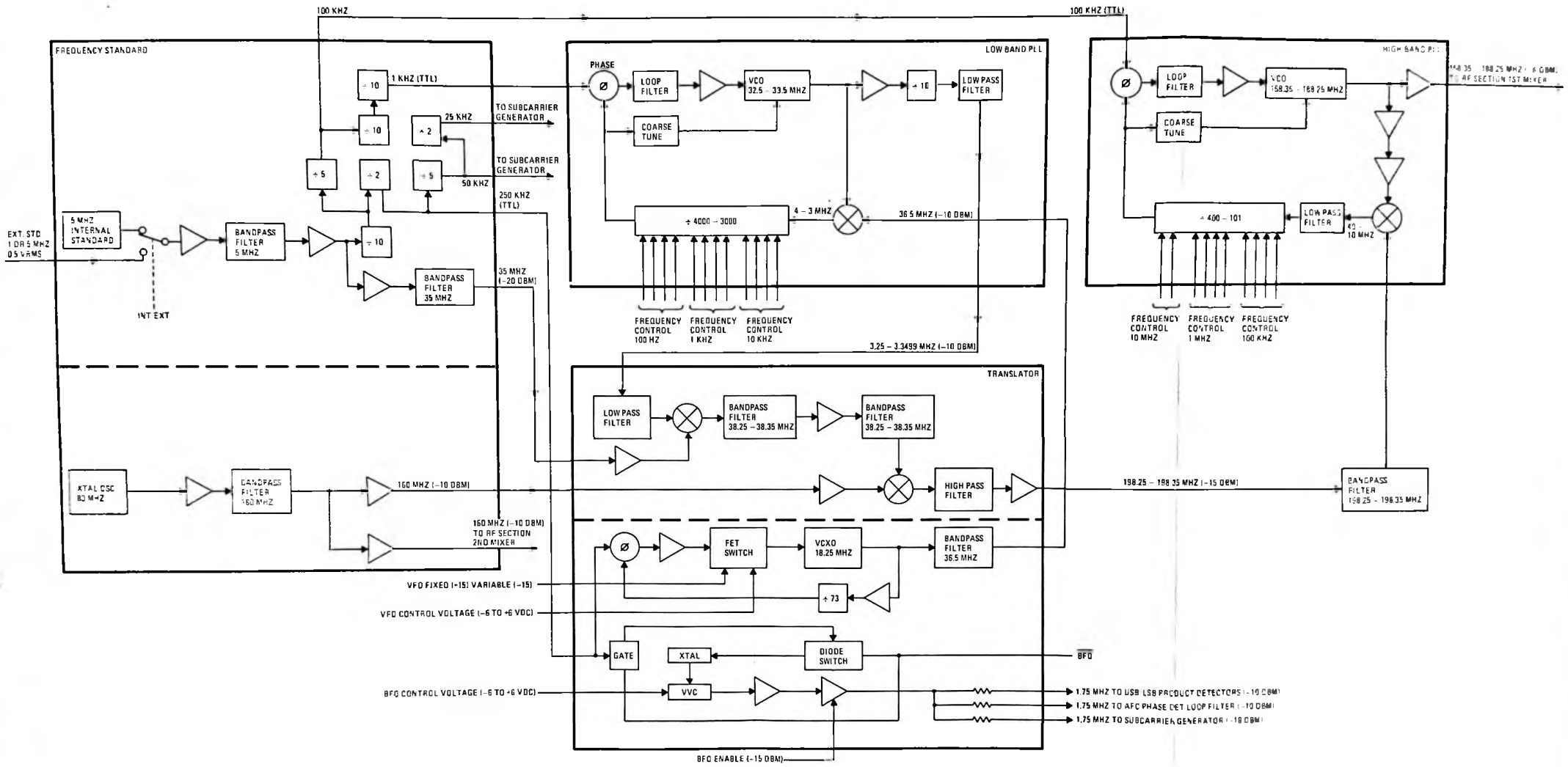

Figure 4-1. Frequency Synthesizer Block Diagram

used to preset dividers in both the Low Band PLL and the High Band PLL. The Low Band PLL, which generates the 100 Hz, 1 kHz and 10 kHz increments, contains a VCO that tunes from 32.5 to 33.5 MHz. The VCO output is mixed with 36.5 MHz from the Frequency Translator in a subtractive mixer that produces a difference frequency of 3 to 4 MHz. This frequency is divided by a ratio of between 4000 and 3000 to obtain 1 kHz, depending on front panel frequency switch positions (or remote tuning logic states). The 1 kHz output is compared in a phase detector with 1 kHz from the frequency standard, and the error signal is used to phase lock the VCO. The VCO is thus accurately referenced to the frequency standard but is at a frequency between 32.5 and 33.5 MHz. This signal is divided by 10 and routed to the translator where it is mixed with 35 MHz derived from the standard to obtain a frequency of 38.25 to 38.35 MHz. This output is added to 160 MHz to obtain the 198.25 to 198.35 MHz injection into the high band mixer. The high band mixer subtracts the output of the high band VCO (158.35 to 188.25 MHz) from the 198.35 to 198.25 MHz to obtain a frequency between 40 and 10 MHz. This is divided in a preset divider whose division ratio is set by the 100 kHz, 1 MHz, and 10 MHz switches. The output of the divider is compared with 100 kHz derived from the Frequency Standard in a phase detector. The phase detector output, which is modified by the loop filter, is used to lock the VCO. After being buffered, the VCO output becomes the local oscillator injection signal. The first local oscillator injection frequency in the range of 158.35 to 188.25 MHz is subtractively mixed with the incoming signal from the RF Amplifier to produce the 1st IF frequency of 158.25 MHz.

The 2nd mixer local oscillator injection signal is the same 160 MHz used in the additive mixing to obtain the 198.25 to 198.35 MHz signal for the High Band PLL translation. In the receiver 2nd IF mixer, however, subtractive mixing is used to derive the 1.75 MHz final IF. This scheme results in error cancellation, since any error added by the first mixing is canceled by the subtractive second mixing. A high stability 160 MHz source is, therefore, not required.

4.9 AUTOMATIC FREQUENCY CONTROL (AFC)

AFC circuitry is contained on the AFC IF Amplifier and the Phase Detector/ Loop Filter plug-in cards located in the card cage area of the receiver. When the receiver is in the AFC mode, the suppressed carrier is selected by the 500 Hz CW filter, and presented to the AFC IF Amplifier PWB. Here the signal is amplified, and attenuated by 0, 4, or 14 dB corresponding to -20, -16, or -6 dB suppressed carrier, respectively. The signal is then applied to the AFC Phase Detector PWB. Here buffer amplifiers provide additional gain and isolation, and the signal is fed to two phase detectors, where it is compared with a 1.75 MHz reference frequency. The 1.75 MHz is provided by a 90° hybrid circuit which shifts the phase of the P Reference 90° with respect to the Q Reference. The P detector output is used to tune the VCO. The Q detector output is used to detect frequency lock. Prior to lock, the receiver gain is controlled by a prelock AGC circuit. Prelock gain is higher than after-lock gain, in order to enhance lock threshold.

The locking sequence is as follows. As the input IF frequency approaches the

1.75 MHz reference, a difference frequency beat note appears at the output of the P and Q detectors. As the beat note gets lower in frequency, the dc level associated with phase detector operation becomes larger. The correlation filter amplifies and integrates this level until it becomes large enough to cause the lock comparator to switch. The comparator output switches the AGC from pre-lock to post-lock and turns the lock light on. It also switches the characteristic of the loop filter amplifier.

Prior to lock, the loop filter is ac coupled to the P detector but dc coupled through a feedback resistor which both limits the gain and reduces the effect of dc offsets in the operational amplifier.

As the beat note frequency gets lower, the dc component of the ac waveform from the P detector is integrated by the loop filter. This dc level causes the VCO in the VFO circuit to move closer to zero beat. This action is regenerative and the loop snaps into lock when the beat note gets sufficiently low. Simultaneously, the Q detector output increases until the lock comparator changes state. When this happens, two FET switches are controlled. The first switch shorts the ac coupling capacitor on the loop filter input. The second switch opens the dc circuit in the feedback path. Consequently the operational amplifier gain increases to its full open loop gain, resulting in low static phase error. DC offset is of no consequence, since the error is corrected by the feedback action of the overall AFC loop.

4.10 CONTROL INTERFACE

Control of the RF-550 is performed by digital circuits on four control cards located in the rear center of the receiver. The digital circuitry accepts inputs from all front panel controls except the power ON/OFF, audio gain and ISB monitor switches. The control cards also have inputs that enable remote control of the receiver. Analog signals for RF gain, VFO tuning and BFO tuning are routed through control cards I and II via FET switches that are controlled by TTL gates. Remote analog inputs for RF gain, VFO tuning, and BFO tuning are provided at J8.

4.11 DISPLAY

The RF-550 uses a Beckman SP-752 gas discharge display to indicate the frequency to which the receiver is tuned. The display is controlled by a DD-700 BCD-to-7-segment decoder/driver.

The receiver is tuned by means of front panel digit switches, which select the appropriate gate inputs on the frequency control cards. The frequency information is then converted to positive true logic levels and used to program the frequency synthesizer, 1/2-octave filter switching, and the display decoder/drivers.

PART 5

MAINTENANCE

5.1 FAULT ISOLATION

Table 5-1 is a list of possible fault conditions and probable causes. This table is not presented as a comprehensive list of receiver troubles, but only as a guide to trouble analysis. The first step in troubleshooting is symptom recognition based on knowledge of equipment characteristics. Not all equipment troubles are the direct result of component failure. For example, a condition of less than peak performance can result from component degradation. It is important that degradations be recognized as well as troubles resulting from component failures.

The next step is to determine logical causes of the trouble. A check of operation in different modes and at different frequencies will help to eliminate some causes and will sometimes pinpoint the problem.

The modular construction of the RF-550 lends itself to a logical and straight forward troubleshooting procedure. By referring to the overall and individual block diagrams, and using related level and frequency information, a trouble can be localized to a particular assembly.

The quickest and most convenient method of confirming the correct RF input levels to a suspected assembly is to temporarily remove it from the chassis and connect a Boonton type 91H (or equivalent) RF voltmeter with a 50-ohm probe adaptor to the indicated chassis connector pin(s) with a short BNC-to-Winchester adapter cable (paragraph 5.5). The 50-ohm probe adapter simulates correct loading on the signal source.

NOTE

> Do not connect the 50-ohm load to digital input, since this is too heavy a load for digital integrated circuits. For these circuits, use an oscilloscope with a high impedance probe.

Similarly, output signal levels can be measured conveniently by temporarily substituting the meter for the following assembly in the signal path.

After establishing the existence of a trouble in a particular assembly, refer to the servicing information for the assembly given in the unit instruction sections of this manual.

5.2 PW BOARD REPAIRS

The following general rules and techniques are useful in servicing the pw boards of the RF-550.

- When replacing components on printed wiring boards, clip the mounting leads first with a suitable pair of diagonal cutters and remove the component. This is especially helpful on multilead components such as the dual in-line and circular type integrated

circuits. The individual leads are then removed from the pw board with a low wattage iron.

- Before removing an integrated circuit from a pw board, note orientation of the pin locating tab and insure the replacement component is reinstalled in exactly the same way.

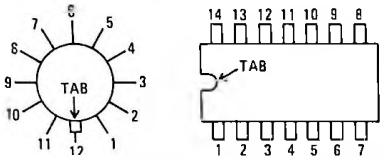

Integrated Circuit Orientation, (Top View)

- Because of the double sided construction used on many of the pw boards in the RF-550, a component lead may be soldered to printed circuit areas on the top and bottom of the pw board. Consequently, when a component lead is removed, the replacement component should be resoldered top and bottom as applicable.

- Overheating a printed circuit conductor may cause it to pull loose from the board material. Apply only the minimum amount of heat necessary for component removal or replacement. The use of a soldering iron in the 25 to 35W range is recommended.

- A desoldering tool (solder-sucker) is very convenient (and minimizes board damage) when removing multilead components which cannot be cut loose with diagonal cutters. Components of this type include special RF Communications minimodules and double balanced mixers, both used extensively in the various assemblies. The UNI-

- A convenient device to use in place of a solder-sucker is a roll of Solder-Wick, manufactured by Solder Removal Co., Covina, California. This flux-saturated copper braid is often more effective than a solder-sucker for removing solder from pw boards.

- The RF-550 uses Metal Oxide Field Effect Transistors (MOS-FET) in some circuit applications (for example, in the sample-and-hold phase detectors of the Low Band PLL assembly). Type 3N171 MOS-FETs require special care during handling to prevent burn-out of their insulated gates from static charges. Use the following procedure when replacing a MOS-FET transistor. (Common junction FETs do not require this procedure.)

5.2.1 MOS-FET REPLACEMENT

a. Remove new MOS-FET from package. The four leads may be connected together with a small ferrule or wire to prevent static charge differences between the gate and substrate terminals. If the ferrule is present, wrap several turns of solder or small gauge wire around the leads and then remove the ferrule.

b. Position the four leads and install the MOS-FET on the pw board.

c. Remove the jumper only after the leads are soldered.

TABLE 5-1. TROUBLESHOOTING

SYMPTOMS	POSSIBLE CAUSES	CHECK
Display dark; otherwise Receiver functioning correctly	No +200V	200V section of A2A3 Power Supply Assembly
Receiver not functional in any way	One or more dc voltages not present	Check for correct power supply voltages in Assembly A2A3
Poor receiver sensitivity or unable to receive certain frequencies	Input filter	Input filter switching on A2A11 TP1 to TP10, and A2A4A2 filter control
Cannot receive any frequencies and synthesizer is known to be functioning	RF/IF assembly	RF/IF Assembly A2A5 at IF test output
Reduced dynamic range of receiver	RF/IF assembly	RF/IF AGC Shaper A2A5A4
No monitor output. Line outputs OK.	Monitor amplifier	Monitor amplifier A2A6A1. Meter calibrate A1A2 for correct switching signals
No line output. Monitor output and BFO are OK.	Line output amplifier	Line Output Amplifier A2A6A2
No line level meter indication	1. Audio output level detector	1. A2A6A2 TP1, TP2 for detector output.
	2. Meter switching	2. Meter Calibrate PWB A1A2 and front panel switching.
Unable to lock to a pilot carrier and cannot vary the beat note with the VFO control.	Failure of manual tuning in AFC	AFC Phase Detector A2A6A4 loop filter
MEMORY or LOCK lights never light but lock is achieved	MEMORY and LOCK light switching failure	AFC Phase Detector A2A6A4 loop filter
Coherent AGC not functional	Coherent AGC detector	AFC Phase Detector A2A6A4 loop filter AGC output
AFC threshold is greatly increased	1. Reduced AFC IF amplifier gain	1. RF gain control should be fully cw. Check A2A6A5 gain.
	2. Switching failure	2. A2A6A10 for correct control signals
No RF gain control in coherent AGC	AFC IF Amplifier PWB	AGC shaper circuit on A2A6A5
Changing carrier suppression switch position does not cause the signal strength meter to change	AFC carrier suppression attenuator	Attenuator on A2A6A5
No RF gain control with AGC OFF, FAST or SLOW	IF amplifiers	A2A6A7/A8 AGC shaper circuit

TABLE 5-1. TROUBLESHOOTING (Cont)

SYMPTOMS	POSSIBLE CAUSES	CHECK
No AGC control with AGC in FAST or SLOW	IF amplifier	1. A2A6A7/A8 AGC shaper circuit 2. A2A6A7/A8 AGC detector circuit
No reception in CW, AM, or USB	IF amplifier	USB IF Amplifier A2A6A8
No reception in LSB	IF amplifier	LSB IF Amplifier A2A6A7
No reception in CW or AM. USB is functional	IF filter	A2A6A10 IF filter control inputs
No audio level or signal strength meter indications	Frequency standard	1. Int/Ext. switch 2. Frequency standard oscillator
Receiver cannot be tuned	Synthesizer	High and Low Band PLL Assemblies A2A8 & A2A14
Frequency display incorrect or letters are displayed	Control cards	10/1 MHz Control PWB A2A11. 100/10/1 kHz Control PWB A2A12. 100 Hz logic on Control II PWB A2A10
No audio monitor or line output for UUSB or LLSB modes	No subcarriers	Subcarrier Generator A2A13
No BFO or VFO control. Reception is possible	Lack of analog control voltage for oscillators	Control II PWB A2A10
With tuning mode in fixed, receiver appears to be off frequency.	1. Oven controlled frequency standard not warm 2. VFO is not phase locked to the frequency standard	1. Allow 1 hour warm-up time 2. 36.5 MHz PLL in Translator Assembly A2A15
USB and LSB channels are heard simultaneously in 2 ISB mode	Faulty audio switching	Meter Calibrate PWB A1A2 or Monitor Amplifier PWB A2A6A1

5.3 CONVERSION BETWEEN DBM AND VOLTS RMS

Power levels in this manual are stated in dBm, or decibels with respect to 1 milliwatt. Thus, for example, +6 dBm means 6 dB more than ("above") 1 mW, or 4 mW. Similary, -6 dBm is 6 dB less than ("below") 1 mW, or 0.25 mW (250 uW).

Notice that every value of dBm corresponds to a particular amount of power. If the impedance in which this power is dissipated is known, the corresponding voltage and current can be determined. Table 5-2 lists 50-ohm voltage equivalents for many dBm power levels. Note that for negative values of dBm, voltages are read in either of the two left-hand columns. For positive values of dBm, voltages are read in the right-hand column. For instance, -6 dBm is 0.112V (112 mV), across 50 ohms, while +6 dBm is 0.446V. Similarly, -20 dBm equals 22.4 mV, while +20 dBm equals 2.24 volts (across 50 ohms).

5.4 MIXERS/INJECTION LEVEL

Balanced diode mixers are used extensively for frequency conversion in the RF-550. The signal path conversion loss for the type mixers used is typically 6 dB, provided the local oscillator injection level is sufficiently high. For proper operation, the local oscillator injection source must be capable of developing at least +4 dBm (350 mVrms) into 50 ohms. The design level is +7 dBm (500 mVrms). Below +4 dBm the conversion loss of the mixer increases rapidly (point A in figure 5-1).

Because of the varying load which a mixer presents to the local oscillator source during a single RF cycle, a

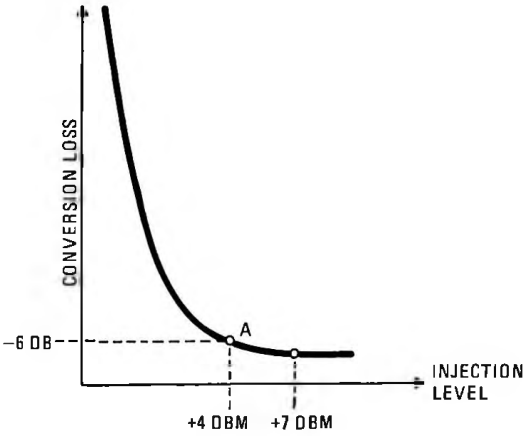

Figure 5-1. Effect of Injection Level on Conversion Loss

problem arises in measuring the injection level with an RF voltmeter. The injection voltage indicated by a peak detecting RF voltmeter (like the Boonton type 91H) at this level will be less than expected because of peak flattening. Consequently, a normal voltmeter indication is approximately 250 mV on a 91H. Point A in figure 5-1 corresponds to a 91H reading of approximately 250 mV.

5.5 TEST ADAPTERS

Adapter cables for use in signal tracing are included in the RF-550 Maintenance Repair Kit (RF Communications part number 1001-0189). The cables permit connection of test equipment directly to chassis connectors. They are available as part numbers 1001-0050 (male) and 1001-0051 (female). Figure 5-2 gives the information required for test adapter cable fabrication.

5.6 TEST POINT INFORMATION

Figure 5-3 summarizes test point and adjustment information for pw board assemblies in Card Cage A2A6 and the control group. See specific sections for more detailed information.

TABLE 5-2. CONVERSION OF DBM TO VOLTS RMS ACROSS 50 OHMS.
(Based on 0 dBm = 1 milliwatt)

(NEGATIVE DBM)			(POSITIVE DBM)
VOLTS	MILLIVOLTS	DBM	VOLTS
0.224	224	0	0.224
0.199	199	1	0.251
0.178	178	2	0.282
0.158	158	3	0.316
0.141	141	4	0.354
0.126	126	5	0.398
0.112	112	6	0.446
	99.9	7	0.501
	89.0	8	0.562
	79.3	9	0.630
	70.7	10	0.707
	63.0	11	0.793
	56.2	12	0.890
	50.1	13	0.999
	44.6	14	1.12
	39.8	15	1.26
	35.4	16	1.41
	31.6	17	1.58
	28.2	18	1.78
	25.1	19	1.99
	22.4	20	2.24
	19.9	21	2.51
	17.8	22	2.82
	15.8	23	3.16
	14.1	24	3.54
	12.6	25	3.98
	12.0	25.41	--
	11.2	26	4.46
	10.0	27	5.01
	8.90	28	5.62
	7.93	29	6.30
	7.07	30	7.07
	3.98	35	12.6
	2.24	40	22.4
	1.26	45	39.8
	0.707	50	70.7

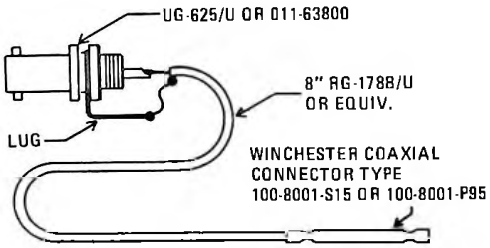

Figure 5-2. Test Adapter Cable Fabrication

5.7 LOGIC INTERPRETATION

Many counting and control functions in the RF-550 are implemented in digital integrated circuits. The basic circuit elements (gates, flip-flops, etc.) are binary in nature, that is, the output voltage of each can lie only in two permissible areas. The RF-550 uses only TTL logic.

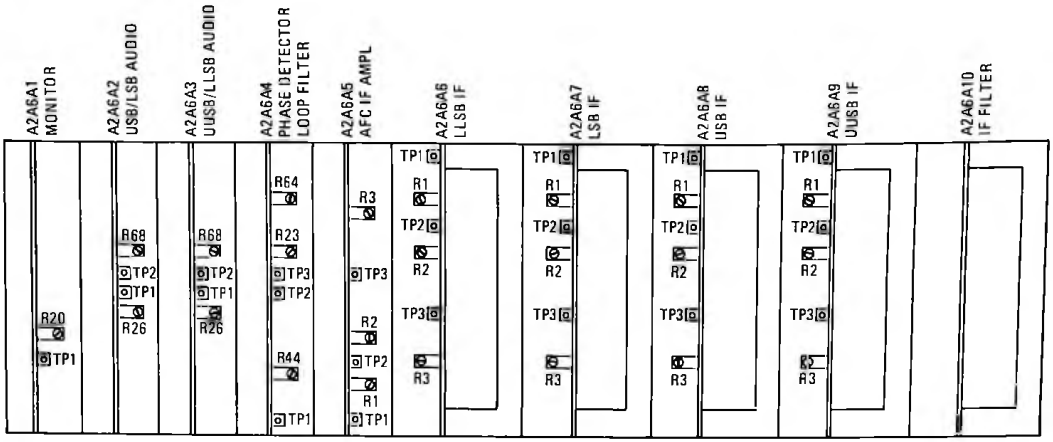

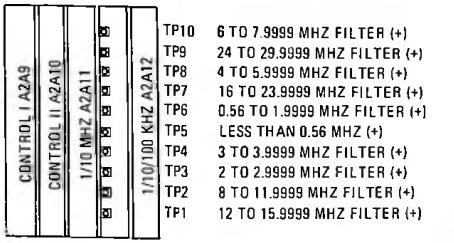

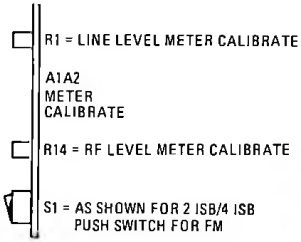

DCV	WIRE COLOR	TEST POINT
+200	VIO.	DISPLAY
+24	YEL.	A2A6A1-9
+15	RED	A2A6A1-4
−15	ORN.	A2A6A1-C
+5	GRN.	A2A13-J
−6	WHT., YEL.	A2A13-L
GND	BLK.	

A2A6A1

TP1 = FEED FORWARD ATTENUATOR CONTROL VOLTAGE

R20 = ATTENUATOR RANGE SET FOR FULL MONITOR OUTPUT WITH 100 uV RF INPUT

A2A6A2 – A2A6A3

TP1 = USB/UUSB LINE LEVEL DETECTOR OUTPUT

TP2 = LSB/LLSB LINE LEVEL DETECTOR OUTPUT

R26 = USB/UUSB MAXIMUM LINE OUTPUT ADJUSTMENT SET FOR +14 DBM, 600 OHM LOAD WITH FRONT PANEL LINE LEVEL CONTROL FULLY CW.

R68 = LSB/LLSB SAME AS R1

A2A6A4

TP1 = AFC ERROR

TP2 = PHASE DETECTOR OUTPUT

TP3 = AGC DETECTOR OUTPUT

R23 = PRELOCK GAIN SET FOR 7 DB ABOVE LOCK LEVEL AT P3

R44 = LOOP AMPLIFIER OFFSET ADJUSTMENT

R64 = LOCK THRESHOLD SET AT 0.5V WHEN NOT LOCKED MEASURED AT WIPER.

A2A6A5

TP1 = COHERENT AGC INPUT

TP2 = ATTENUATOR RANGE

TP3 = ATTENUATOR RANGE

R1 = SET 9V COHERENT AGC @ +9 DBM INPUT, 6 DB CARRIER SUPPRESSION AFC LOCKED.

R2 = SET AFC/IF GAIN @ IF OUTPUT 20 DB CARRIER SUPPRESSION TO 107 DB.

R3 = SET 4V COHERENT AGC @ −67 DBM RF INPUT, AFC LOCKED, 6 DB SUPPRESSED CARRIER.

A2A6A6 – A2A6A9

TP1 = AGC OUTPUT

TP2 = ATTENUATOR RANGE

TP3 = ATTENUATOR RANGE

R1 = SET 9V AGC @ +9 DBM RF INPUT

R2 = SET IF GAIN FOR 92 DB AGC OFF, ISB MODE.

R3 = SET 4V AGC @ −67 DBM RF INPUT

Figure 5-3. PWB Test Point Data Summary

The two possible states of each element are called logical "1" and logical "0". The assignment of voltage levels to these logic states is arbitrary; however, in this technical manual positive logic is standardized, which means we define the states as:

Logical 1: Normally more than 2.4V.

Logical 0: Normally less than 1V.

A gate is a circuit element whose output level depends on the levels at all of its inputs in a particular pattern.

AND Gate

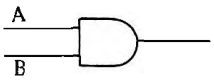

INPUTS A	INPUTS B	OUTPUT
0	0	0
1	0	0
0	1	0
1	1	1

For an AND gate, the output is 1 if and only if all inputs are 1. The output is 0 if any or all inputs are 0. A truth table that lists all possibilities for a two input AND is shown above.

NAND Gate

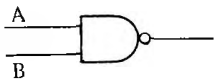

INPUTS A	INPUTS B	OUTPUT
0	0	1
1	0	1
0	1	1
1	1	0

The outputs of the NAND gate are the opposite of the AND gate.

OR Gate

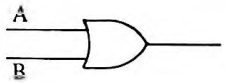

INPUTS A	INPUTS B	OUTPUT
0	0	0
1	0	1
0	1	1
1	1	1

The output of the OR gate is 1 if any (or all) inputs are 1.

NOR Gate

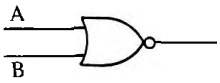

INPUTS A	INPUTS B	OUTPUT
0	0	1
1	0	0
0	1	0
1	1	0

The outputs of the NOR gate are the opposite of the OR gate.

A flip-flop has memory, i.e., it stores a logic state. The logical symbol of the binary storage element called a JK flip-flop (abbreviated FF) is shown below. The state of the FF is referred to by the condition of the Q output. For example, if the Q output is high, the FF contains a 1, or the FF has a 1 output. The $\overline{Q}$ output is always at the opposite level of the Q output.

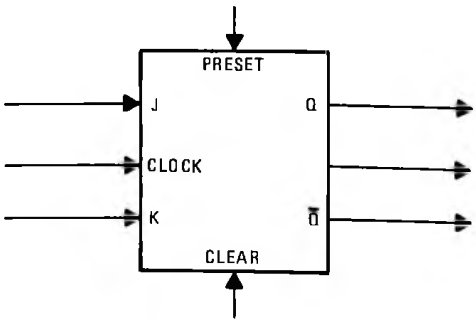

The state of the FF can be changed in two ways: by means of the CLOCK input or by means of PRESET and CLEAR inputs. The effect of an applied clock pulse on the state of an FF depends upon the J and K inputs. The J input must be high for an applied clock pulse to cause a 1 output; similarly, the K input must be high and a clock pulse applied to cause a 0 output. If both J and K are kept high, the FF toggles (changes state) on each applied clock pulse.

The PRESET and CLEAR inputs operate independently of the clock. A high level input to PRESET drives the FF to 1 (if it is not already at 1) while a high level input to CLEAR drives the FF to 0 (if it is not already at 0).

There are many variations of the basic JK flip-flop. For example, a circuit may have several J and K inputs.

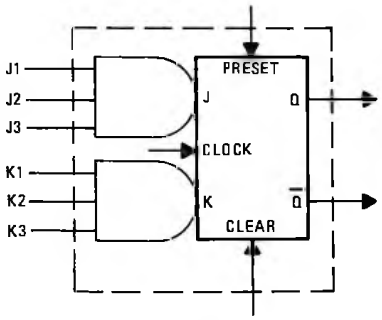

Because of the AND gates, all J's or K's must be high in order to toggle with an applied clock pulse.

Some circuits PRESET or CLEAR with a low level input instead of a high level. This is indicated by a "circle" at the appropriate input terminal.

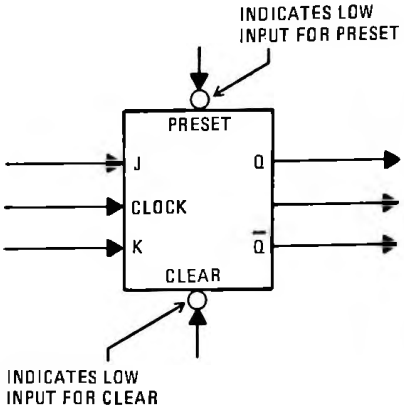

5.8 INTEGRATED CIRCUITS AND MINI-MODULES

The following pages contain logic and schematic diagrams of the Integrated circuit and mini-module types used in the RF-550. Table 5-2 is a quick reference list. These diagrams are presented to assist in troubleshooting and understanding functional operation of the equipment. The components themselves are not field repairable, and must be replaced if a malfunction is isolated to one of them.

NOTE

Integrated circuits called out in this manual as D50-0001-003 operational amplifiers may be replaced by any equivalent type 741 Op Amp.

TABLE 5-3. LIST OF IC'S USED IN THE RF-550

TYPE	MFR	FUNCTION	PAGE
CA3028A	RCA	Differential Cascade Amplifier	5-11
D50-0001-003	RF Comm.	Operational Amplifier	5-11
DD-700	Beckman	Decoder Driver	5-12
LM323K	National	+5V Regulator	5-13
LM324N	National	Quad Operational Amplifier	5-13
LM380N	National	Audio Power Amplifier	5-14
MC1458CP1	Motorola	Dual Operational Amplifier	5-14
MC1496L	Motorola	Balanced Modulator	5-15
MC4044P	Motorola	Phase Detector	5-15
MC7915P	Motorola	−15V Regulator	5-16
MD-108	Anzac	Double Balanced Mixer	5-16
MFC6040	Motorola	Electronic Attenuator	5-17
NE555V	Signetics	Monostable Multivibrator	5-17
SN7400N	Texas Inst.	Quad 2-Input NAND	5-18
SN74H00N	Texas Inst.	Quad 2-Input NAND	5-18
SN74L00N	Texas Inst.	Quad 2-Input NAND	5-18
SN74S00N	Texas Inst.	Quad 2-Input NAND	5-18
SN74LS00N	Texas Inst.	Quad 2-Input NAND	5-18
SN74L10N	Texas Inst.	Triple 3-Input NAND	5-18
SN74S10N	Texas Inst.	Triple 3-Input NAND	5-18
SN74S11N	Texas Inst.	Triple 3-Input AND	5-19
SN74LS11N	Texas Inst.	Triple 3-Input AND	5-19
SN74LS15N	Texas Inst.	Triple 3-Input AND	5-19
SN7430N	Texas Inst.	8-Input NAND	5-20
SN7472N	Texas Inst.	J-K Flip-Flop	5-20
SN7476N	Texas Inst.	Dual J-K Flip-Flop	5-21
SN7490AN	Texas Inst.	Decade Counter	5-21
SN74L90N	Texas Inst.	Decade Counter	5-21
SN7493AN	Texas Inst.	4-Bit Binary Counter	5-22
SN74S112N	Texas Inst.	Dual J-K Flip-Flop	5-22
SN74LS112N	Texas Inst.	Dual J-K Flip-Flop	5-22
SN74LS138N	Texas Inst.	3-to-8 Line Decoder	5-23
SN74160N	Texas Inst.	Decade Counter	5-23
SN74LS196N	Texas Inst.	Diode-by-5 Counter	5-24
SN76514L	Texas Inst.	Double Balanced Mixer	5-24
SP-752	Beckman	Display	5-12
SRA-1	Mini-Circuits	Double Balanced Mixer	5-25
SRA-1H	Mini-Circuits	Double Balanced Mixer	
UA7812KC	Fairchild	12V Regulator	5-25
UA7815UC	Fairchild	+15V Regulator	5-25
UA7818KC	Fairchild	18V Regulator	5-25
UA7824UC	Fairchild	+24V Regulator	5-25
0759-5150	RF Comm.	Double Balanced Mixer	5-26
NE5534AH	Signetics	Double Balanced Mixer	5-26

CA3028A,
DC to 120 MHz Differential/Cascode Amplifier

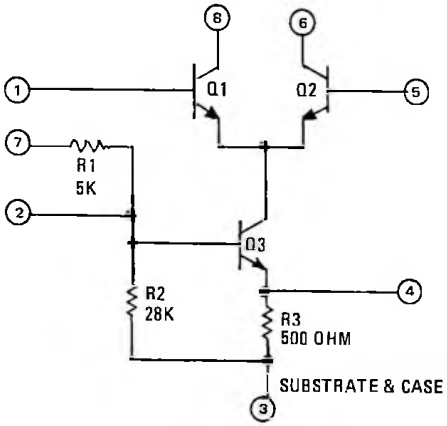

Circuit Schematic

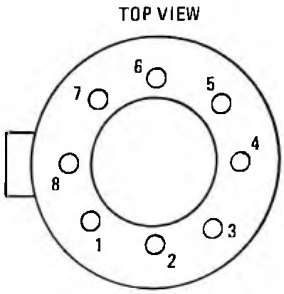

Package Diagram

D50-0001-003 Operational Amplifier (741)

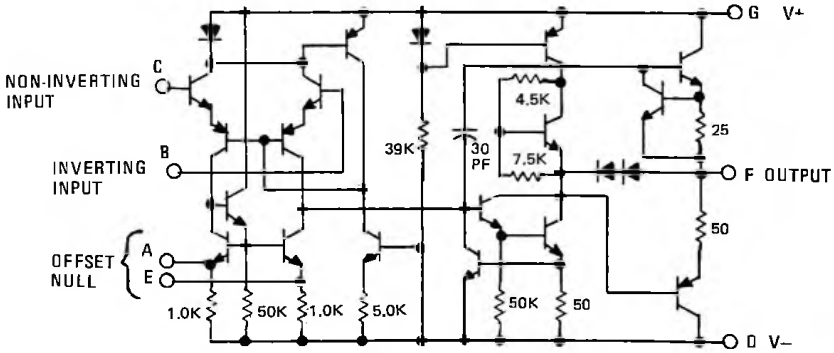

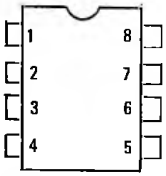

Package Diagram

PIN CONNECTIONS

RFC DASH NO.	A	B	C	D	E	F	G
-003	1	2	3	4	5	6	7

DD-700 Decoder/Driver and SP-352 Display

Logic Diagram - DD-700

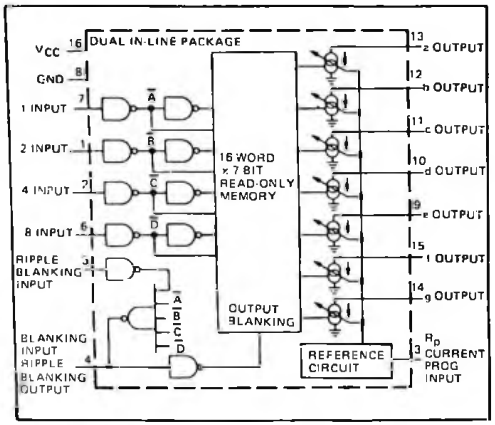

Truth Table - DD-700

DECIMAL OR FUNCTION	RBI	BCD INPUT 8	4	2	1	BI/RBO	SEGMENT DRIVE OUTPUT a	b	c	d	e	f	g	DISPLAY
0	1	0	0	0	0	1	0	0	0	0	0	0	1	0
1	X	0	0	0	1	1	1	0	0	1	1	1	1	1
2	X	0	0	1	0	1	0	0	1	0	0	1	0	2
3	X	0	0	1	1	1	0	0	0	0	1	1	0	3
4	X	0	1	0	0	1	1	0	0	1	1	0	0	4
5	X	0	1	0	1	1	0	1	0	0	1	0	0	5
6	X	0	1	1	0	1	0	1	0	0	0	0	0	6
7	X	0	1	1	1	1	0	0	0	1	1	1	1	7
8	X	1	0	0	0	1	0	0	0	0	0	0	0	8
9	X	1	0	0	1	1	0	0	0	0	1	0	0	9
10	X	1	0	1	0	1	0	0	0	1	0	0	0	10
11	X	1	0	1	1	1	1	1	0	0	0	0	0	11
12	X	1	1	0	0	1	0	1	1	0	0	0	1	12
13	X	1	1	0	1	1	1	0	0	0	1	0	1	13
14	X	1	1	1	0	1	0	1	1	0	0	0	0	14
15	X	1	1	1	1	1	0	1	1	1	0	0	0	15
BI	X	X	X	X	X	0	1	1	1	1	1	1	1	
RBI	0	0	0	0	0	0	1	1	1	1	1	1	1	
Rp	X	X	X	X	X	X	X	X	X	X	X	X	X	

NOTE: Logic "1" on all inputs and RBO is defined as the high TTL/DTL state. Logic "0" on outputs a – g is defined as the low or current sinking state (display on state). X is defined as "don't care" condition.

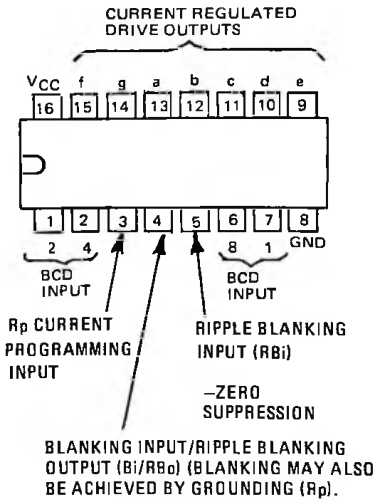

SEGMENT IDENTIFICATION	SEGMENT OUTPUT	CURRENT RATIO	DISPLAY PIN NUMBER	DISPLAY PIN NUMBER
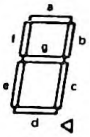	a	0.93	1	13
	b	1.00	2	12
	c	1.25	3	11
	d	1.00	4	10
	e	1.10	5	9
	f	0.93	6	15
	g	0.93	7	14

The Beckman DD-700 Decoder/Driver accepts TTL/DTL 8-4-2-1 binary coded decimal (BCD) information, and decodes this information to drive the seven segments of the Beckman display.

By sinking current through appropriate segments of a Beckman display, numbers 0 thru 9 can be displayed as shown in Truth Tables for each Driver/Decoder.

LM323K +5V Regulator

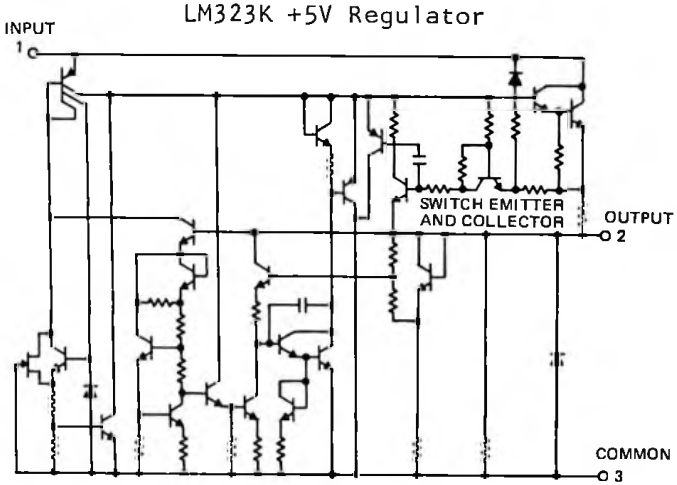

Circuit Schematic

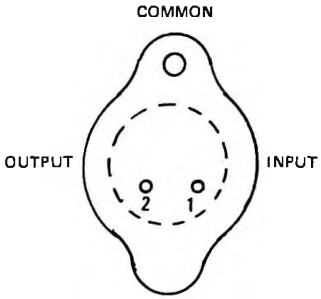

Package Diagram

LM324N Quad Op Amp

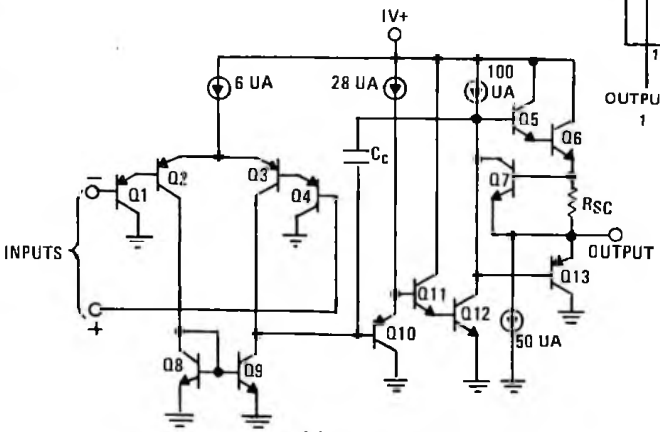

Circuit Schematic

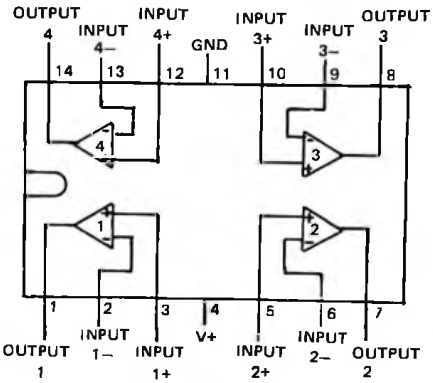

Package Diagram

LM380N
Audio Power Amplifier

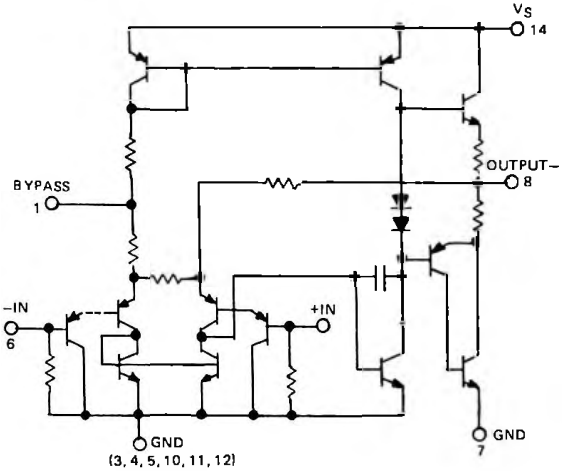

Circuit Schematic

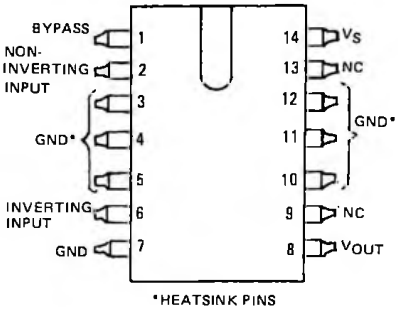

Package Diagram

MC1458CP1
Dual Op Amp

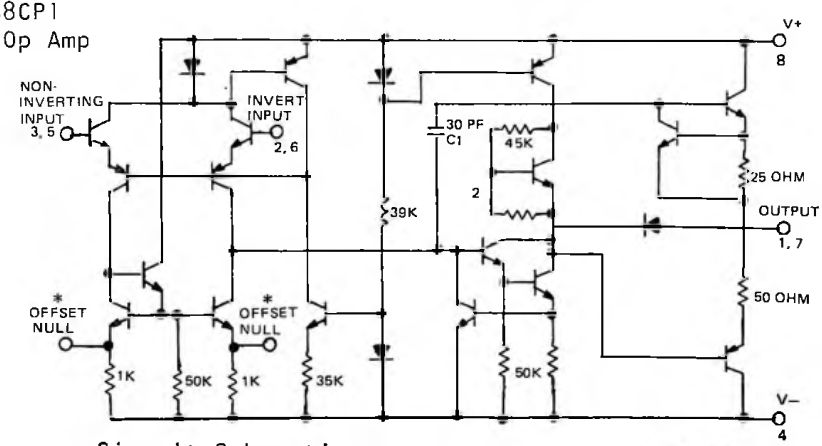

Circuit Schematic

*NOTE: OFFSET NULL NOT BROUGHT OUT ON MC1458CP1

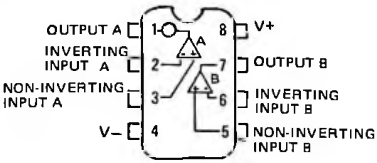

Package Diagram

MC1496L
Balanced Modulator

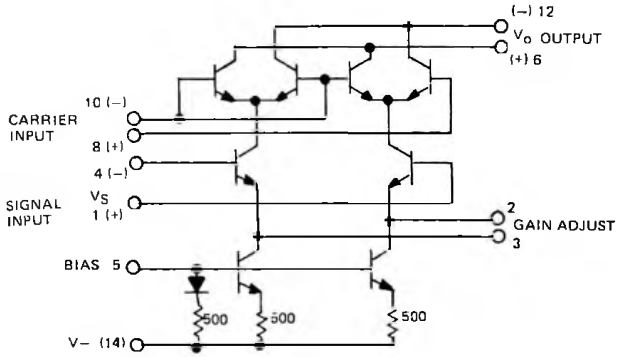

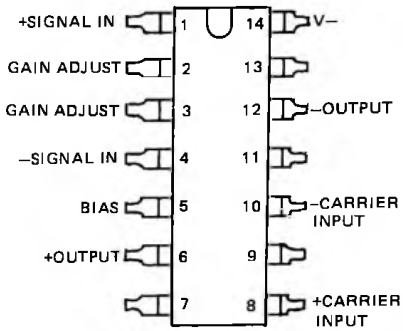

Package Diagram

MC4044P Phase Detector

This device contains two digital phase detectors and a charge pump circuit which converts MTTL inputs to a dc voltage level for use in frequency discrimination and phase-locked-loop applications.

The two phase detectors have common inputs. Phase-frequency detector 1 is locked in (indicated by both outputs high) when the negative transitions of the variable input (VI) and reference input (RI) are equal in frequency and phase. If the variable input is lower in frequency or lags in phase, the U1 (up) output goes low; conversely the D1 (down) output goes low when the variable input is higher in frequency or leads the reference input in phase. It is important to note that the duty cycles of the variable input and the reference input are not important since negative transitions control system operation.

Phase detector 2, on the other hand, is locked in when the variable input phase lags the reference phase by 90° (indicated by the U2 and D2 outputs alternately going low with equal pulse widths). If the variable input phase lags by more than 90°, U2 will remain low longer than D2, and, conversely, if the variable input phase lags the reference phase by less than 90°, D2 remains low longer. In this phase detector the variable input and the reference must have 50% duty cycles.

The charge pump accepts the phase detector outputs (U1 or U2 applied to PU, and D1 or D2 applied to PD) and converts them to fixed amplitude positive and negative pulses at the UF and DF outputs respectively. These pulses are applied to a lag-lead active filter, which incorporates external components, as well as the amplifier provided in the MC4344/4044 circuit. The filter provides a dc voltage proportional to the phase error.

ELECTRICAL CHARACTERISTICS

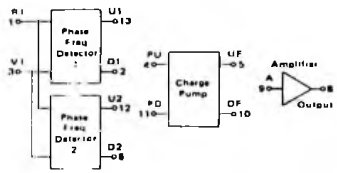

INPUT STATE	INPUT RI	INPUT VI	OUTPUT U1	OUTPUT D1	OUTPUT U2	OUTPUT D2
1	0	0	X	X	1	1
2	1	0	X	X	0	1
3	1	1	X	X	1	0
4	1	0	X	X	0	1
5	0	0	X	X	1	1
6	1	0	X	X	0	1
7	0	0	X	X	1	1
8	1	0	X	X	0	1
9	0	0	0	1	1	1
10	0	1	0	1	1	1
11	0	0	1	1	1	1
12	0	1	1	1	1	1
13	0	0	1	0	1	1
14	0	1	1	0	1	1
15	0	0	1	0	1	1
16	1	0	1	0	0	1
17	0	0	1	1	1	1

TRUTH TABLE

This is not strictly a functional truth table, i.e., it does not show all possible modes of operation. It is useful for dc testing.

1 X indicates output state unknown
2 U1 and D1 outputs are sequential, i.e., they must be sequenced in order shown
3 U2 and D2 outputs are combinational, i.e., they need only inputs shown to obtain outputs

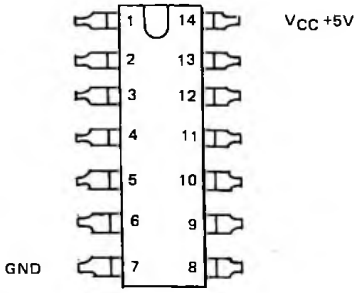

Package Diagram

MC7915P
-15V Regulator

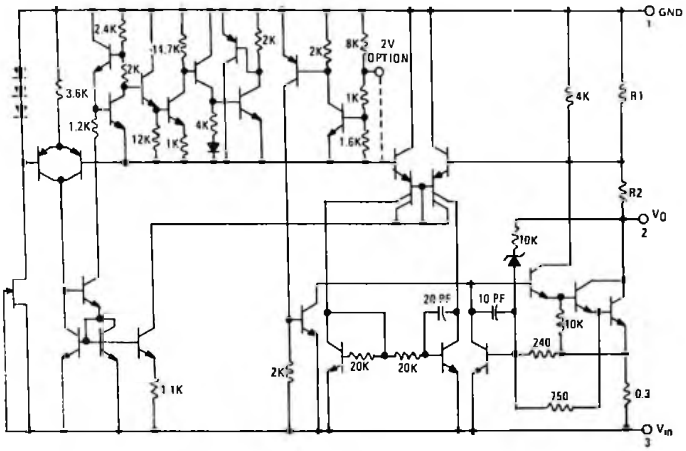

Circuit Schematic

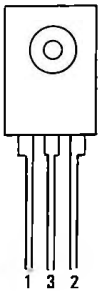

Package Diagram

MD-108
Double Balanced Mixer

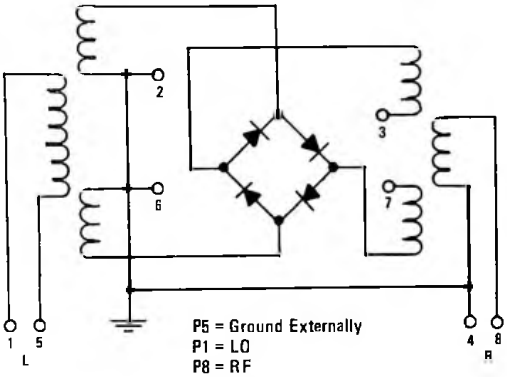

P5 = Ground Externally
P1 = LO
P8 = RF
P3 and P7 Connected together externally to form IF Port
P2, P4, P6 are grounded to case

Double balanced mixer provides LO and RF port bandwidths of 5-500 MHz, plus an IF port bandwidth of DC-500 MHz. Input to any two ports will produce the sum and difference frequencies of the input at the third port (within their respective frequencies).

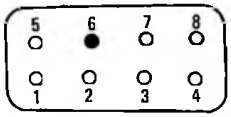

Package Diagram

MC3340P
Electronic Attenuator

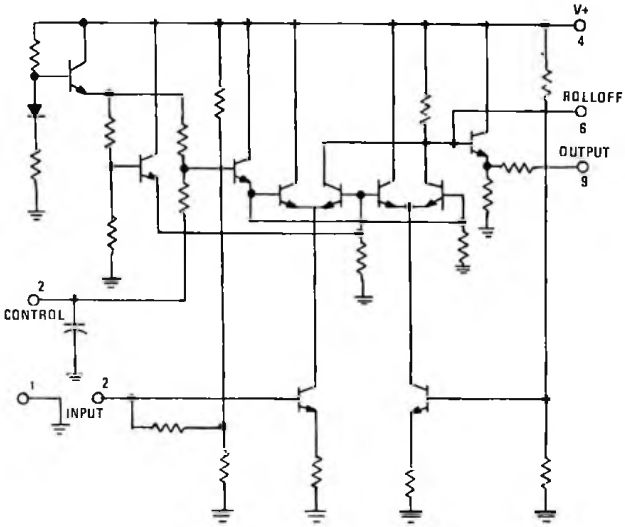

Circuit Schematic

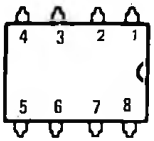

Package Diagram

NE555V Monostable Multivibrator

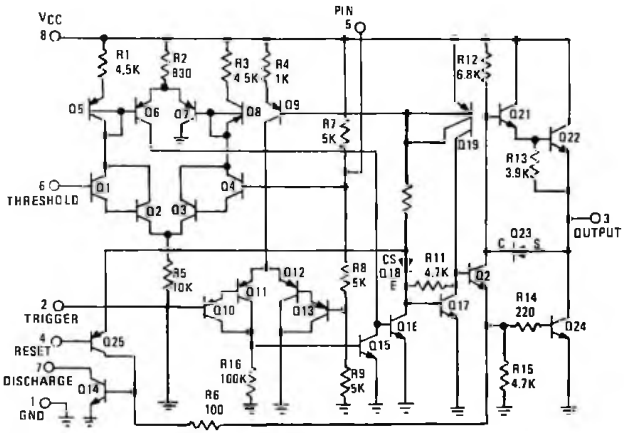

Circuit Schematic

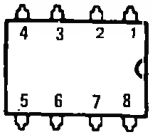

Package Diagram

SN7400N, SN74H00N, SN74L00N,
SN74S00N, SN74LS00N
Quad 2-Input NAND

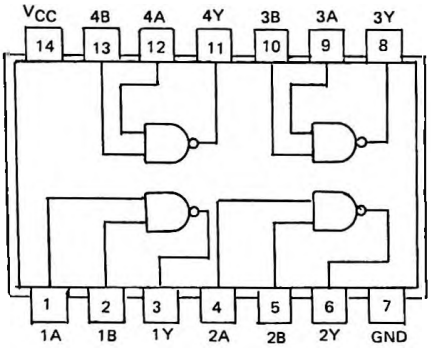

POSITIVE LOGIC: $Y = \overline{AB}$

NOTE: THE H, L, S, AND LS IN THE COMPONENT PART NUMBER, REFER TO PROPAGATION TIME AND CURRENT REQUIREMENTS. FURTHER INFORMATION MAY BE FOUND IN THE TEXAS INSTRUMENTS TTL DATA BOOK.

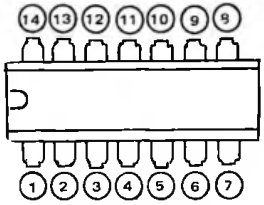

Package Diagram

SN74L10N, SN74S10N
Triple 3-Input NAND

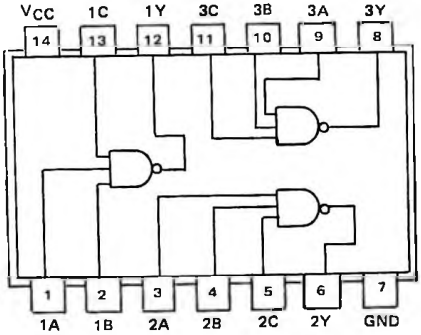

POSITIVE LOGIC: $Y = \overline{ABC}$

NOTE: THE L AND S IN PART NUMBER REFER TO PROPAGATION TIME AND CURRENT REQUIREMENTS. FOR FURTHER INFORMATION SEE THE TEXAS INSTRUMENTS TTL DATA BOOK.

SN74S11N, SN74LS11N
Triple 3-Input AND

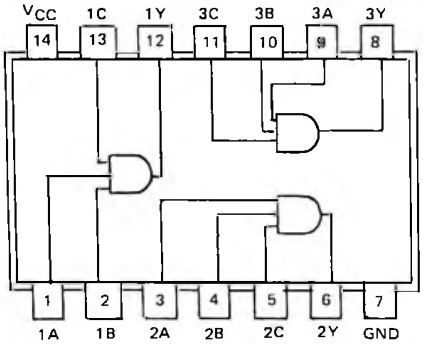

POSITIVE LOGIC: Y = ABC

NOTE: THE S AND LS IN THE PART NUMBERS REFER TO PROPAGATION TIME AND CURRENT REQUIREMENTS. FURTHER INFORMATION MAYBE FOUND IN THE TEXAS INSTRUMENT TTL DATA BOOK.

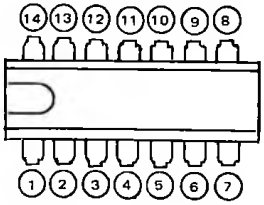

Package Diagram

SN74LS15N Triple 3-Input AND
(with Open-Collector Outputs)

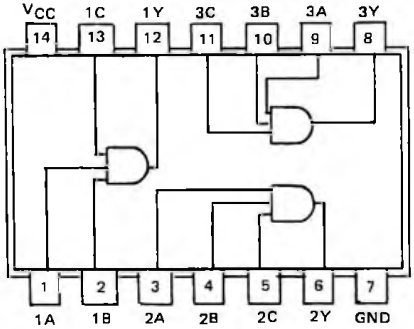

POSITIVE LOGIC: Y = ABC

SN7430N
8-Input NAND

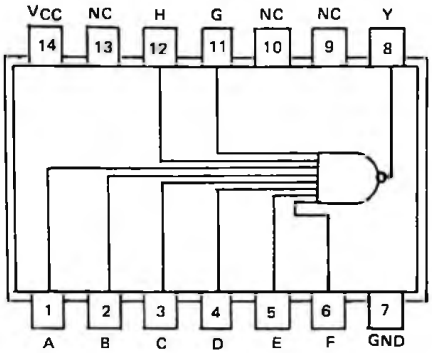

Positive Logic: $Y = \overline{ABCDEFGH}$

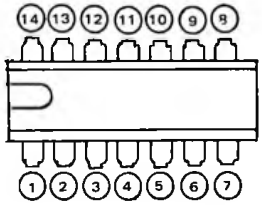

Package Diagram

SN7472N AND Gated J-K FLIP-FLOP
(with preset and clear)

FUNCTION TABLE

INPUTS					OUTPUTS	
PRESET	CLEAR	CLOCK	J	K	Q	$\overline{Q}$
L	H	X	X	X	H	L
H	L	X	X	X	L	H
L	L	X	X	X	H*	H*
H	H	↑	L	L	Q_0	$\overline{Q}_0$
H	H	↑	H	L	H	L
H	H	↑	L	H	L	H
H	H	↑	H	H	TOGGLE	

*Nonstable Condition
Positive Logic: J=J1+J2+J3; K1+K2+K3

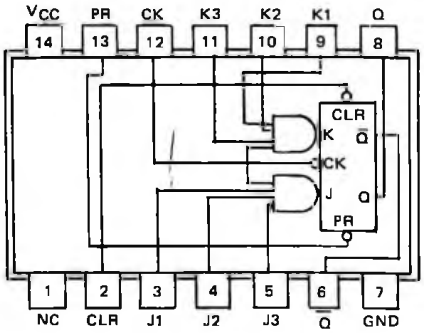

SN7476N
Dual J-K Flip-Flop
(With preset and clear)

FUNCTION TABLE

INPUTS					OUTPUTS	
PRESET	CLEAR	CLOCK	J	K	Q	$\bar{Q}$
L	H	X	X	X	H	L
H	L	X	X	X	L	H
L	L	X	X	X	H*	H*
H	H	↑	L	L	Q_0	$\bar{Q}_0$
H	H	↑	H	L	H	L
H	H	↑	L	H	L	H
H	H	↑	H	H	TOGGLE	

*Nonstable Condition

Circuit Schematic

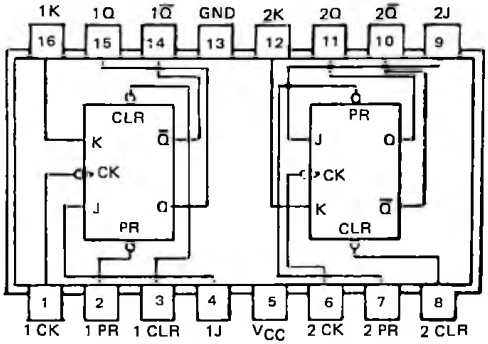

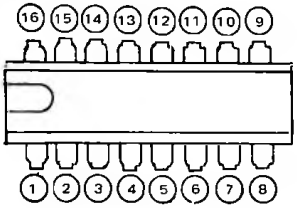

Package Diagram

SN7490AN, SN74L90N
Decade Counter

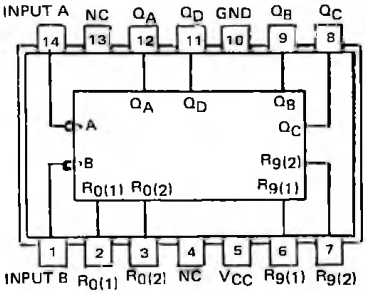

TYPES	TYPICAL POWER DISSIPATION
'90A	145 mW
'L90	20 mW

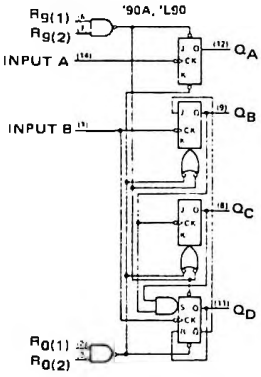

Functional Block Diagram

'90A, 'L90
BCD COUNT SEQUENCE
(See Note A)

COUNT	OUTPUT			
	Q_D	Q_C	Q_B	Q_A
0	L	L	L	L
1	L	L	L	H
2	L	L	H	L
3	L	L	H	H
4	L	H	L	L
5	L	H	L	H
6	L	H	H	L
7	L	H	H	H
8	H	L	L	L
9	H	L	L	H

'90A, 'L90
BI-QUINARY (5 2)
(See Note B)

COUNT	OUTPUT			
	Q_A	Q_D	Q_C	Q_B
0	L	L	L	L
1	L	L	L	H
2	L	L	H	L
3	L	L	H	H
4	L	H	L	L
5	H	L	L	L
6	H	L	L	H
7	H	L	H	L
8	H	L	H	H
9	H	H	L	L

'90A, 'L90
RESET/COUNT FUNCTION TABLE

RESET INPUTS				OUTPUT			
$R_{0(1)}$	$R_{0(2)}$	$R_{9(1)}$	$R_{9(2)}$	Q_D	Q_C	Q_B	Q_A
H	H	L	X	L	L	L	L
H	H	X	L	L	L	L	L
X	X	H	H	H	L	L	H
X	L	X	L	COUNT			
L	X	L	X	COUNT			
L	X	X	L	COUNT			
X	L	L	X	COUNT			

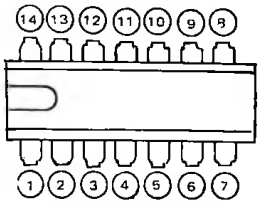

Package Diagram

Dynamic input activated by transistion from a high level to a low level

NOTES: A. Output Q_A is connected to input B for BCD count.
B. Output Q_D is connected to input A for bi-quinary count.

SN7493AN
4 Bit Binary Counter

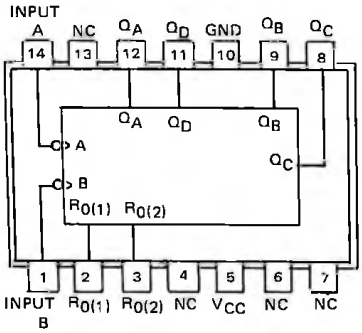

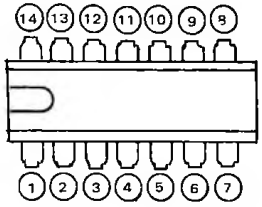

Package Diagram

RESET/COUNT FUNCTION TABLE

RESET INPUTS		OUTPUT			
$R_{0(1)}$	$R_{0(2)}$	Q_D	Q_C	Q_B	Q_A
H	H	L	L	L	L
L	X	COUNT			
X	L	COUNT			

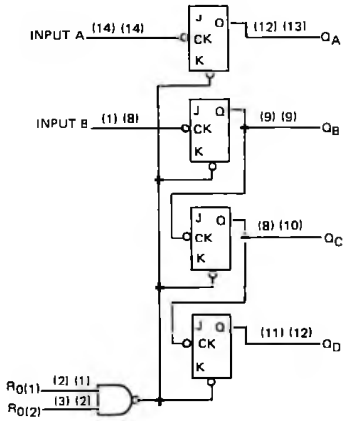

COUNT SEQUENCE

COUNT	OUTPUT			
	Q_D	Q_C	Q_B	Q_A
0	L	L	L	L
1	L	L	L	H
2	L	L	H	L
3	L	L	H	H
4	L	H	L	L
5	L	H	L	H
6	L	H	H	L
7	L	H	H	H
8	H	L	L	L
9	H	L	L	H
10	H	L	H	L
11	H	L	H	H
12	H	H	L	L
13	H	H	L	H
14	H	H	H	L
15	H	H	H	H

Output Q_A is connected to input B

SN74S112N, SN74LS112N

DUAL J-K NEGATIVE-EDGE-TRIGGERED FLIP-FLOPS WITH PRESET AND CLEAR

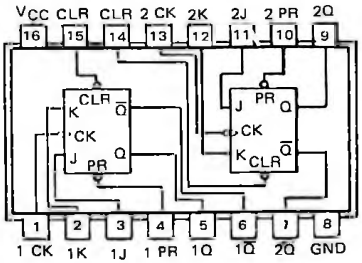

FUNCTION TABLE

INPUTS					OUTPUTS	
PRESET	CLEAR	CLOCK	J	K	Q	$\overline{Q}$
L	H	X	X	X	H	L
H	L	X	X	X	L	H
L	L	X	X	X	H	H
H	H	↓	L	L	Q_0	$\overline{Q}_0$
H	H	↓	H	L	H	L
H	H	↓	L	H	L	H
H	H	↓	H	H	TOGGLE	
H	H	H	X	X	Q_0	$\overline{Q}_0$

NOTE: THE S AND LS IN THE PART NUMBERS REFER TO PROPAGATION TIME AND CURRENT REQUIREMENTS. FURTHER INFORMATION MAY BE FOUND IN THE TEXAS INSTRUMENTS TTL DATA BOOK.

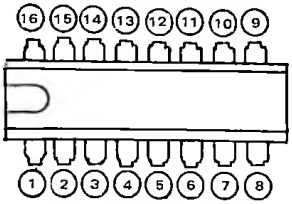

Package Diagram

SN74LS138N
3-to-8 Line Decoder

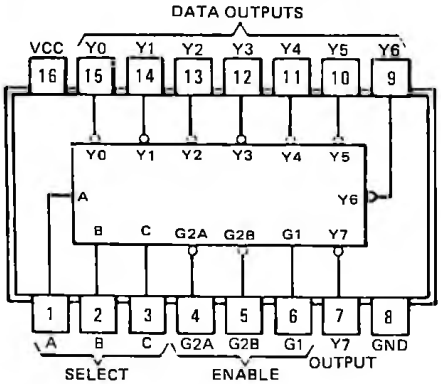

FUNCTION TABLE

INPUTS					OUTPUTS							
ENABLE		SELECT										
G1	G2*	C	B	A	Y0	Y1	Y2	Y3	Y4	Y5	Y6	Y7
X	H	X	X	X	H	H	H	H	H	H	H	H
L	X	X	X	X	H	H	H	H	H	H	H	H
H	L	L	L	L	L	H	H	H	H	H	H	H
H	L	L	L	H	H	L	H	H	H	H	H	H
H	L	L	H	L	H	H	L	H	H	H	H	H
H	L	L	H	H	H	H	H	L	H	H	H	H
H	L	H	L	L	H	H	H	H	L	H	H	H
H	L	H	L	H	H	H	H	H	H	L	H	H
H	L	H	H	L	H	H	H	H	H	H	L	H
H	L	H	H	H	H	H	H	H	H	H	H	L

*G2 = G2A + G2B
H = high level, L = low level, X = irrelevant

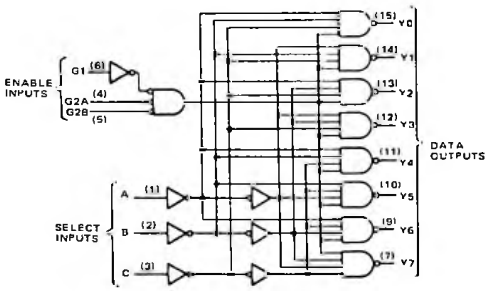

Functional Block Diagram

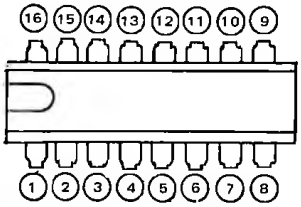

Package Diagram

SN74160N
Decade Counter

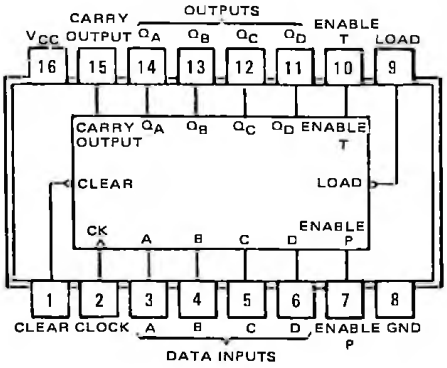

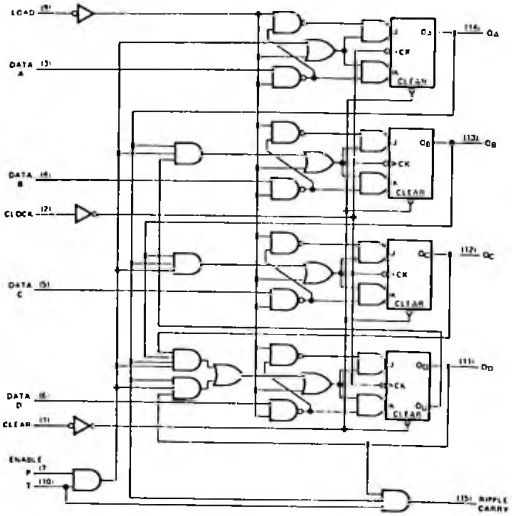

Functional Block Diagram

SN74LS196N
Divide-by-5 Counter

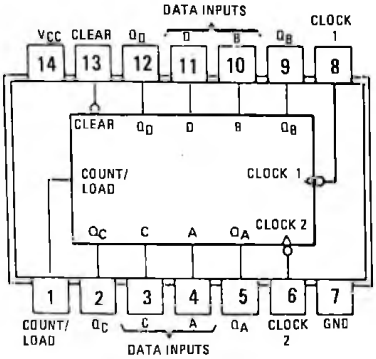

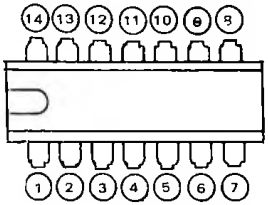

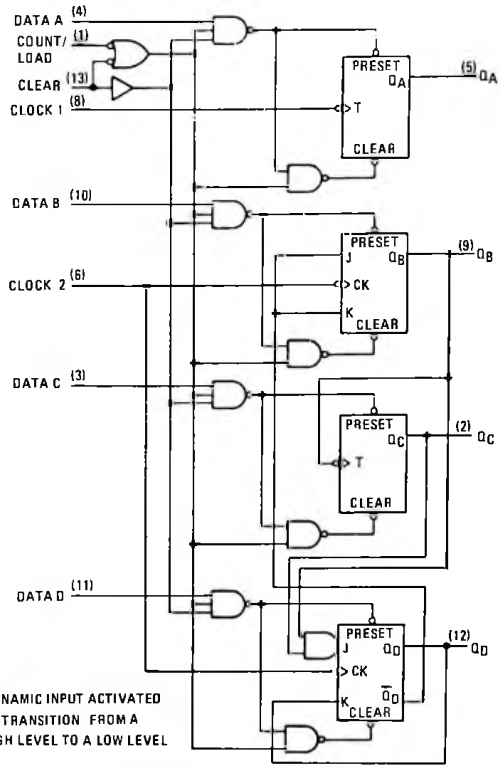

Functional Block Diagram

SN76514L
Double Balanced Mixer

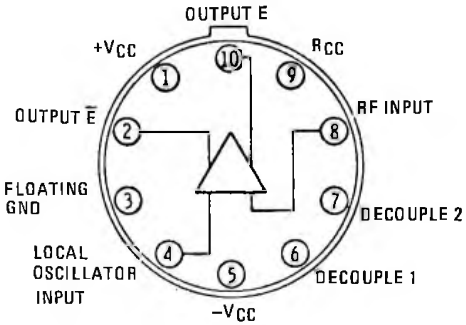

PIN 5 IS IN ELECTRICAL CONTACT WITH THE CASE

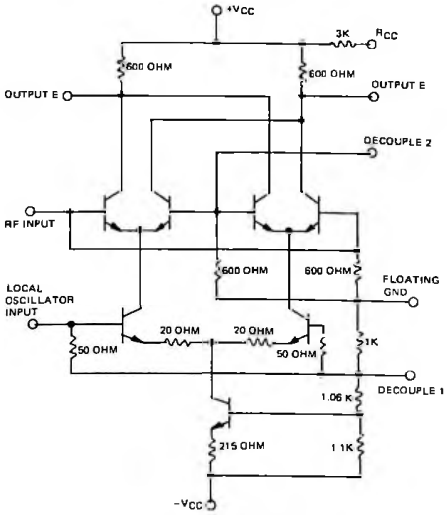

Circuit Schematic

SRA-1
Double Balanced Mixer

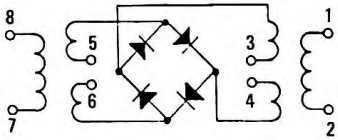

Circuit Schematic

PIN CONNECTIONS	
LO	8
RF	1
IF	3, 4
Ground	2, 5, 6, 7
Case Ground	2

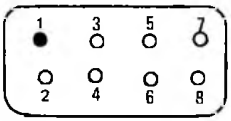

Package Diagram

UA7812KC, UA7815UC, UA7818KC, UA7824UC
12V, 15V, 18V and 24V Regulators (Respectively)

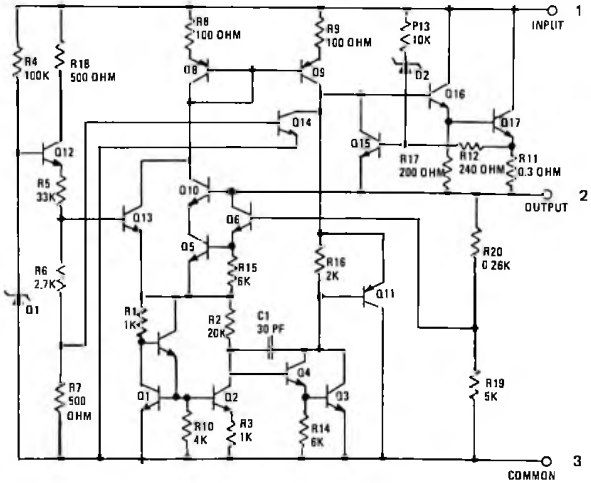

Circuit Schematic

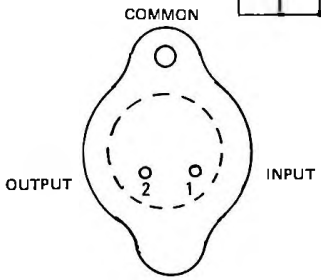

Package Diagram for
UA7812KC and UA7818KC

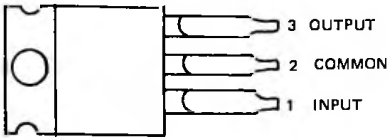

Package Diagram for
UA7815UC and UA7824UC

0759-5150 Double Balanced Mixer

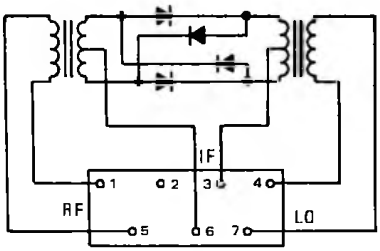

Circuit Schematic

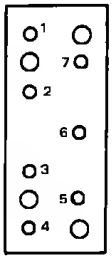

Package Diagram

8007C
FET-Input Operational Amplifier

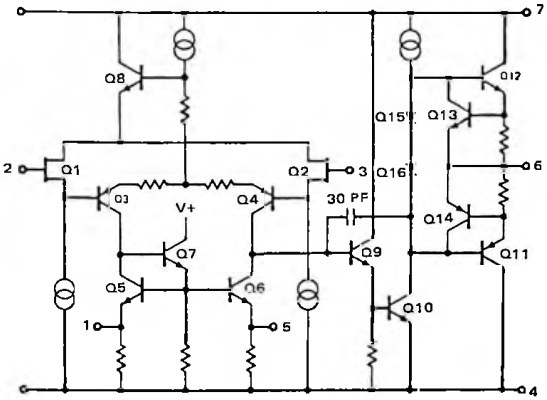

Circuit Schematic

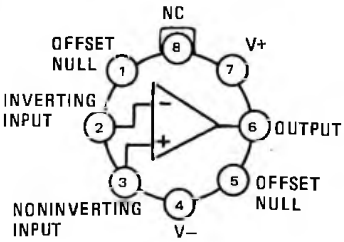

Base Diagram
(Top View)

NOTE: Pin 4 connected to case

PART 6

CHASSIS AND FRONT PANEL

6.1 GENERAL

This section contains parts location and identification information for all RF-550 elements not covered by a separate section. The front panel elements discussed in this section include the BCD frequency select switches, Meter Calibrate PWB A1A2, and Display PWB A1A3. Mother Board A6A11 and Chassis Interconnection elements are also contained in this section.

6.2 FRONT PANEL AND CHASSIS COMPONENT LOCATIONS

Figure 6-1 shows identifications and locations of all RF-550 elements not covered by separate sections in this manual. Parts information and manufacturer codes are contained in tables 6-2 and 6-3 at the end of this section.

6.3 FREQUENCY CONTROL SWITCHES (see OPTIONS for RF-583)

The frequency control switch group (S4-A through S4-F) is shown on figure 6-2. This digit switch assembly is a group of six lever-operated selector switches that control the RF-550 receive frequency in the LOCAL mode. With the exception of the TENS-of-MHz digit, each switch has ten possible positions (0 to 9). Each position yields a corresponding Negative True Binary Coded Decimal (BCD) output as shown in table 6-1.

TABLE 6-1. BINARY CODE VS. SWITCH POSITION

DIGIT SWITCH POSITION	DIGIT SWITCH OUTPUT			
	8 BIT	4 BIT	2 BIT	1 BIT
0	1	1	1	1
1	1	1	1	0
2	1	1	0	1
3	1	1	0	0
4	1	0	1	1
5	1	0	1	0
6	1	0	0	1
7	1	0	0	0
8	0	1	1	1
9	0	1	1	0

TYPICAL DIGIT SWITCH OUTPUT

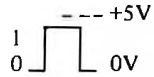

Each switch has a four wire output that yields a 4-bit BCD indication of the number selected. The TENS-of-MHz switch has only three positions (0, 1, 2), and a two wire output. Thus the entire six digit number is carried on the 22 wires shown. These wires are routed through P2 (figure 6-2), and J14 (figure 6-6 sheet 5 of 5), to the Control Logic PW Boards. Note that REMOTE/LOCAL switch S5 provides an enabling ground in the LOCAL position.

6.4 METER CALIBRATE PW BOARD

The Meter Calibrate PW Board (figure 6-4 contains the Line Audio and RF

Level calibrate potentiometers and incorporates several related functions as follows:

A1A2R1 is the Line Audio Meter calibrate potentiometer. This resistor is placed in series with LINE AUDIO Meter M1 and the desired LINE AUDIO output by Section S2-B of the RECEIVE MODE Switch (see figure 6-2). This calibration is made at the factory for operation into a standard Line Load impedance. If recalibration is required, terminate any of the available line outputs into a standard line impedance and monitor the line level with an output meter that is known to be in calibration. Adjust the associated Line Level adjust potentiometer (front panel screwdriver adjustment) for the desired output level as indicated on the calibrated output meter (nominally +10 dBm), and adjust calibrate potentiometer A1A2R1 for agreement. Recalibration should not be necessary unless component changes are made.

A1A2R14 is the RF LEVEL meter calibrate potentiometer. RF LEVEL Meter M2 and A1A2R14 are switched to measure the desired AGC voltage by section S1-A of the RF LEVEL switch. The AGC output at pin L of each IF Amplifier is connected to a FET switch on the Meter Calibrate PW Board; USB IF Amplifier to A1A2Q1, LSB IF Amplifier to A1A2Q2, UUSB IF Amplifier to A1A2Q2, UUSB IF Amplifier to A1A2Q3, and LLSB IF Amplifier to A1A2Q4. The appropriate USB, LSB, UUSB, or LLSB level select voltage from S1-A turns on the corresponding FET switch through A1A2CR1, CR2, CR3, or CR4, respectively, to meter the desired source. This calibration has been made at the factory so that an AGC voltage of 4 volts corresponds to an M2 indication of 100 uV. The meter can be recalibrated by adjusting the RF GAIN control for an indication of 4V AGC as measured at TB3 on the rear panel. AGC output pins are as follows:

- USB AGC TB3-8 to TB3-7 (GND)
- UUSB AGC TB3-9 to TB3-7 (GND)
- LSB AGC TB3-10 to TB3-7 (GND)
- LLSB AGC TB3-11 to TB3-7 (GND)

With 4V AGC indicated on a calibrated meter, adjust calibrating potentiometer A1A2R14 for an indication of 100 uV on M2. Recalibration should not be necessary unless component changes are made.

A1A2S1 on the Meter Calibrate PW Board configures the RF-550 for either 2 ISB/4 ISB or FM operation. This switch is positioned at the factory to agree with the option configuration ordered and should never require switching. A1A2VR1 and VR2 function to provide the BFO and VFO B+ voltages indicated.

6.5 DISPLAY PW BOARD

Refer to figure 6-6 for the following discussion. The Beckman DD-700 Decoder/Drivers used as U1 through U6 on the Display PW Board monitor the BCD information present on each of the 22 frequency control lines, and drive the seven segments of the Beckman displays. Supplementary information for these devices is included in Part 5, the General Information Maintenance Section, of this manual. Note that the displays, DS1 through DS3, use +200 volts from the A2A3 Power Supply as anode voltage. This is the only place that this relatively high voltage is used in the RF-550. The displays require a minimum of 160 volts dc for ionization. After the display has ionized, the voltage drop is approximately 135 volts.

This voltage is supplied to the anode connector for each display from A1A1-R1 through R6. R7 and R14 are connected to the decimal select pins. The display will always indicate the operating frequency of the RF-550 regardless of the frequency selection source.

6.6 MOTHER BOARD, A2A6A11

Figure 6-7 is a schematic diagram of Mother Board A2A6A11. Connectors for PW Boards A2A6A1 through A2A6-A10 are mounted on this board. Connections to the RF-550 wire harness are shown schematically. See figure 6-8 for interface information.

NOTICE

In some instances, the Integrated Circuit (IC) component types listed herein differ from those of the actual component. These components are physically and electronically interchangeable. Either type can be used for replacement purposes.

TABLE 6-2. PARTS LIST

REF DESIG	NOTES	NAME AND DESCRIPTION	FIG NO.
A1		Front Panel Assembly MFR 14304, PN 1920-1100	
F1		Fuse, Cartridge, 250V, 2 Amp: MFR 71400, PN AGC-2	
J1		Jack, Phone: MFR 82389, PN 13E	
LS1		Speaker: MFR 14304, PN LS0019	
M1		Meter, Line Level: MFR 14304, PN 1920-0629	
M2		Meter, Signal Strength: MFR 14304, PN 1920-0628	
MP1		Adjustment Tool: MFR 73899, PN 5284	
MP2, MP3	On R5 & R6	Dial, Pointer: MFR 14304, PN A724-0192	
MP4 to MP9	On S1, S2, S3, S6, S10, S12	Knob: MIL Type MS91528-0K2B	
MP10, MP11	On R7, & R8	Knob: MIL Type MS91528-1E2B	
MP12, MP13	On R5 & R6	Knob: MIL Type MS91528-1D2B	
MP14 to MP90		Connector Pin, Male: MIL Type MS17803-16-20	
P1, P2		Connector, Rectangular, 42 Pin MFR 81312, PN MRAC42PJTDH	
R1 to R4		Resistor, Variable, 5K: MFR 80294, PN A3059J-1-502M	
R5 to R7		Resistor, Variable, 5K: MIL Type RV4NAYSD502A	
R8		Resistor, Variable, 25K: MFR 14304, PN 1920-0634	
R9		Resistor, Fixed, Composition, 560 ohms, ±10%, 1/4W: MIL Type RCR07G561KM	
S1		Switch, Rotary, 4 Position, 1 Pole: MFR 14304, PN 1920-0601	
S2		Switch, Rotary, 7 Position, 3 Pole: MFR 14304, PN 1920-0606	
S3		Switch, Rotary, 4 Position, 2 Pole: MFR 14304, PN 1920-0605	
S4		Switch, Lever: MFR 14304, PN 1920-0633	
S5		Switch, Lever Lock: MFR 91929, PN 8E3021A	
S6		Switch, Rotary, 5 Position, 1 Pole: MFR 14304, PN 1920-0608	
S7		Switch, Toggle: MFR American Switch PN ST2-6	
S8		Indicator/Switch: MFR 51628, PN RLB-31B3-382	
S9		(Part of R8) Resistor, Variable, 25K: MFR 14304, PN 1920-0634	

TABLE 6-2. PARTS LIST (Cont)

REF DESIG	NOTES	NAME AND DESCRIPTION	FIG. NO.
S10		Switch, Rotary, 5 Position, 1 Pole: MFR 14304, PN 1920-0607	
S11		Indicator/Switch: MFR 51628, PN RLB-31B5-382	
S12		Switch, Rotary, 3 Position, 1 Pole: MFR 14304, PN 1920-0632	
A1A1		Cable Assembly, Display: MFR 14304, PN 1920-1130	
MP1 to MP25		Contact Pin, Crimp: MFR 81312, PN 100-4024P	
P1		Connector, Plug: MFR 81312, PN SREC26-PJ859	
A1A1A1		Display PWB Assembly: MFR 14304, PN 1920-2090	
DS1 to DS3		Display: MFR 73138, PN SP-752	
R1 to R6		Resistor, Fixed, Composition, 2.2K, ±5%, 1/4W: MIL Type RCR07G222JM	
R7		Resistor, Fixed, Composition, 430K, ±5%, 1/4W: MIL Type RCR07G434JM	
R8 to R13		Resistor, Fixed, Composition, 12K, ±5%, 1/4W: MIL Type RCR07G123JM	
U1 to U6		Decoder/Driver: MFR 73138, PN DD700	

REF DESIG	NOTES	NAME AND DESCRIPTION	FIG. NO.
XDS1 to XDS3		Socket, Display: MFR 73138, PN CS-352	
A1A2		Meter Calibration PWB Assembly: MFR 14304, PN 1920-2350	
CR1 to CR10		Diode: Type 1N3064	
Q1 to Q4		Transistor, J-FET, N-Channel: MFR 17856, PN U1899E	
R1		Resistor, Variable, 50K: MFR 14304, PN R30-0001-503	
R2		Resistor, Fixed, Composition, 10M, ±10%, 1/4W: MIL Type RCR07G106KM	
R3		Resistor, Fixed, Composition, 100K ±10%, 1/4W: MIL Type RCR07G104KM	
R4		Resistor, Fixed, Composition, 10K ±10%, 1/4W: MIL Type RCR07G103KM	
R5		Resistor, Fixed, Composition, 10M, ±10%, 1/4W: MIL Type RCR07G106KM	
R6		Resistor, Fixed, Composition, 10K, ±10%, 1/4W: MIL Type RCR07G104KM	

TABLE 6-2. PARTS LIST (Cont)

REF DESIG	NOTES	NAME AND DESCRIPTION	FIG. NO.
R7		Resistor, Fixed, Composition, 10K ±10%, 1/4W: MIL Type RCR07G103KM	
R8		Resistor, Fixed, Composition, 10M, ±10%, 1/4W: MIL Type RCR07G106KM	
R9		Resistor, Fixed, Composition, 100K, ±10%, 1/4W: MIL Type RCR07G104KM	
R10		Resistor, Fixed, Composition, 10K, ±10%, 1/4W: MIL Type RCR07G103KM	
R11		Resistor, Fixed, Composition, 10M, ±10%, 1/4W: MIL Type RCR07G106KM	
R12		Resistor, Fixed, Composition, 100K, ±10%, 1/4W: MIL Type RCR07G104KM	
R13		Resistor, Fixed, Composition, 10K, ±10%, 1/4W: MIL Type RCR07G103KM	
R14		Resistor, Variable, 50K: MFR 14304, PN R30-0001-503	
R15 to R16		Resistor, Fixed, Composition, 820 ohms, ±10%, 1/4W: MIL Type RCR07G821KM	
R17, R18		Not Used	

REF DESIG	NOTES	NAME AND DESCRIPTION	FIG. NO.
R19		Resistor, Fixed, Composition, 100 ohms, ±10%, 1/4W: MIL Type RCR07G101KM	
R20		Resistor, Fixed, Composition, 10K, ±10%, 1/4W: MIL Type RCR07G103KM	
S1		Switch, Dual-In-Line: MFR 00779, PN 435470-4	
VR1, VR2		Diode, Zener, 6V, ±1%: MFR 14304 PN 1920-0643	
A2		Chassis Assembly: MFR 14304, PN 1920-1025	
FL1		Tubular Bandpass Filter: MFR 14304,	
FL1P1, FL1P2		Connector, Coaxial: MFR 98291, PN 50-028-0000	
J1 to J4		Connector, Bulkhead BNC: MFR 00779, PN 225398-8	
J5		Connector, Phone Jack: MFR 82389, PN 3501FR	
J6, J7		Connector, Rectangular, 36 Pin: MFR 02660, PN 57-40360	
J8		Connector, Rectangular, 24 Pin: MFR 02660, PN 57-40240	
J9 to J11		Not Used	
J12		Connector, Rectangular, 26 Pin: MFR 81312, PN SREC26SJT-859	

TABLE 6-2. PARTS LIST (Cont)

REF DESIG	NOTES	NAME AND DESCRIPTION	FIG. NO.
J13, J14	1	Connector, Rectangular, 42 Pin: MFR 81312, PN MRAC42SJ	
TB1		Terminal Board, 12 Terminals: MFR 75382, PN 600A-C-12F	
TB2, TB3		Terminal Board, 12 Lugs: MFR 75382, PN 411-1904-12	
XA1, XA2		Not Used	
XA3	1	Connector, Rectangular, 20 Pin: MFR 81312, PN MRAC20PJT	
XA4		Connector, PWB: MFR 13511, PN 225-21021-401-117	
XA5	1	Connector, Rectangular, 20 Pin: MFR 81312 MRAC20SN7	
XA6		Not Used	
XA7, XA8	1	Connector, Rectangular, 20 Pin: MFR 81312 MRAC20SN7	
XA9 to XA12		Connector, PWB: MFR 02660 PN 225-22221-401-117	
XA13	1	Connector, Rectangular, 14 Pin: MFR 81312, PN MRAC14SN7	
XA14, XA15		Connector, Rectangular, 20 Pin: MFR 81312 MRAC20SN7	
A2A6A11		Mother Board, PWB Assembly: MFR 14304, PN 1920-2360	
XA1 to XA10		Connector, PWB: MFR 02660, PN 225-21021-401-117	

NOTE 1: The following is a list of various connector pins used with the Chassis Assembly A2.

Connector Blocks:

Connector Pin, Male: MIL type MS17803-16-20
Connector Pin, Female: MIL type MS17804-16-20
Connector Pin, Coaxial: MFR 81312, PN 100-8001S95
Connector Pin, Female: MFR 81312, PN 100-4024S

TABLE 6-3. INDEX TO MANUFACTURER CODES

MFR CODE	MFR NAME AND ADDRESS
00779	Amp, Inc. P.O. Box 3608 Harrisburg, Pennsylvania 17105
02660	Bunker Ramo Corporation Connector Division 2801 South 25th Avenue Broadview, Illinois 60153
14304	Harris Corporation RF Communications Division 1680 University Avenue Rochester, New York 14610
17856	Siliconix, Inc. 2201 Laurelwood Road Santa Clara, California 95054
51628	Tec, Inc. 9800 North Oracle Road Tucson, Arizona 85704
71400	Bussman Mfg. Division McGraw-Edison Company 2536 West University Street St. Louis, Missouri 63107
73138	Beckman Instruments, Inc. Helipot Division 2500 Harbor Blvd. Fullerton, California 92634
73899	JFD Electronics Corporation 15th at 62nd Street Brooklyn, New York 11219
75382	Kulka Electric Corp. 633-643 South Fulton Avenue Mount Vernon, New York 10550
80294	Bourns, Inc. Instrument Division 6135 Magnolia Avenue Riverside, California 92506
81312	Winchester Electronics Division Litton Industries, Inc. Main Street and Hillside Avenue Oakville, Connecticut 06779
82389	Switchcraft, Inc. 5555 North Elston Avenue Chicago, Illinois 60630

TABLE 6-3. INDEX TO MANUFACTURER CODES (Cont)

MFR CODE	MFR NAME AND ADDRESS
91929	Honeywell, Inc. Micro Switch Division Chicago and Spring Streets Freeport, Illinois 61032
98291	Sealectro Corp. 225 Hoyt Mamaroneck, New York 10544
	American Switch Corp. Sadler Street Gloucester, Massachuset 01930

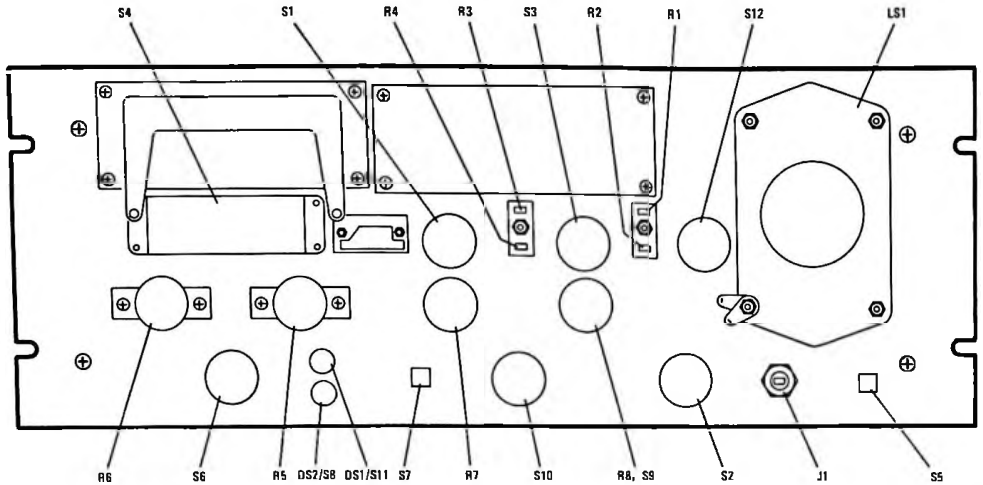

FRONT PANEL (REAR VIEW)

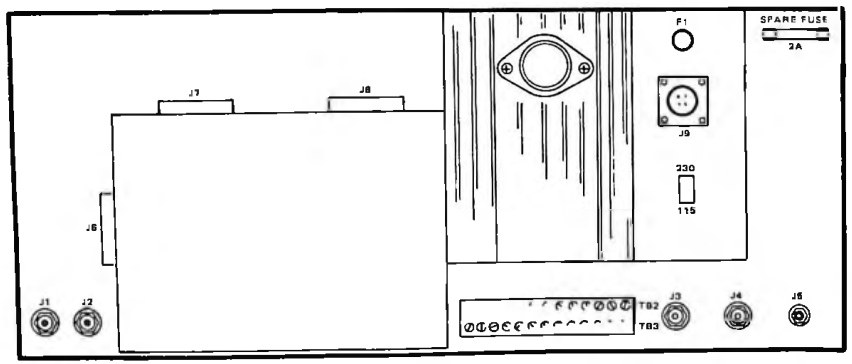

REAR VIEW

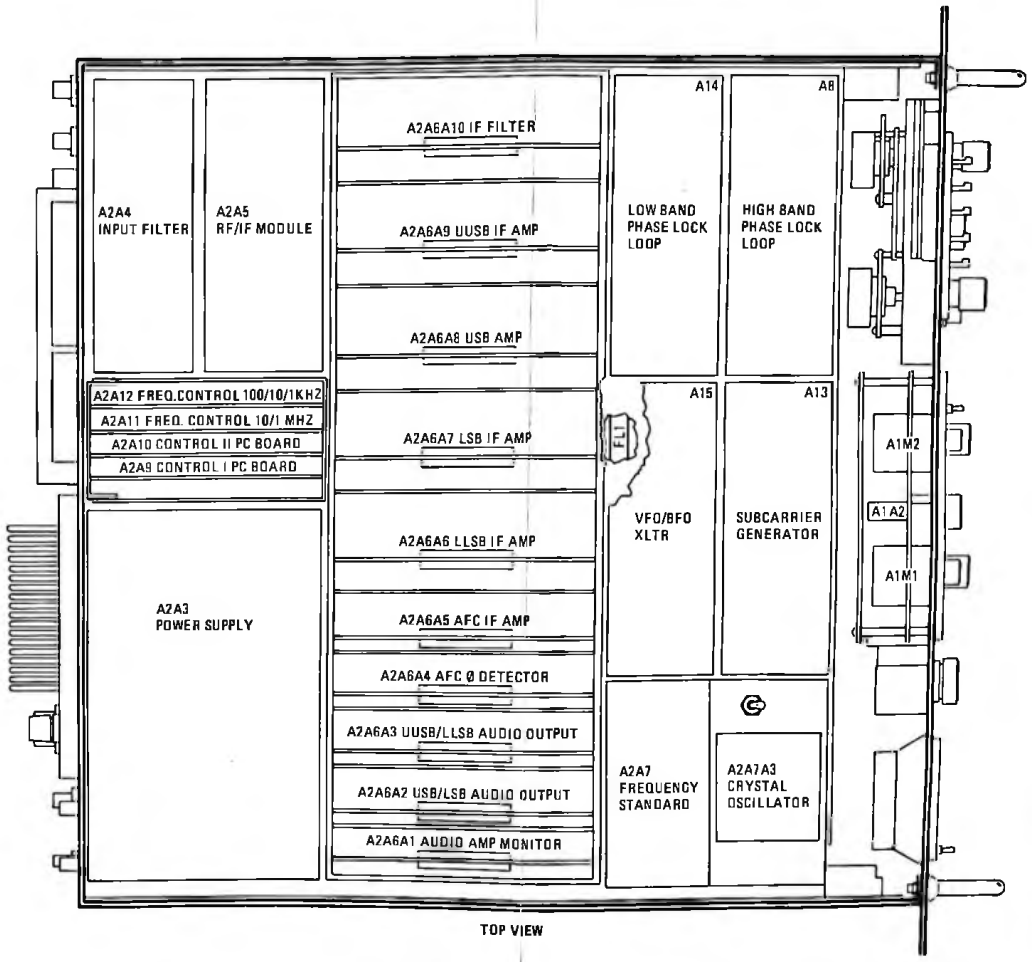

TOP VIEW

Figure 6-1. RF-550 Component Locations

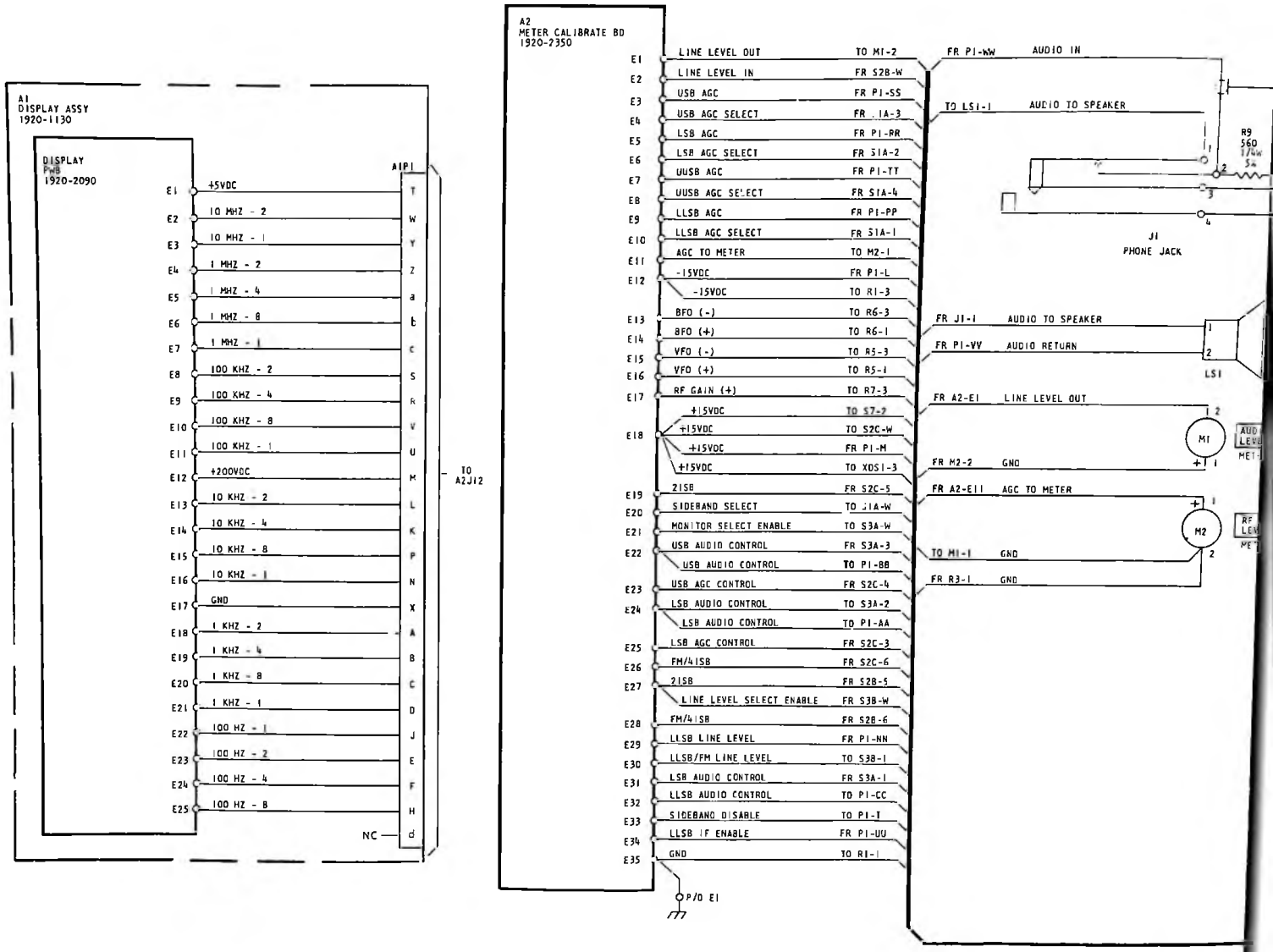
A1
DISPLAY ASSY
1920-1130
DISPLAY
PWB
1920-2090
A1P1
E1 +5VDC T
E2 10 MHZ - 2 W
E3 10 MHZ - 1 Y
E4 1 MHZ - 2 Z
E5 1 MHZ - 4 a
E6 1 MHZ - 8 b
E7 1 MHZ - 1 c
E8 100 KHZ - 2 S
E9 100 KHZ - 4 R
E10 100 KHZ - 8 V
E11 100 KHZ - 1 U
E12 +200VDC M
E13 10 KHZ - 2 L
E14 10 KHZ - 4 K
E15 10 KHZ - 8 P
E16 10 KHZ - 1 N
E17 GND X
E18 1 KHZ - 2 A
E19 1 KHZ - 4 B
E20 1 KHZ - 8 C
E21 1 KHZ - 1 D
E22 100 HZ - 1 J
E23 100 HZ - 2 E
E24 100 HZ - 4 F
E25 100 HZ - 8 H
NC d
TO A2J12
A2
METER CALIBRATE BD
1920-2350
E1 LINE LEVEL OUT TO M1-2
E2 LINE LEVEL IN FR S2B-W
E3 USB AGC FR P1-SS
E4 USB AGC SELECT FR S1A-3
E5 LSB AGC FR P1-RR
E6 LSB AGC SELECT FR S1A-2
E7 UUSB AGC FR P1-TT
E8 UUSB AGC SELECT FR S1A-4
E9 LLSB AGC FR P1-PP
E10 LLSB AGC SELECT FR S1A-1
E11 AGC TO METER TO M2-1
E12 -15VDC FR P1-L
-15VDC TO R1-3
E13 BFO (-) TO R6-3
E14 BFO (+) TO R6-1
E15 VFO (-) TO R5-3
E16 VFO (+) TO R5-1
E17 RF GAIN (+) TO R7-3
E18 +15VDC TO S7-2
+15VDC TO S2C-W
+15VDC FR P1-M
+15VDC TO XDS1-3
E19 2ISB FR S2C-5
E20 SIDEBAND SELECT TO S1A-W
E21 MONITOR SELECT ENABLE TO S3A-W
E22 USB AUDIO CONTROL FR S3A-3
USB AUDIO CONTROL TO P1-BB
E23 USB AGC CONTROL FR S2C-4
E24 LSB AUDIO CONTROL TO S3A-2
LSB AUDIO CONTROL TO P1-AA
E25 LSB AGC CONTROL FR S2C-3
E26 FM/4ISB FR S2C-6
E27 2ISB FR S2B-5
LINE LEVEL SELECT ENABLE FR S3B-W
E28 FM/4ISB FR S2B-6
E29 LLSB LINE LEVEL FR P1-NN
E30 LLSB/FM LINE LEVEL TO S3B-1
E31 LSB AUDIO CONTROL FR S3A-1
E32 LLSB AUDIO CONTROL TO P1-CC
E33 SIDEBAND DISABLE TO P1-T
E34 LLSB IF ENABLE FR P1-UU
E35 GND TO R1-1
P/O E1
FR P1-WW AUDIO IN
TO LS1-1 AUDIO TO SPEAKER
R9
560
1/4W
5%
J1
PHONE JACK
FR J1-1 AUDIO TO SPEAKER
FR P1-VV AUDIO RETURN
LS1
FR A2-E1 LINE LEVEL OUT
M1
FR M2-2 GND
FR A2-E11 AGC TO METER
M2
TO M1-1 GND
FR R3-1 GND

NOTE
1.
2.

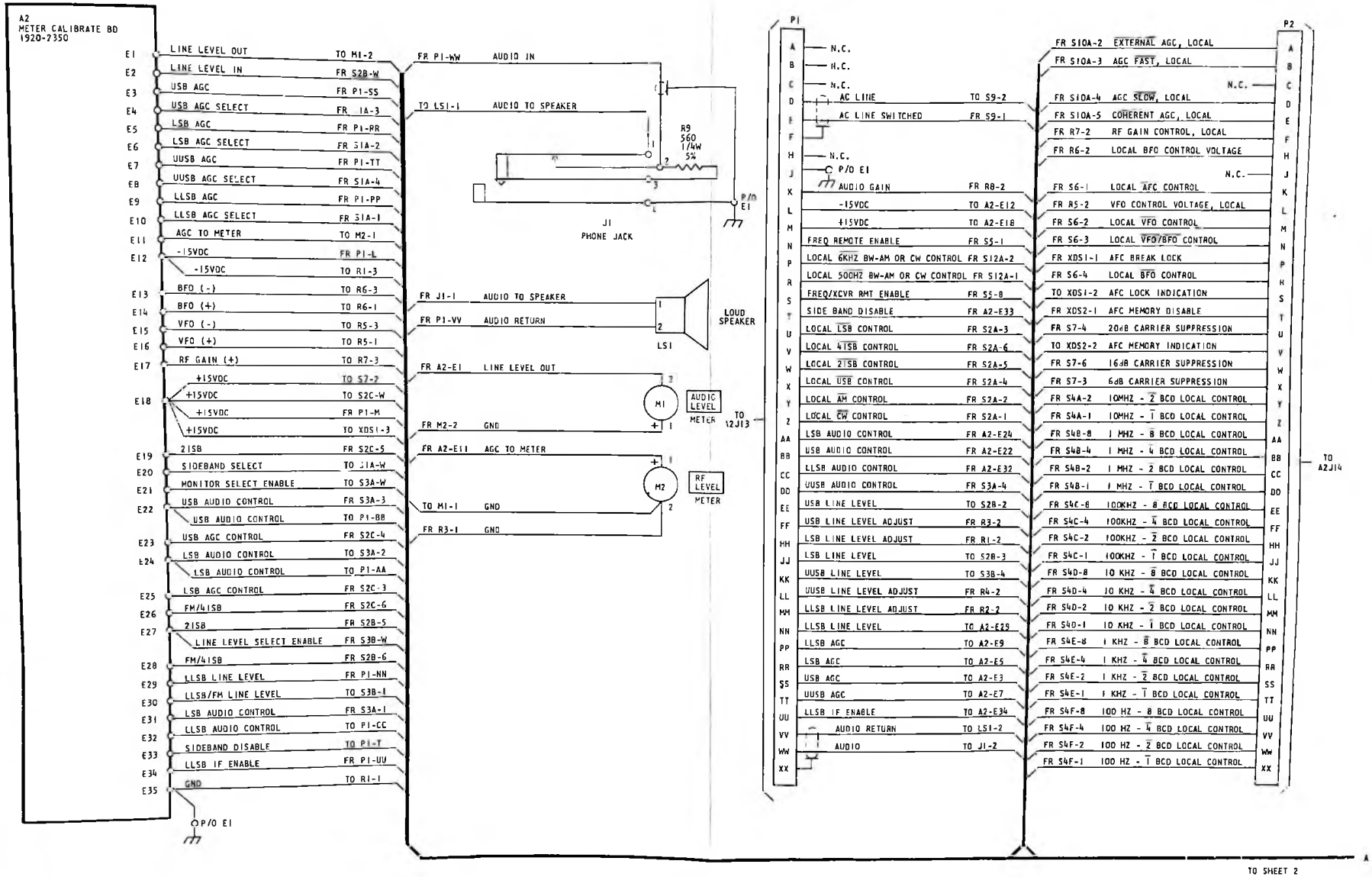

NOTES:

1. Prefix all reference designations with A1, except A2J12, A2J13, and A2J14.
2. Wafer switches viewed from knob end.

Figure 6-2. Front Panel Interconnection Diagram (Sheet 1 of 3)

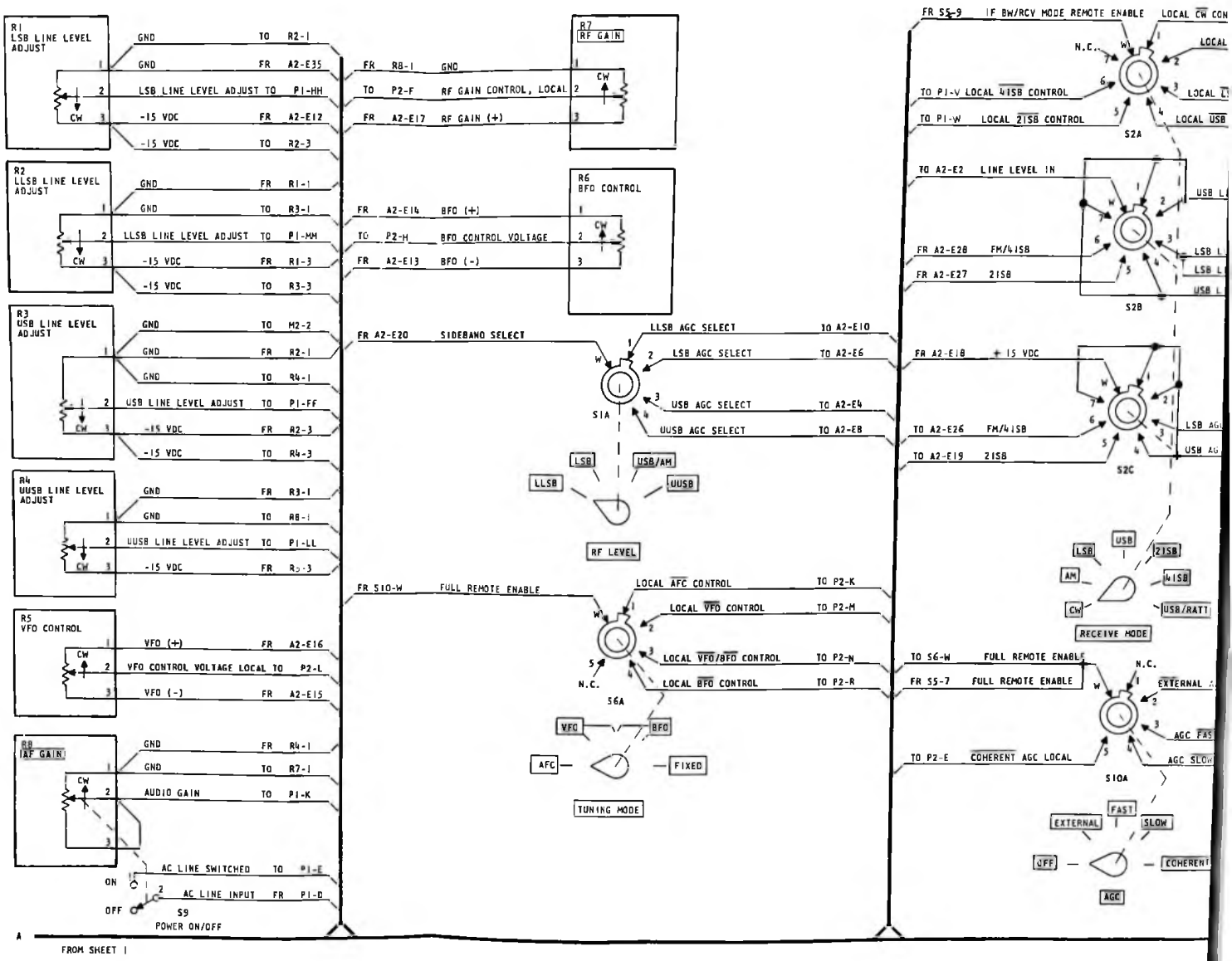
R1
LSB LINE LEVEL ADJUST
GND TO R2-1
GND FR A2-E35
LSB LINE LEVEL ADJUST TO P1-HH
-15 VDC FR A2-E12
-15 VDC TO R2-3
R2
LLSB LINE LEVEL ADJUST
GND FR R1-1
GND TO R3-1
LLSB LINE LEVEL ADJUST TO P1-MM
-15 VDC FR R1-3
-15 VDC TO R3-3
R3
USB LINE LEVEL ADJUST
GND TO M2-2
GND FR R2-1
GND TO R4-1
USB LINE LEVEL ADJUST TO P1-FF
-15 VDC FR R2-3
-15 VDC TO R4-3
R4
UUSB LINE LEVEL ADJUST
GND FR R3-1
GND TO R8-1
UUSB LINE LEVEL ADJUST TO P1-LL
-15 VDC FR R3-3
R5
VFO CONTROL
VFO (+) FR A2-E16
VFO CONTROL VOLTAGE LOCAL TO P2-L
VFO (-) FR A2-E15
R8
IAF GAIN
GND FR R4-1
GND TO R7-1
AUDIO GAIN TO P1-K
AC LINE SWITCHED TO P1-E
AC LINE INPUT FR P1-D
ON
OFF
S9
POWER ON/OFF
FROM SHEET 1
R7
RF GAIN
FR R8-1 GND
TO P2-F RF GAIN CONTROL, LOCAL
FR A2-E17 RF GAIN (+)
R6
BFO CONTROL
FR A2-E14 BFO (+)
TO P2-H BFO CONTROL VOLTAGE
FR A2-E13 BFO (-)
FR A2-E20 SIDEBAND SELECT
LLSB AGC SELECT TO A2-E10
LSB AGC SELECT TO A2-E6
USB AGC SELECT TO A2-E4
UUSB AGC SELECT TO A2-E8
S1A
LSB
USB/AM
LLSB
UUSB
RF LEVEL
FR S10-W FULL REMOTE ENABLE
LOCAL AFC CONTROL TO P2-K
LOCAL VFO CONTROL TO P2-M
LOCAL VFO/BFO CONTROL TO P2-N
LOCAL BFO CONTROL TO P2-R
N.C.
S6A
VFO
BFO
AFC
FIXED
TUNING MODE
FR S5-9 IF BW/RCV MODE REMOTE ENABLE
LOCAL CW CON
LOCAL
TO P1-V LOCAL 4ISB CONTROL
TO P1-W LOCAL 2ISB CONTROL
LOCAL USB
S2A
TO A2-E2 LINE LEVEL IN
FR A2-E28 FM/4ISB
FR A2-E27 2ISB
S2B
FR A2-E18 +15 VDC
TO A2-E26 FM/4ISB
TO A2-E19 2ISB
S2C
LSB
USB
2ISB
AM
4ISB
CW
USB/RATT
RECEIVE MODE
TO S6-W FULL REMOTE ENABLE
FR S5-7 FULL REMOTE ENABLE
EXTERNAL
AGC FAS
AGC SLOW
TO P2-E COHERENT AGC LOCAL
S10A
FAST
EXTERNAL
SLOW
OFF
COHERENT
AGC

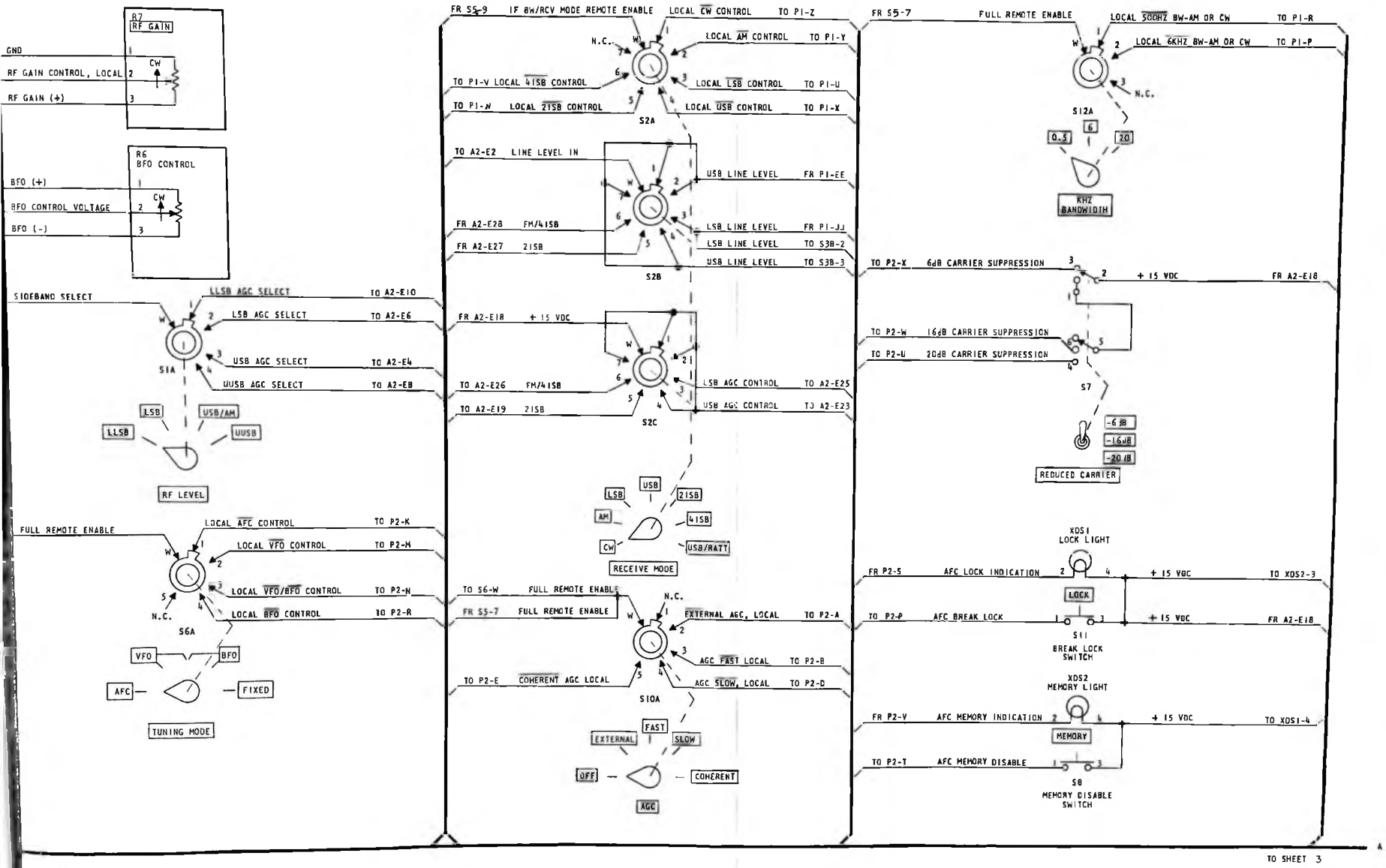

Figure 6-2. Front Panel Interconnection Diagram (Sheet 2 of 3)

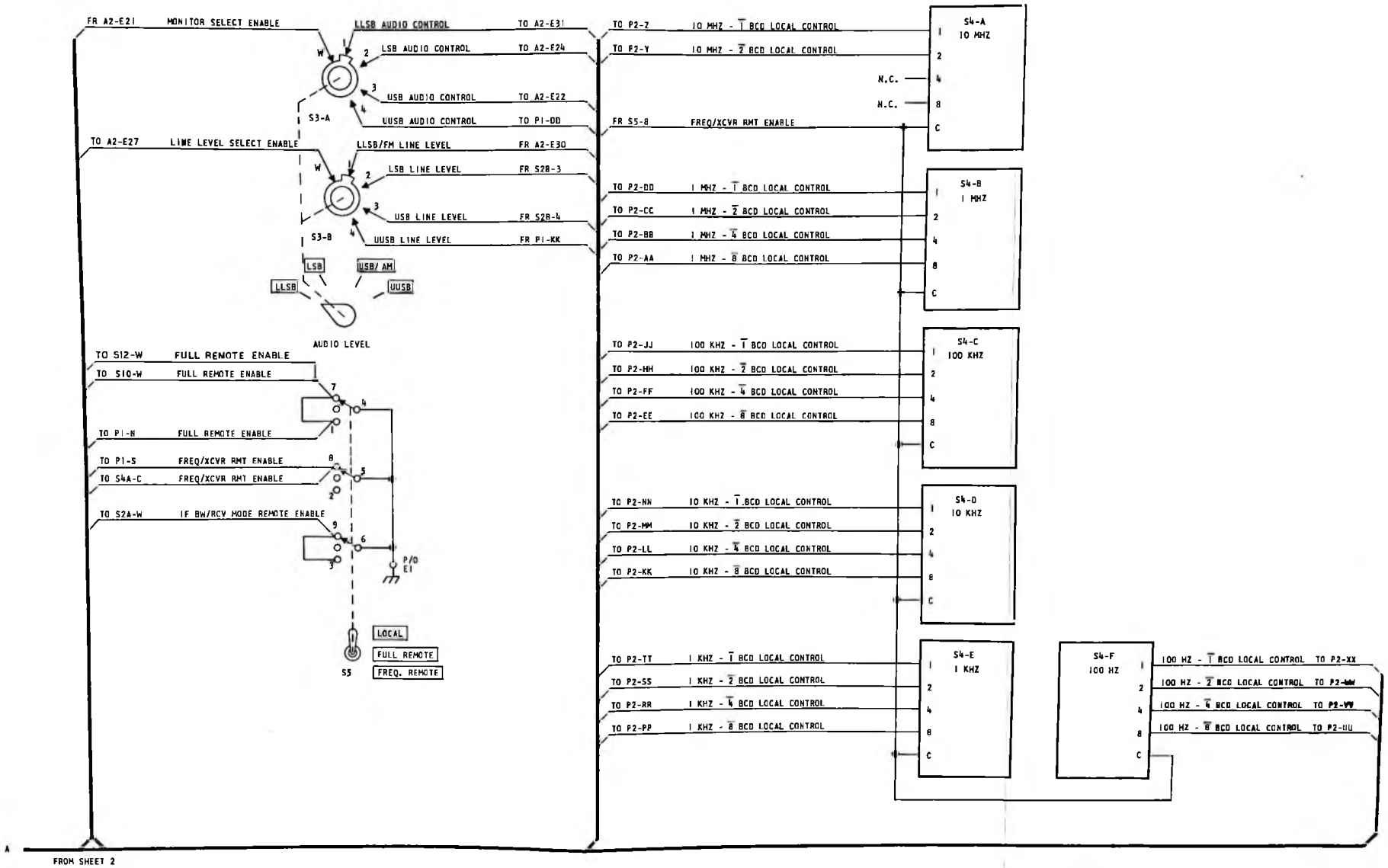

Figure 6-2. Front Panel Interconnection Diagram (Sheet 3 of 3)

NOTES:

1. Unless otherwise specified, all resistors are in ohms, $\frac{1}{4}$W, 10%, and all diodes are 1N3064.
2. Prefix all reference designations with A1A2.

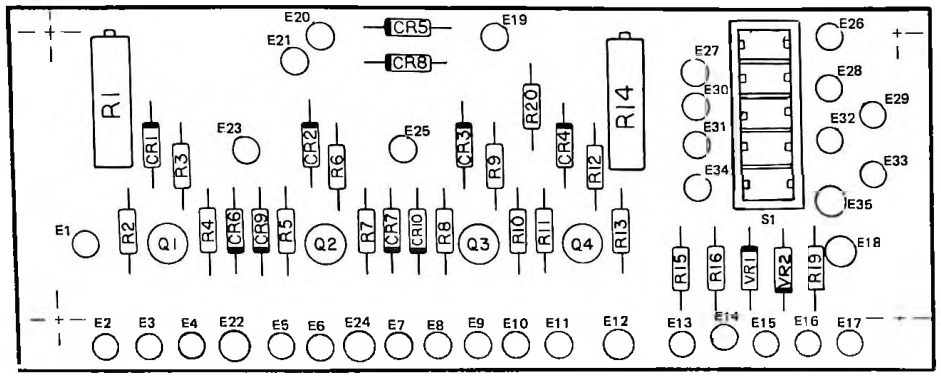

Figure 6-3. Meter Calibrate PWB, Component Locations

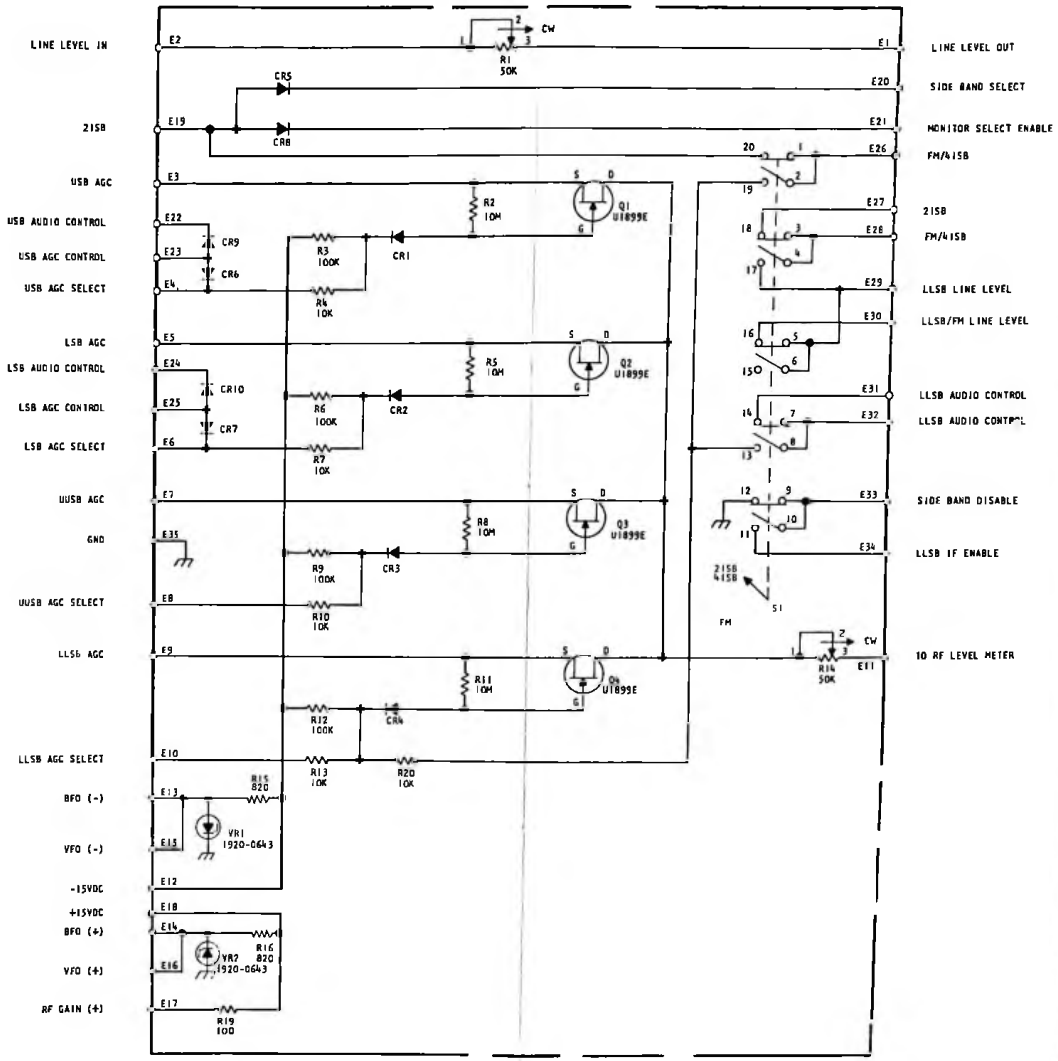

Figure 6-4. Meter Calibrate PWB Schematic Diagram

NOTES:

1. All resistors are in ohms, $\frac{1}{4}$W, 5%.
2. Prefix all reference designations with A1A1.

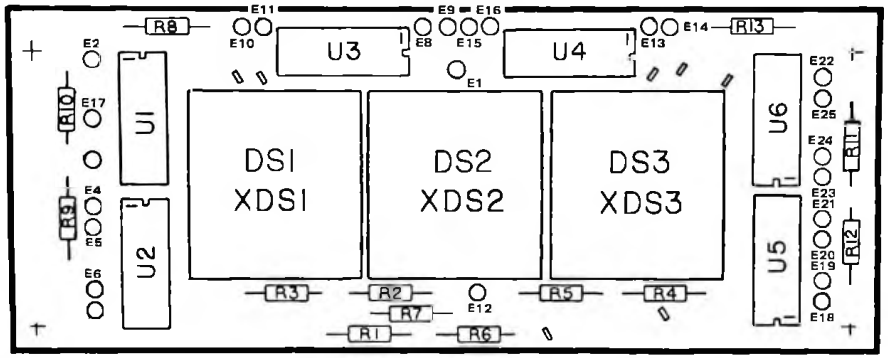

Figure 6-5. Display PWB Component Locations

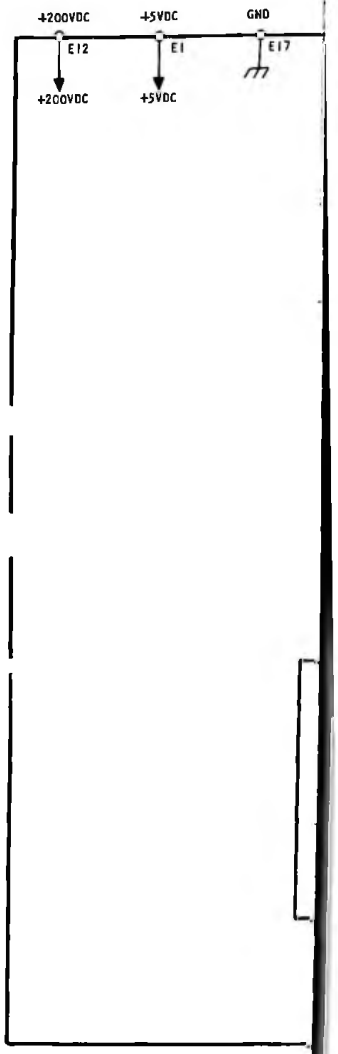

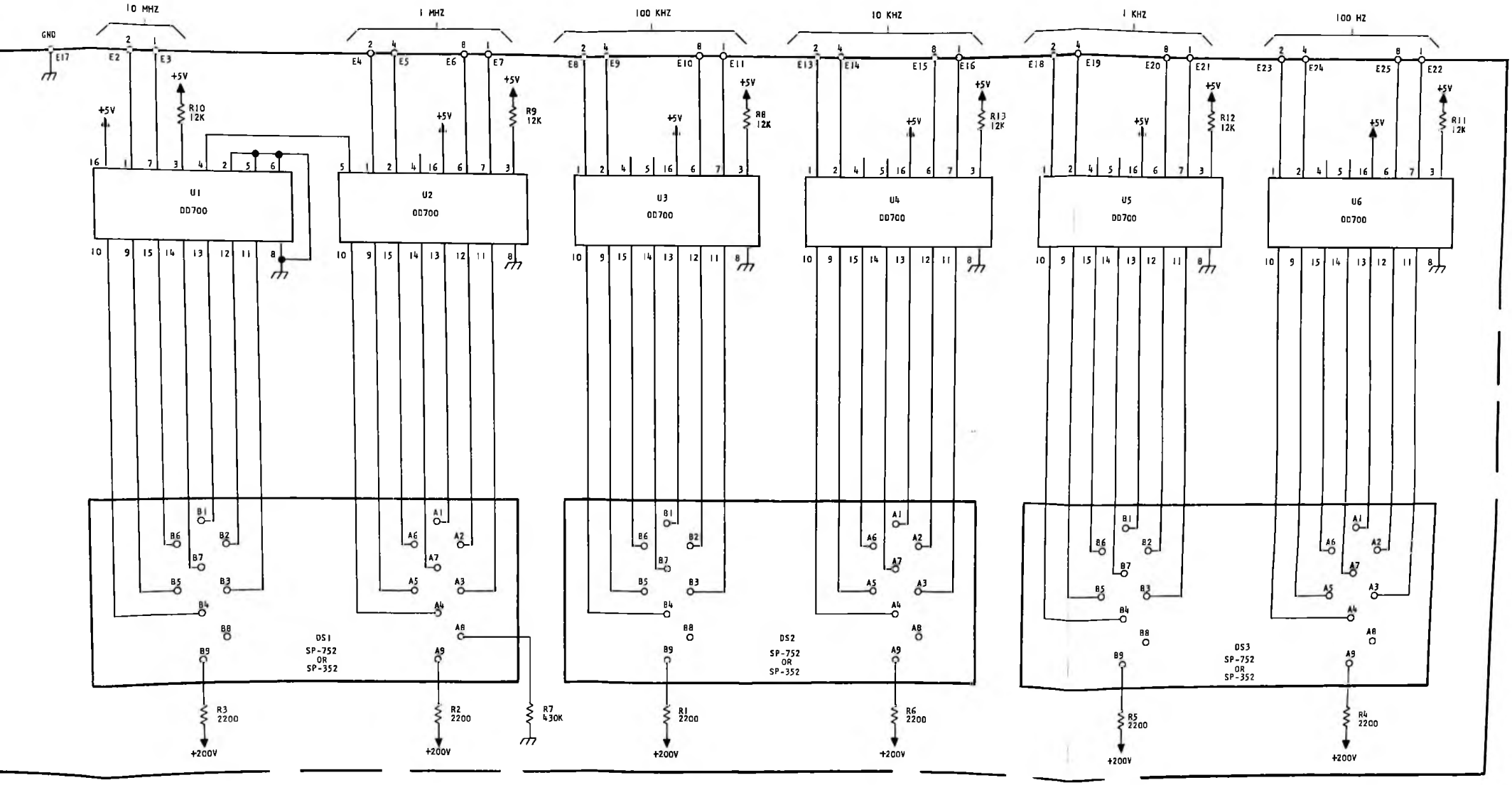

Figure 6-6. Display PWB Schematic Diagram

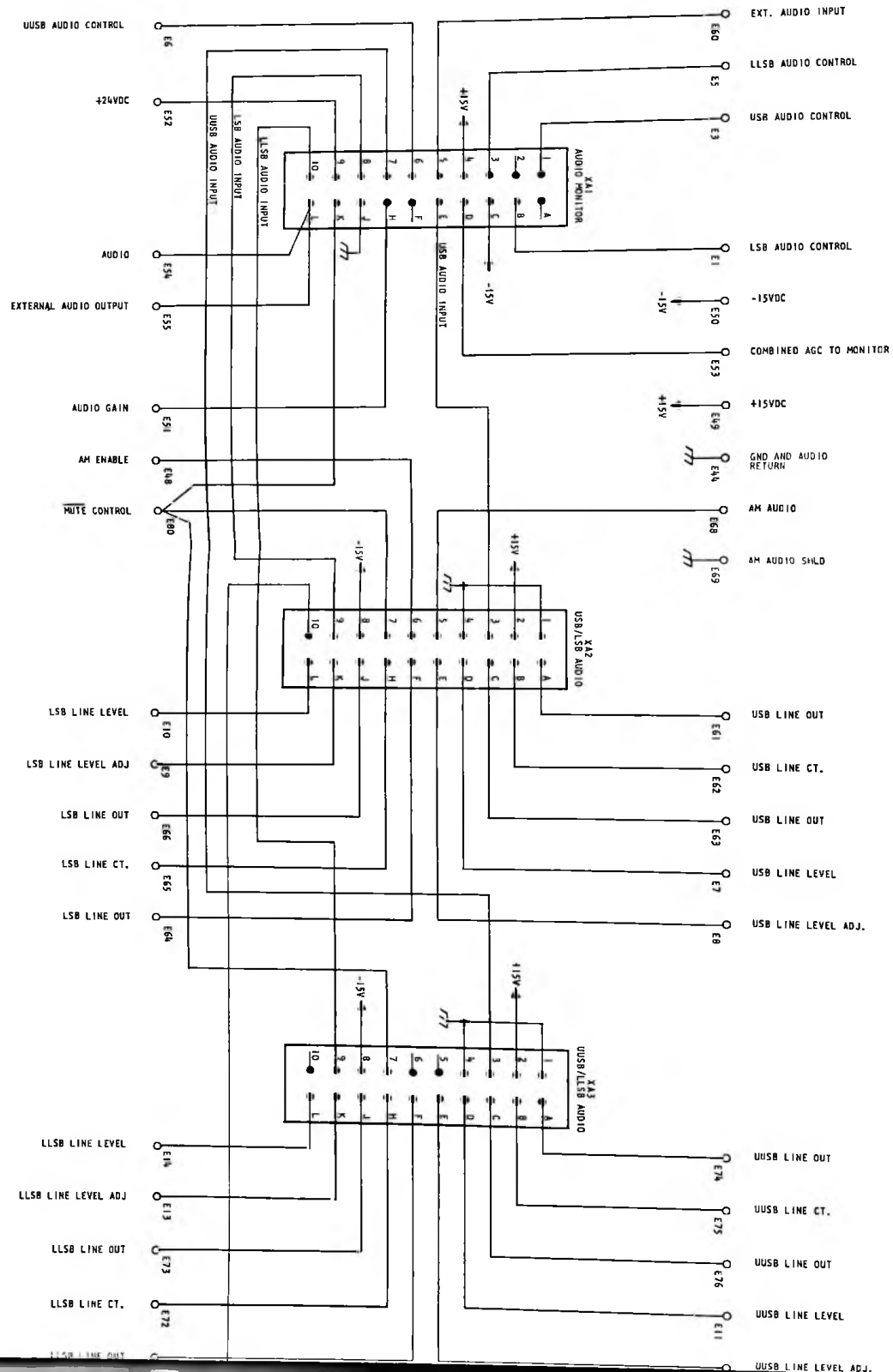
XA1
AUDIO MONITOR
XA2
USB/LSB AUDIO
XA3
UUSB/LLSB AUDIO
EXT. AUDIO INPUT
LLSB AUDIO CONTROL
USB AUDIO CONTROL
LSB AUDIO CONTROL
-15VDC
COMBINED AGC TO MONITOR
+15VDC
GND AND AUDIO RETURN
AM AUDIO
AM AUDIO SHLD
USB LINE OUT
USB LINE CT.
USB LINE OUT
USB LINE LEVEL
USB LINE LEVEL ADJ.
UUSB LINE OUT
UUSB LINE CT.
UUSB LINE OUT
UUSB LINE LEVEL
UUSB LINE LEVEL ADJ.
UUSB AUDIO CONTROL
+24VDC
AUDIO
EXTERNAL AUDIO OUTPUT
AUDIO GAIN
AM ENABLE
MUTE CONTROL
LSB LINE LEVEL
LSB LINE LEVEL ADJ
LSB LINE OUT
LSB LINE CT.
LSB LINE OUT
LLSB LINE LEVEL
LLSB LINE LEVEL ADJ
LLSB LINE OUT
LLSB LINE CT.
LLSB LINE OUT
UUSB AUDIO INPUT
LSB AUDIO INPUT
LLSB AUDIO INPUT
USB AUDIO INPUT
+15V
-15V

NOTE
1. Pref

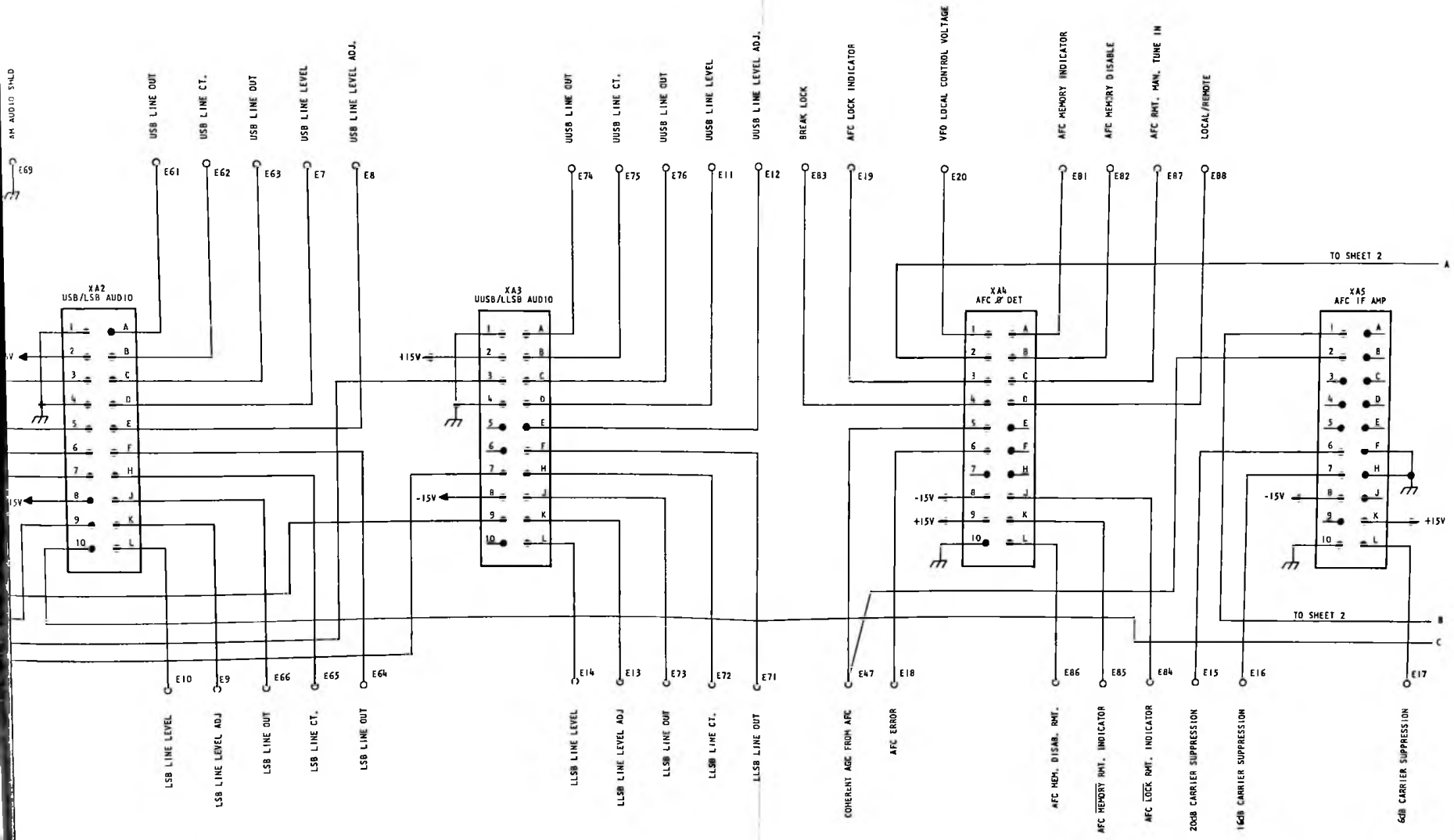

NOTE

1. Prefix all reference designations with A2A6A11.

Figure 6-7. Mother Board Schematic Diagram (Sheet 1 of 2)

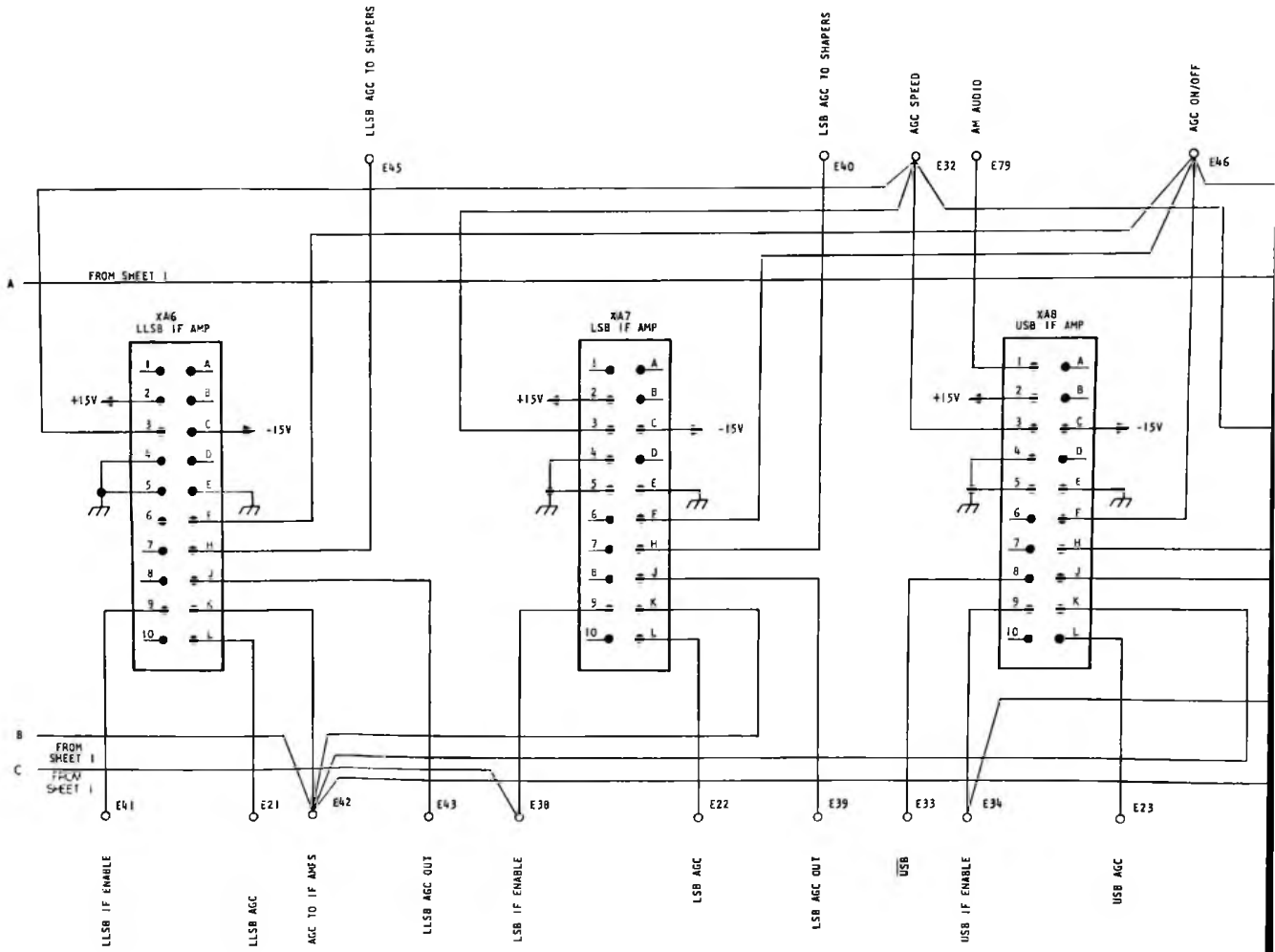
LLSB AGC TO SHAPERS
LSB AGC TO SHAPERS
AGC SPEED
AM AUDIO
AGC ON/OFF
E45
E40
E32
E79
E46
A
FROM SHEET 1
XA6
LLSB IF AMP
XA7
LSB IF AMP
XA8
USB IF AMP
+15V
-15V
B
C
FROM SHEET 1
FROM SHEET 1
E41
E21
E42
E43
E38
E22
E39
E33
E34
E23
LLSB IF ENABLE
LLSB AGC
AGC TO IF AMPS
LLSB AGC OUT
LSB IF ENABLE
LSB AGC
LSB AGC OUT
USB
USB IF ENABLE
USB AGC

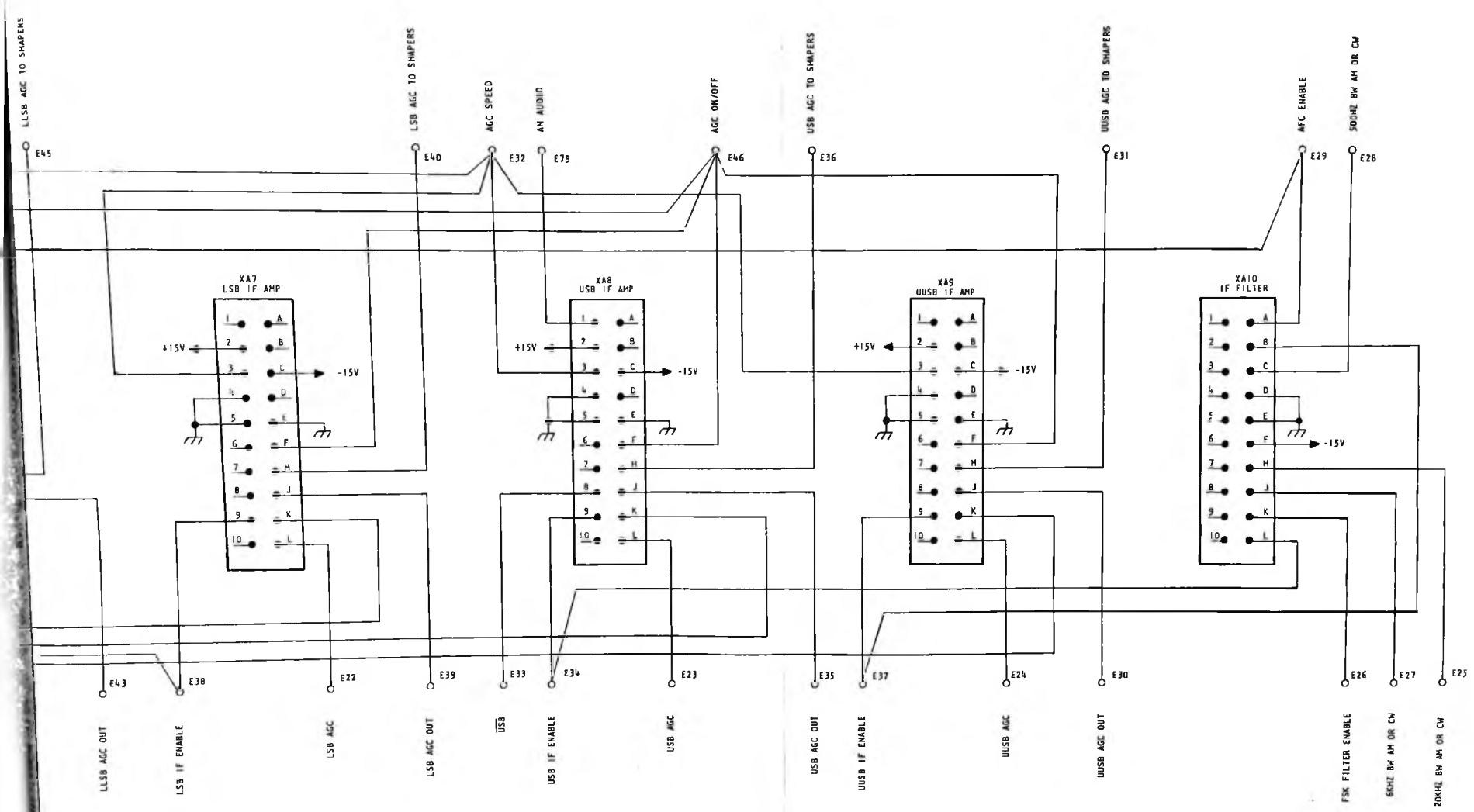

Figure 6-7. Mother Board Schematic Diagram (Sheet 2 of 2)

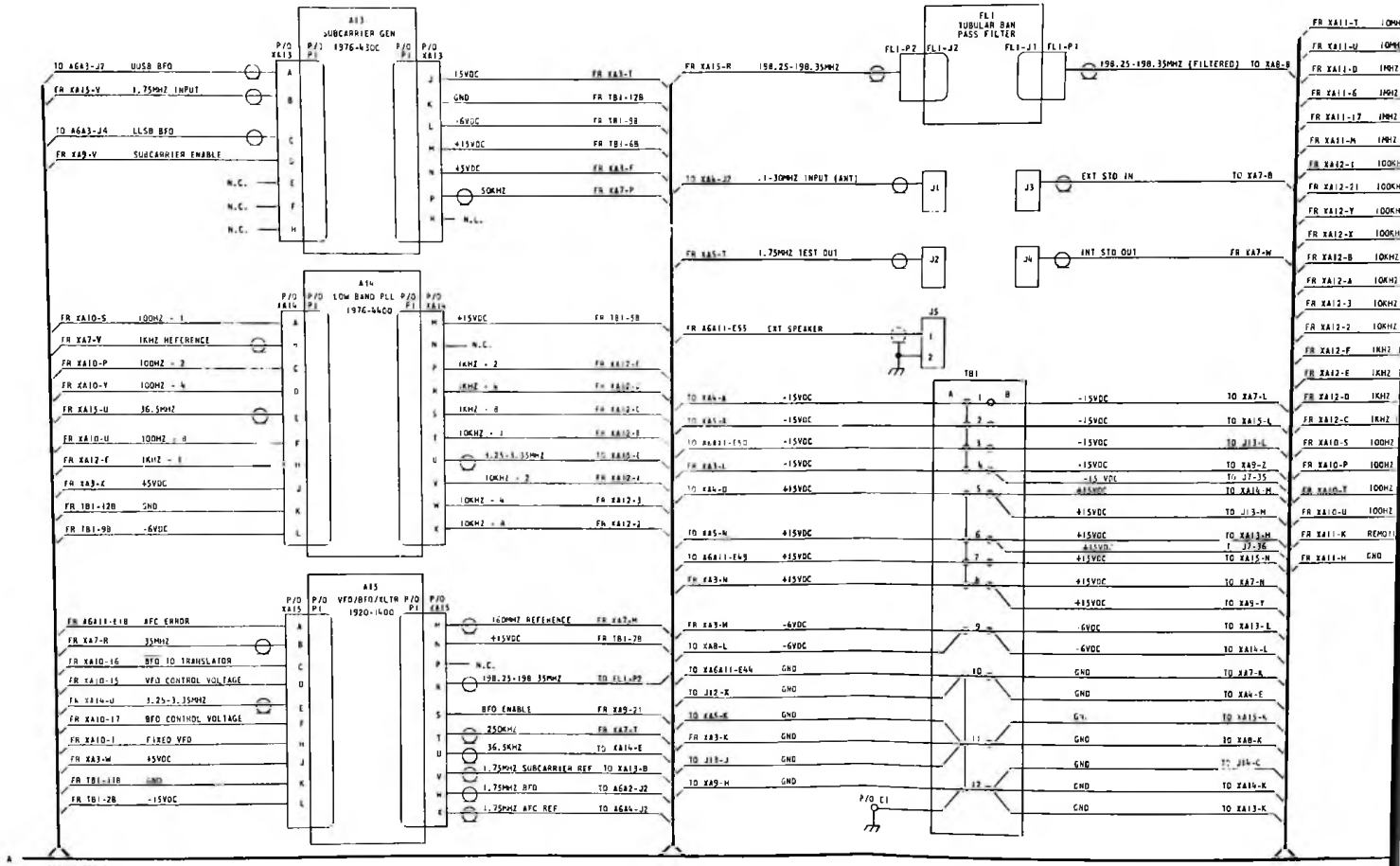
A13
SUBCARRIER GEN
1976-4300
P/O XA13
P/O P1
TO A6A3-J2 USB BFO
FR XA15-V 1.75MHZ INPUT
TO A6A3-J4 LSB BFO
FR XA9-V SUBCARRIER ENABLE
N.C.
15VDC
GND
-6VDC
+15VDC
45VDC
50KHZ
FR XA3-T
FR TB1-12B
FR TB1-9B
FR TB1-6B
FR XA3-F
FR XA7-P
A14
LOW BAND PLL
1976-4400
P/O XA14
FR XA10-S 100HZ - 1
FR XA7-V 1KHZ REFERENCE
FR XA10-P 100HZ - 2
FR XA10-Y 100HZ - 4
FR XA15-U 36.5MHZ
FR XA10-U 100HZ - 8
FR XA12-F 1KHZ - 1
FR XA3-K 45VDC
FR TB1-12B GND
FR TB1-9B -6VDC
+15VDC
1KHZ - 2
1KHZ - 4
1KHZ - 8
10KHZ - 1
3.25-3.35MHZ
10KHZ - 2
10KHZ - 4
10KHZ - 8
A15
VFO/BFO/ELTR
1920-1400
FR A6A11-E18 AFC ERROR
FR XA7-R 35MHZ
FR XA10-16 BFO TO TRANSLATOR
FR XA10-15 VFO CONTROL VOLTAGE
FR XA14-U 3.25-3.35MHZ
FR XA10-17 BFO CONTROL VOLTAGE
FR XA10-1 FIXED VFO
FR XA3-W 45VDC
FR TB1-11B GND
FR TB1-2B -15VDC
160MHZ REFERENCE
+15VDC
198.25-198.35MHZ
BFO ENABLE
250KHZ
36.5MHZ
1.75MHZ SUBCARRIER REF
1.75MHZ BFO
1.75MHZ AFC REF
FL1
TUBULAR BAN PASS FILTER
FL1-P2
FL1-J2
FL1-J1
FL1-P1
FR XA15-R 198.25-198.35MHZ
198.25-198.35MHZ (FILTERED) TO XA8-B
TO XA6-J2 .1-30MHZ INPUT (ANT)
J1
J3
EXT STD IN
TO XA7-B
FR XA5-T 1.75MHZ TEST OUT
J2
J4
INT STD OUT
FR XA7-W
J5
FR A6A11-E55 EXT SPEAKER
TB1
TO XA4-A -15VDC
TO XA5-B -15VDC
TO A6A11-E50 -15VDC
FR XA3-L -15VDC
TO XA4-D +15VDC
TO XA5-N +15VDC
TO A6A11-E49 +15VDC
FR XA3-N +15VDC
FR XA3-H -6VDC
TO XA8-L -6VDC
TO XA6A11-E44 GND
TO J12-K GND
TO XA5-E GND
FR XA3-K GND
TO J13-J GND
TO XA9-H GND
P/O C1
-15VDC
TO XA7-L
TO XA15-L
TO J13-L
TO XA9-Z
TO J7-35
TO XA15-M
TO J13-M
+15VDC
TO XA13-M
TO J7-36
TO XA15-N
TO XA7-N
TO XA9-Y
-6VDC
TO XA13-L
TO XA14-L
GND
TO XA7-R
TO XA4-E
TO XA15-R
TO XA8-K
TO J14-C
TO XA14-K
TO XA13-K
FR XA11-T 10MHZ
FR XA11-U 10MHZ
FR XA11-D 1MHZ
FR XA11-G 1MHZ
FR XA11-17 1MHZ
FR XA11-M 1MHZ
FR XA12-1 100KHZ
FR XA12-21 100KHZ
FR XA12-Y 100KHZ
FR XA12-X 100KHZ
FR XA12-B 10KHZ
FR XA12-A 10KHZ
FR XA12-3 10KHZ
FR XA12-2 10KHZ
FR XA12-F 1KHZ
FR XA12-E 1KHZ
FR XA12-D 1KHZ
FR XA12-C 1KHZ
FR XA10-S 100HZ
FR XA10-P 100HZ
FR XA10-T 100HZ
FR XA10-U 100HZ
FR XA11-K REMOTE
FR XA11-H GND
FROM SHEET 1

NOTES:

1. Prefix all reference designations with A2 except for A1P1, A1P2, and A1A1P1.
2. ◯ indicates chassis-grounded outer connector of coax.

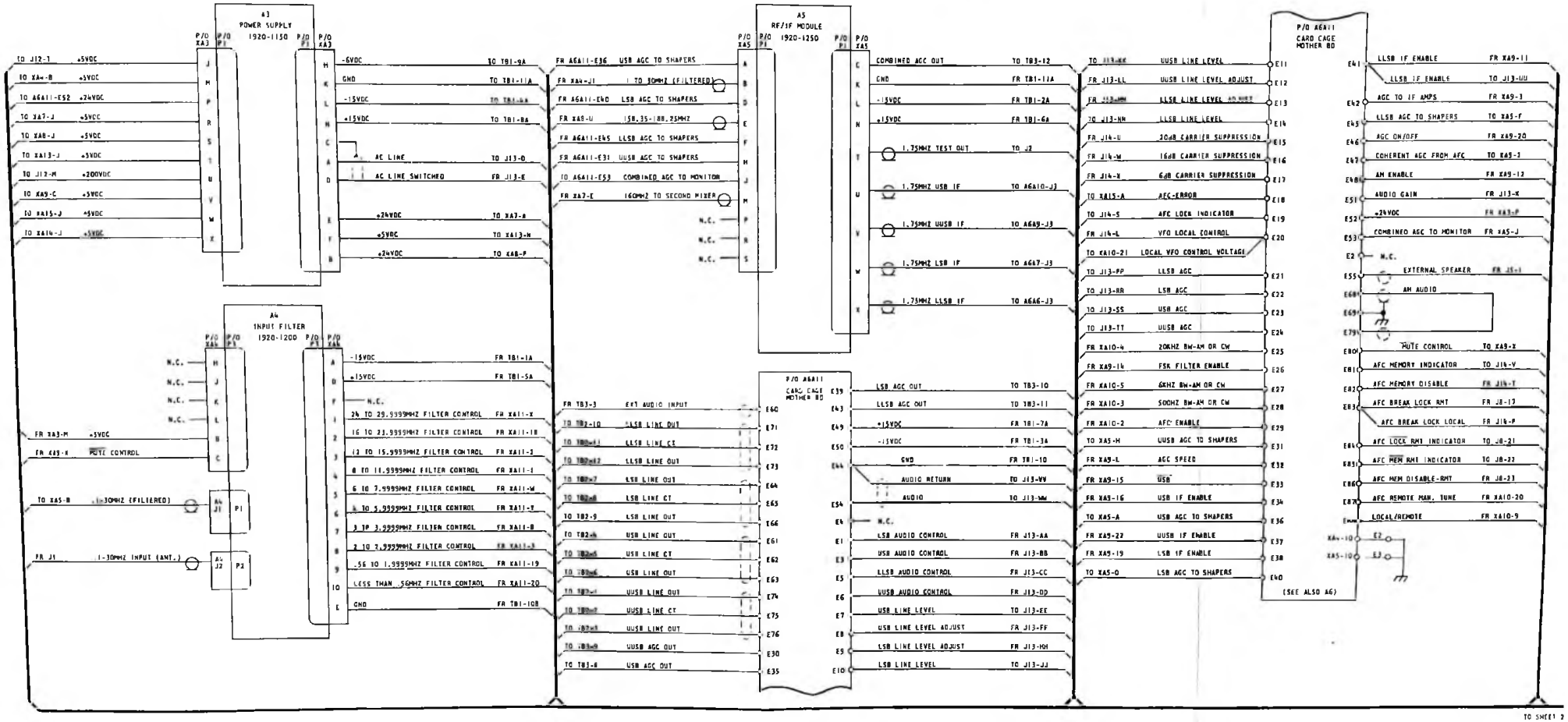

Figure 6-8. Chassis Interconnection Diagram (Sheet 1 of 5)

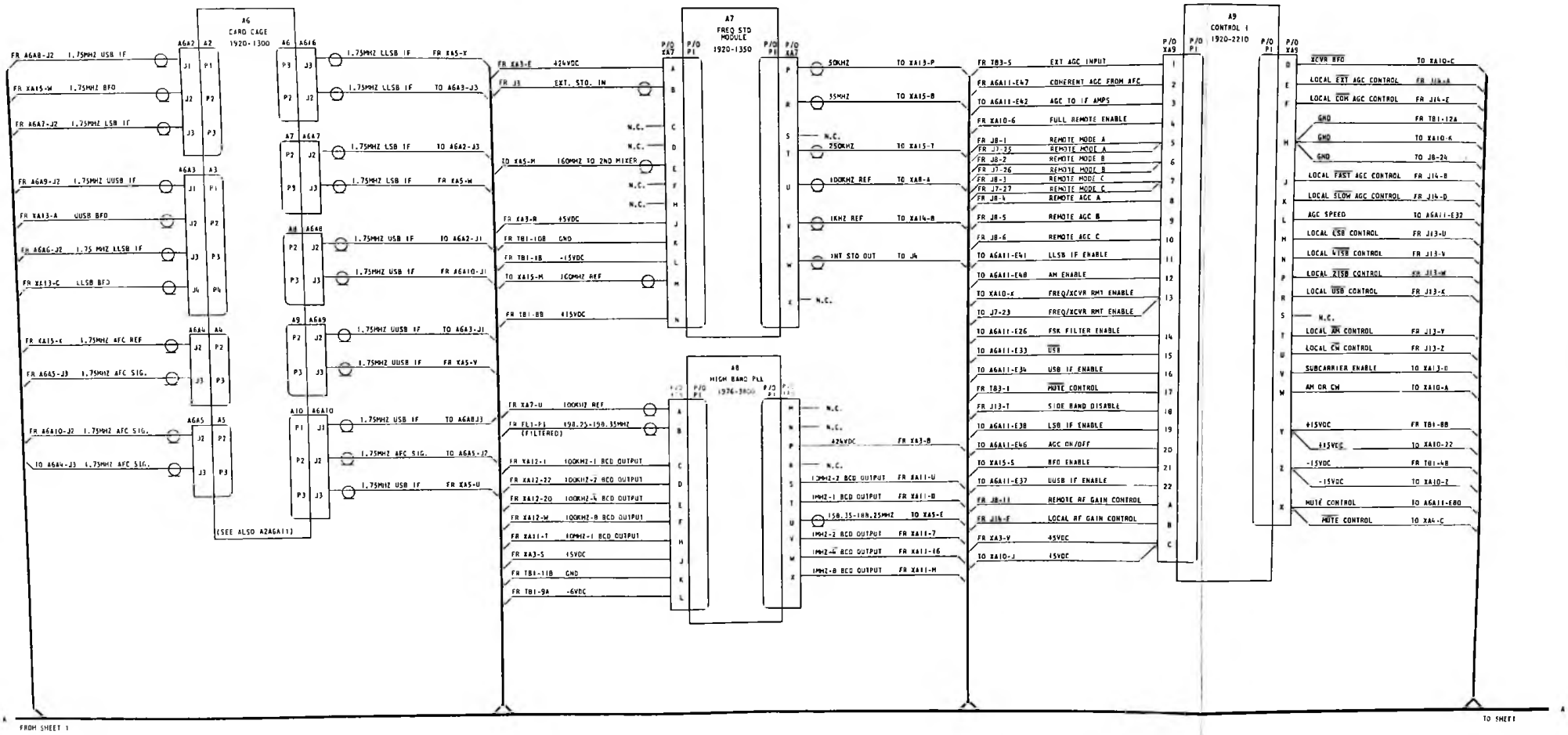

Figure 6-8. Chassis Interconnection Diagram (Sheet 2 of 5)

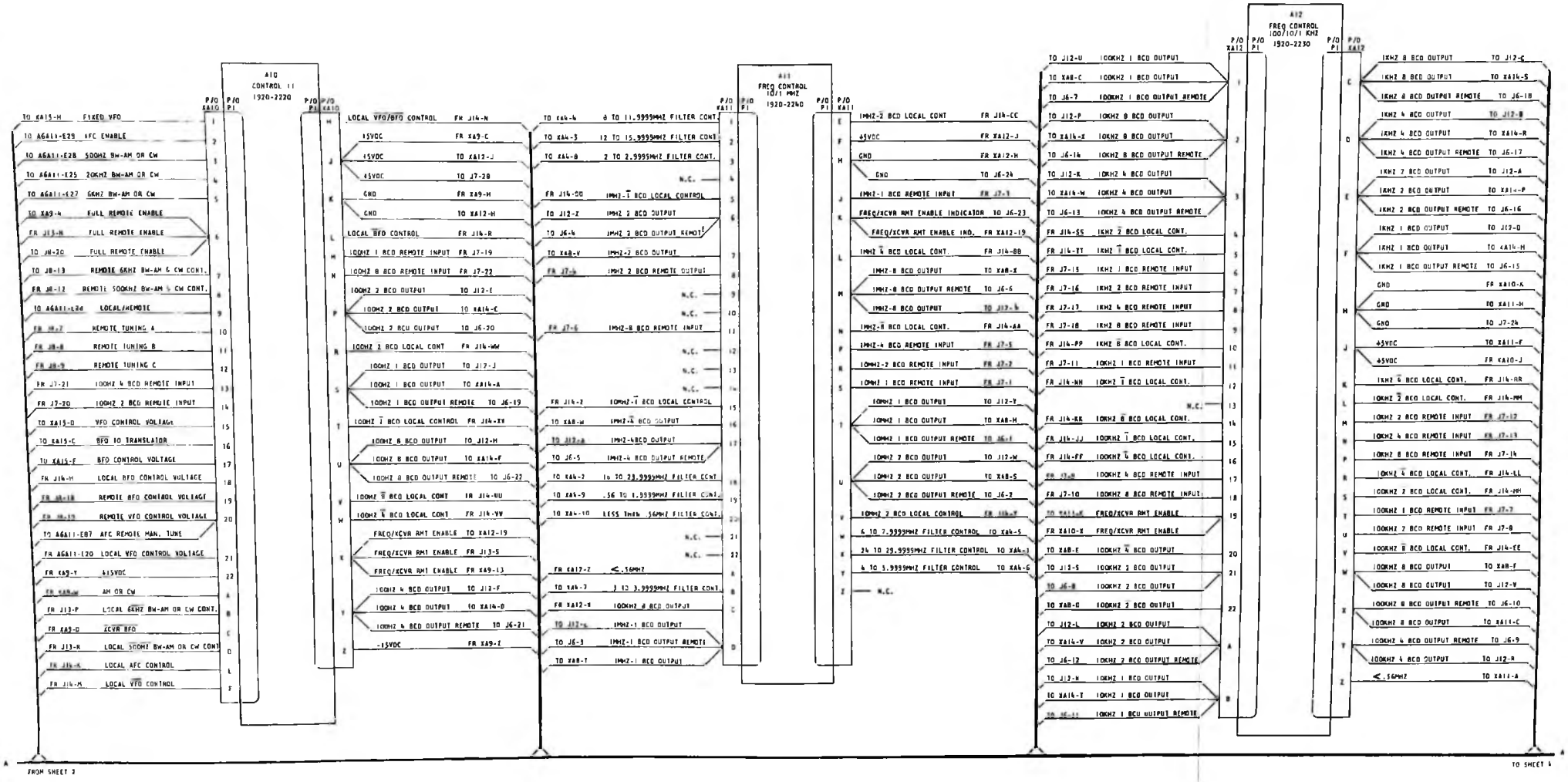

Figure 6-8. Chassis Interconnection Diagram (Sheet 3 of 5)

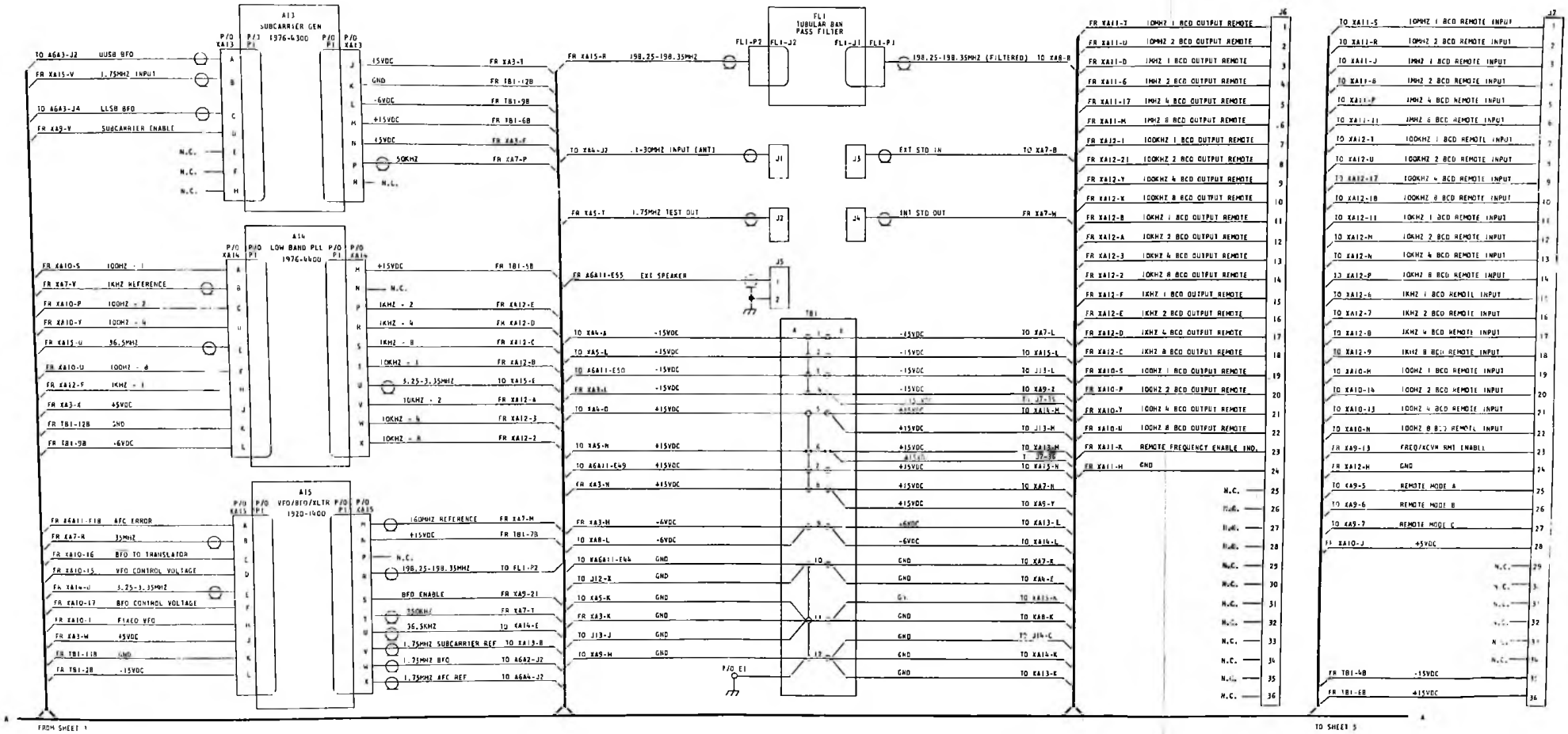

Figure 6-8. Chassis Interconnection Diagram (Sheet 4 of 5)

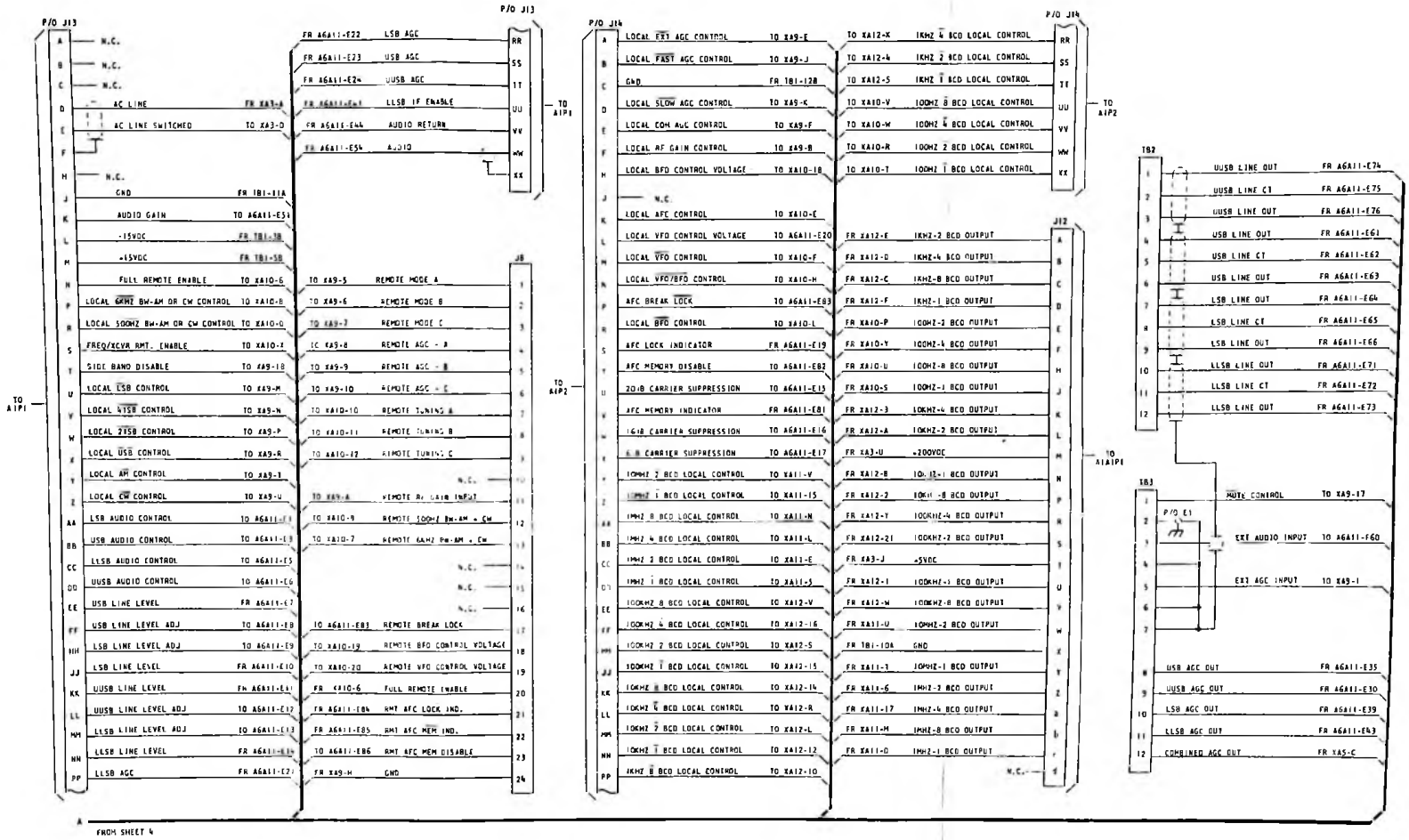

Figure 6-8. Chassis Interconnection Diagram (Sheet 5 of 5)

A2A3

UNIT INSTRUCTIONS

POWER SUPPLY ASSEMBLY

A2A3

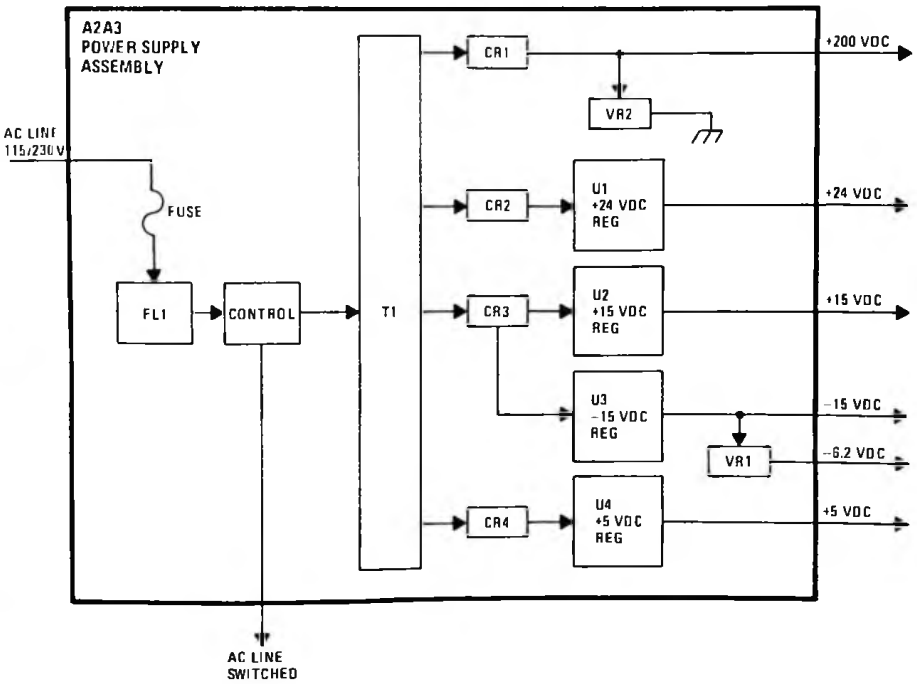

TABLE OF CONTENTS

A2A3

Paragraph		Page
1	General Description	1
2	Technical Characteristics	1
3	Semiconductor Complement	1
4	Circuit Description	2
5	Test Data	2
6	Parts List	3
7	Component Location and Schematic Diagrams	3
Table		
1	Range Switch Positions	2
2	A2A3 Power Supply Test Data	2
3	Parts List	4
4	Index of Manufacturers' Codes	6
Figure		
1	Power Supply Assembly	1
2	Rectifier Assembly, Component Locations	9
3	Heat Sink Assembly (Rear View)	9
4	Power Supply Assembly, Schematic Diagram	9

1. GENERAL DESCRIPTION

Assembly A2A3 operates from a primary power input of 115/230 Vac ±20%, 47 to 400 Hz. The dc outputs are +5V, -6V, -15V, +15V, +24V and +200V. The assembly consists of: Heatsink Assembly A1, Rectifier Assembly A2, and Power Transformer T1 (figure 1).

Heatsink Assembly A1, which is fastened to the RF-550 rear panel and power supply chassis, contains the following: Voltage Regulators, 115/230V switch S1, fuse F1, and input connector J9.

Rectifier Assembly A2 and Power Transformer T1 are mounted on a common chassis that plugs into the RF-550 main frame. The Rectifier Assembly provides the dc voltage outputs to the voltage regulators and contains the filter capacitors for the regulated dc voltage outputs. Range switch S1 is located on the bottom of the power supply assembly.

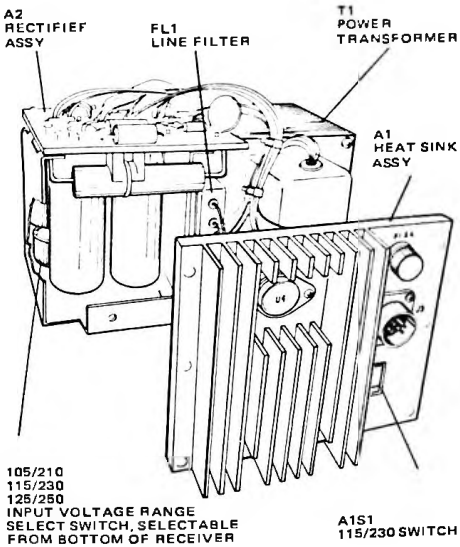

Figure 1. Power Supply Assembly

2. TECHNICAL CHARACTERISTICS

Weight: (with heatsink)
10 pounds (4.5 kilograms)

Dimensions:
5.35H x 7.87W x 5.24D (inches)
13.6H x 20W x 15.8D (cm)

Power Requirements:
115/230 Vac ± 20%, 47 to 400 Hz

DC Supply Voltages and Regulator Types:

+ 24 Vdc	UA7824
+ 15 Vdc	UA7815
− 15 Vdc	MC7915
-6.2 Vdc	1N4735
+ 5 Vdc	LM323
+200 Vdc	V130LA20B

Output Voltages (Vdc)

No Load:	Full Load:
24.3	24.3
14.90	14.87
−15.16	−15.33
- 6.2	- 6.2
5.11	5.10
200	180

Maximum Load Currents:

+24 Vdc	0.9A
+15 Vdc	1.25A
-15 Vdc	1.25A
+ 5 Vdc	2A

3. SEMICONDUCTOR COMPLEMENT

REF. DESIG.	TYPE	DESCRIPTION
A2A3A1		
U1	UA7824UC	+24V Reg.
U2	UA7815UC	+15V Reg.
U3	MC7915P	-15V Reg.
U4	LM323K	+5V Reg.
A2A3A2		
CR1	1N2071	+200V Rect.
CR2	VJ-148	+24V Rect. Bridge
CR3	VJ-148	+15/-15 Vdc Rect. Bridge
CR4	VJ-148	+5 Vdc Rect. Bridge
VR1	1N4735	-6 Vdc Zener
VR2	V130LA20B	+200 Vdc Zener

4. CIRCUIT DESCRIPTION (Figure 4)

Power Supply Assembly A2A3 converts 115/230 Vac to dc voltages required for operation of Receiver RF-550. Primary power is applied through fuse F1, line filter FL1, front panel ON/OFF switch S9 (not shown in figure 4), input voltage switch A1S1, and voltage range switch S1 to power transformer T1. Prior to operating the equipment, the proper fuse is chosen for F1 (2 amperes if 115 Vac primary power is used, 1 ampere if 230 Vac is used), switch A1S1 is set to correspond to the primary power available, and switch S1 is set for the measured ac line voltage range. Correct setting of S1 (table 1) assures minimum power dissipation in the power supply regulators.

TABLE 1. RANGE SWITCH POSITIONS

NOMINAL AC LINE VOLTAGE ±10%	SWITCH POSITIONS
105V/210V	105/210 (fully ccw)
115V/230V	115/230 (mid-position)
125V/250V	125/250 (fully cw)

From Line Filter FL1, the 115/230 Vac line voltage is applied, via P1-A, to the RF-550 ON/OFF switch on the front panel. From the ON/OFF switch, the ac voltage is applied via P1-D (AC LINE SWITCHED), A1S1, and S1 to the primary side of Power Transformer T1.

Four separate dc supplies are connected to secondary windings of T1. VR2, R7, and CR1 form a varistor regulator that maintains a 200 ±10% Vdc output through P1-U to the RF-550 front panel displays. Full-wave bridge rectifier CR2 and voltage regulator U1 supply +24 Vdc to the RF-550 through P1-P, B, and E. CR3 and voltage regulators U2 and U3 supply +15 Vdc and -15 Vdc to the RF-550 through P1-N and L, respectively. -15 Vdc is also applied to zener diode VR1, which supplies -6 Vdc at P1-H. CR4 and voltage regulator U4 supply +5 Vdc to the RF-550 through P1-F, J, M, R, S, T, V, W, and X. The -6 Vdc, -15 Vdc, and +15 Vdc outputs are distributed from TB1 on the underside of the RF-550 chassis. The +5 Vdc and +24 Vdc outputs are distributed directly from plug P1. The ac line switched voltage and +200 Vdc outputs are wired directly to the RF-550 front panel through P1.

5. TEST DATA

There are no adjustments on the RF-550 power supply assembly. Make the voltage measurements shown in table 2 to verify power supply performance.

NOTE

Make the table 2 measurements with an ac line voltage of 115 Vac. Set switch A1S1 at the 115 Vac position and switch S1 in the 115/230 Vac range. Refer to figure 4 for test point locations.

TABLE 2. A2A3 POWER SUPPLY TEST DATA

SUPPLY	TEST POINT	REGULATOR INPUT VDC	TEST POINT	REGULATOR OUTPUT VDC	RIPPLE PEAK-TO-PEAK (MAX.)
+200 Vdc	----------	----------	A2A3A2-E2	180 ±10 Vdc (1)	----------
+ 24 Vdc	A2A3A2-E5	36 ± 3 Vdc	A2A3A2-E6	24 ± 1 Vdc	10 mV
+ 15 Vdc	A2A3A2-E11	23 ± 2.5 Vdc	A2A3A2-E12	15 ± 0.6 Vdc	10 mV
+ 5 Vdc	A2A3A2-E19	16 ± 1 Vdc	A2A3A2-E20	5 ± 0.2 Vdc	10 mV
- 15 Vdc	A2A3A2-E14	-23 ± 2.5 Vdc	A2A3A2-E16	-15 ± 0.6 Vdc	10 mV
- 6 Vdc	----------	----------	A2A3A2-E15	-6.2 ± 0.4 Vdc	5 mV

(1) Frequency display set at 28.8888.

6. PARTS LIST

Table 3 is a list of power supply assembly replaceable parts, including manufacturer identification numbers. Table 4 lists manufacturer's names and addresses.

7. COMPONENT LOCATION AND SCHEMATIC DIAGRAMS

Component location diagrams and the schematic diagram for Assembly A2A3 are contained in Figures 2 through 4.

NOTICE

In some instances, the Integrated Circuit (IC) component types listed herein differ from those of the actual component. These components are physically and electronically interchangeable. Either type can be used for replacement purposes.

TABLE 3. PARTS LIST

REF DESIG	NOTES	NAME AND DESCRIPTION	FIG NO
A2A3		Power Supply Assembly: MFR 14304, PN 1920-1150	
FL1		Line Filter: MFR 05245, PN F-1906	
MP1 to MP19		Connector Pin, Female: MIL Type MS17804-16-20	
P1		Connector, Rectangular, 20 Pin: MFR 81312, PN MRAC20SJ	
S1		Switch, Rotary: MFR 81073, PN 4444-262-55-2-3N	
T1		Transformer, Power: MFR 14304, PN 1920-0616	
A2A3A1		Heatsink Assembly: MFR 14304, PN 1920-1160	
F1		Fuse, Cartridge, 250V, 2 Amp: MFR 71400, PN AGC-2	
J1 to J8		Not Used	
J9		Connector, AC Line: MFR 14304, PN 724-0146	
S1		Switch, Slide: MFR 82389, PN 46256LFR	
U1		Integrated Circuit: MFR 07263 PN UA7824UC	
U2		Integrated Circuit: MFR 07263, PN UA7815UC	
U3		Integrated Circuit: MFR 04713, PN 7915CT	

REF DESIG	NOTES	NAME AND DESCRIPTION	FIG NO.
U4		Integrated Circuit: MFR 12040, PN LM323K	
XF1		Fuseholder: MFR 71400, PN HKP	
A2A3A2		Rectifier PWB Assembly: MFR 14304, PN 1920-2160	
C1		Capacitor, Fixed, Electrolytic, 50 µF, 300V: MFR 53021, PN 066GP500T3003	
C2 to C4		Capacitor, Fixed, Electrolytic, 2600 µF, +75% - 10%, 50V: MFR 56289, PN 36D262G050AB2B	
C5		Capacitor, Fixed, Electrolytic, 6500 µF, +100% -10%, 15V: MFR 53021, PN 500-1927-01	
C6 to C9		Capacitor, Fixed, Tantalum, 100 µF, ±20%, 30V: MFR 05397, PN T140D107M030AS	
C10		Capacitor, Fixed, Tantalum, 1 µF, ±20%, 20V: MFR 12954, PN D1R0GSA20M	
CR1		Diode: Type 1N2071	
CR2, CR3		Rectifier Bridge: MFR 27777, PN VJ-148	
CR4		Rectifier Bridge: MFR 27777, PN VJ-148	
R1		Resistor, Fixed, Composition, 47K, ±10%, 1W: MIL Type RCR32G473KM	

TABLE 3. PARTS LIST (Cont)

REF DESIG	NOTES	NAME AND DESCRIPTION	FIG. NO.
R2		Resistor, Fixed, Composition, 3.9K, ±10%, 1W: MIL Type, RCR32G392KM	
R3, R4		Resistor, Fixed, Composition, 2.2K, ±10%, 1W: MIL Type, RCR32G222KM	
R5		Resistor, Fixed, Composition, 560 ohms, ±10%, 1W: MIL Type RCR32GJ561KM	
R6		Resistor, Fixed, Composition, 820 ohms, +10%, 2W Fuseable, MFR BWF-820-5%	
R7		Resistor, Fixed, Composition, 150 ohms, ±10%, 1W: MIL Type RCR32G151KM	
VR1		Diode, Zener, 6.2V: MIL Type 1N4735	
VR2		Varistor, 200V, ±13%: MFR 03508, PN V130LA20B	

TABLE 4. INDEX OF MANUFACTURERS' CODES

MFR CODE	MFR NAME AND ADDRESS
03508	General Electric Company Semi-Conductor Products Dept. Electronics Park Syracuse, New York 13201
04713	Motorola, Inc. Semiconductor Products Div. 5005 East Mc Dowell Road Phoenix, Arizona 85036
05245	Components Corporation Chicago, Illinois
05397	Union Carbide Corporation Materials Systems Division 11901 Madison Avenue Cleveland, Ohio 44101
07263	Fairchild Semiconductor a Division of Fairchild Camera and Instrument Corp. 464 Ellis Street Mountain View, California 94042
12040	National Semiconductor Corporation P.O. Box 443 Commerce Drive Danbury, Connecticut 06810
12954	Dickson Electronics Corporation 8700 East Thomas Road P.O. Box 1390 Scottsdale, Arizona 85352
14304	Harris Corporation, RF Communications Division 1680 University Avenue Rochester, New York 14610
27777	Varo Electron Devices, Inc. P.O. Box 1437 2203 Walnut Street Garland, Texas 75040

TABLE 4. INDEX OF MANUFACTURERS' CODES (Cont)

MFR CODE	MFR NAME AND ADDRESS
53021	Sangamo Electric Company P.O. Box 3347 1301 North 11th Springfield, Illinois 62708
56289	Sprague Electric Company North Adams, Massachusetts 01247
71400	Bussman Mfg. Division McGraw - Edison Company 2536 West University Street St. Louis, Missouri 63107
81073	Grayhill, Inc. P.O. Box 373 561 Hillgrove Avenue La Grange, Illinois 60525
81312	Winchester Electronics Division Litton Industries, Inc. Main Street and Hillside Avenue Oakville, Connecticut 06779
82389	Switchcraft, Inc. 5555 North Elston Avenue Chicago, Illinois 60630
75042	TRW Electronics Inc. Fixed Resistor, Boone Division Greenway Road Boone, N.C. 28607

NOTES:

1. Dashed lines show components on under-side.

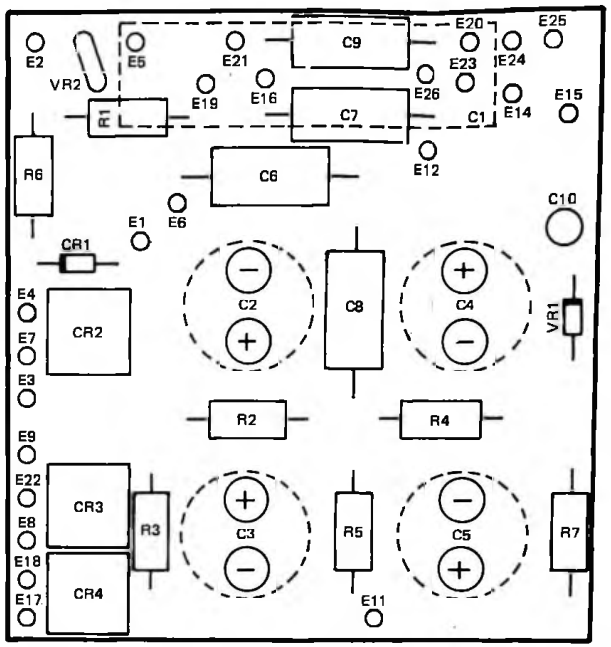

Figure 2. Rectifier Assembly, Component Locations

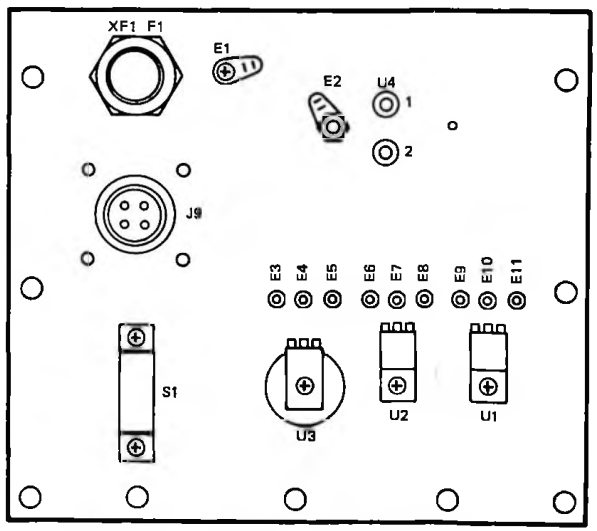

Figure 3. Heat Sink Assembly (Rear View)

NOTES:

1. Prefix all reference designator
2. Unless otherwise specified:
   A. All resistors are in ohms, $\frac{1}{4}$
   B. All capacitors are in micro

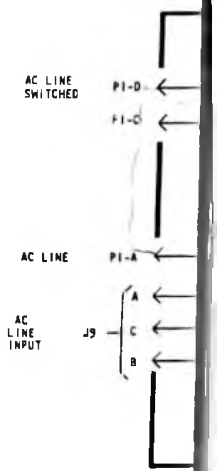

s with A2A3.

W, ±10%.
arads.

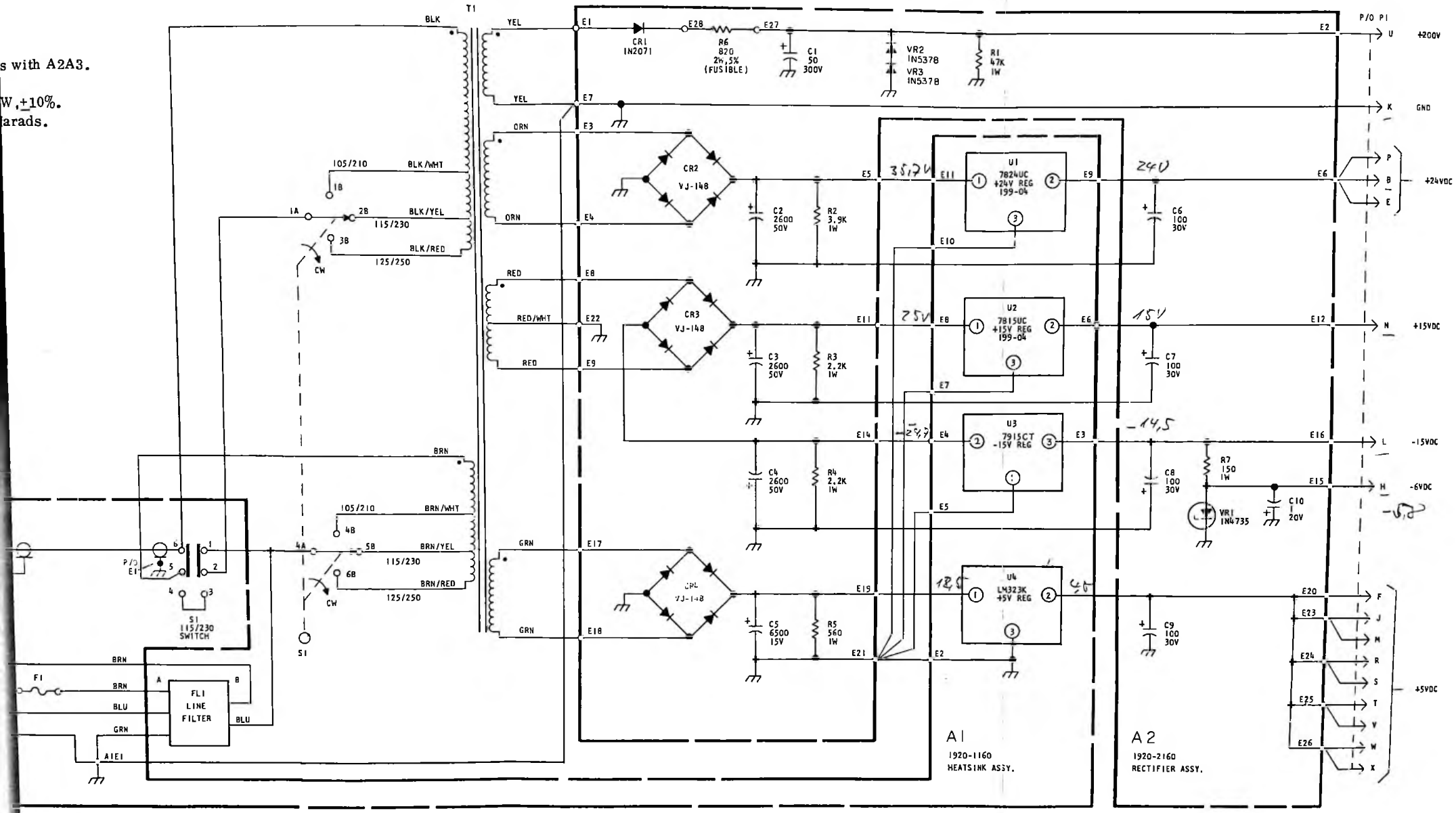

Figure 4. Power Supply Assembly, Schematic Diagram

A2A4

UNIT INSTRUCTIONS

INPUT FILTER ASSEMBLY

A2A4

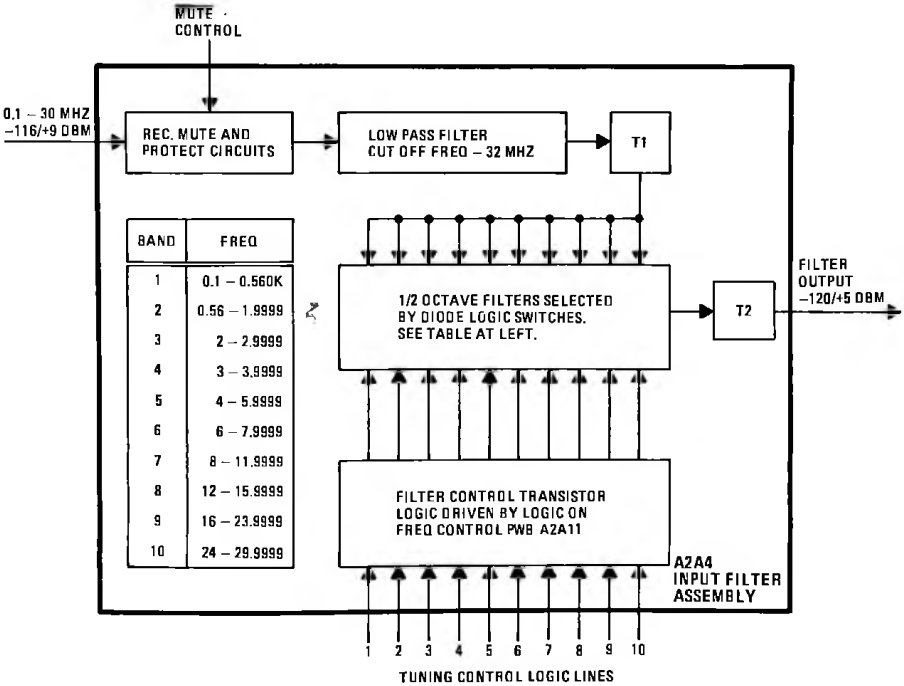

TABLE OF CONTENTS

A2A4

Paragraph		Page
1	General Description	1
2	Technical Characteristics	1
3	Semiconductor Complement	1
4	Circuit Description	1
4.1	Input Filter Control PWB Assembly A2A4A2	1
4.2	1/2 Octave Filter PWB Assembly A2A4A1	2
5	Maintenance	2
5.1	Assembly A2A4 Checkout Procedure	2
5.2	Assembly A2A4 Alignment Procedure	3
6	Parts List	6
7	Component Location and Schematic Diagrams	6
Table		
1	Filter Band Data	5
2	Parts List	7
3	Index of Manufacturers' Codes	21
Figure		
1	Typical A2A4 Output Characteristic Curve	1
2	Test Setup for Assembly A2A4	3
3	Alignment Test Setup for Assembly A2A4	3
4	35 MHz LP Filter Adjustment	4
5	0.58 MHz LP Filter Adjustment	4
6	Inductor Location Diagram	4
7	Inductor/Bandpass Relationships	4
8	Input Filter Control PWB Assembly, Component Locations	23
9	Input Filter Control PWB Assembly, Schematic Diagram	23
10	1/2 Octave Filter PWB Assembly, Component Locations	25
11	1/2 Octave Filter PWB Assembly, Schematic Diagram	25

1. GENERAL DESCRIPTION

Input Filter Assembly A2A4 performs receiver muting, low pass filtering, and initial frequency selection functions. Assembly A2A4 comprises two pw boards containing the circuits shown in the block diagram on the cover sheet for this section. PWB Assembly A2A4A1 contains ten 1/2 octave filter elements and transformers T1 and T2. PWB Assembly A2A4A2 contains the input filter control elements, the protection and muting circuits, and the low pass filter. The RF input signal passes through the input protection and muting circuit and the low pass filter to the selected 1/2 octave filter. Diode switching selects the appropriate filter in response to control logic signals from Frequency Control PWB Assembly A2A11. Figure 1 shows a typical Input Filter characteristic curve. The insertion loss for in-band signals is typically 3 dB; rejection for out-of-band signals increases sharply to over 60 dB.

2. TECHNICAL CHARACTERISTICS

Weight:
1 pound 9 ounces (703 grams)

Dimensions:
5.3H x 5.78W x 1.88D (inches)
13.4H x 14.68W x 4.77D (cm)

Power Requirements:
+5 Vdc
+15 Vdc
-15 Vdc

Signal Inputs:
0.1 - 30 MHz, -116/+9 dBm

Signal Outputs:
-120/+5 dBm, selected bandwidth

Control Inputs:
Ten band-selection inputs: +5V = on, 0V = off
MUTE: -15V active, 0V inactive

3. SEMICONDUCTOR COMPLEMENT

REF. DESIG.	TYPE	DESCRIPTION
A2A4A1		
CR1 thru CR40	HPA3168/ 1N3064	Input and output filter switching diodes
A2A4A2		
CR1	1N3611	Diode, general purpose
CR2	1N4148	Diode, general purpose
CR3	1N3064	Diode, general purpose
Q1, Q3, Q5...Q21	2N2222	Transistor, NPN
Q2, Q4, Q6...Q22	2N2907	Transistor, PNP

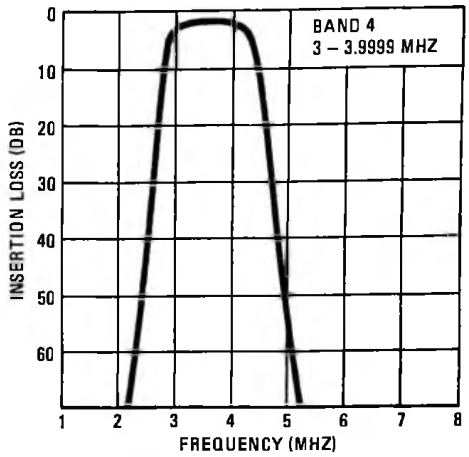

Figure 1. Typical A2A4 Output Characteristic Curve

4. CIRCUIT DESCRIPTION

The Input Filter Assembly comprises the two pw board assemblies shown schematically in figures 9 and 11. RF input signals enter the receiver at J1 on the rear of the RF-550 and are routed via a 50 ohm coaxial cable to P2 on the Input Filter Assembly. (See figure 6-8, sheet 1 of 5, in the General Information Section.)

4.1 INPUT FILTER CONTROL PWB ASSEMBLY A2A4A2

The Input Filter Control PWB Assembly performs four distinct functions: muting control, input protection, low pass filtering, and band pass filter control. The band selection in-

puts shown at the top of figure 9 originate on Frequency Control PWB Assembly A2A11. The inputs are in the form of standard 0V or +5V logic levels, with +5V representing the ON condition. The logic levels control selection of the desired filter through the pair of transistors associated with each line. The emitters of the even numbered transistors, Q2 through Q20, are connected to +5V, and the collectors are connected through resistors to -15V. When band 1 is selected, +5V is present at pin 10, turning on both Q1 and Q2. With Q2 on, +5V (minus the drop through Q2) is present at the Band 1 output to the filter selection logic. The +5V signal forward biases CR1 and CR3 on the filter board (figure 9) to select the band 1 (less than 0.56 MHz) filter. All filter sections other than the selected one are biased off by the -15V that is present on the control lines when the associated transistors are switched off.

Receiver muting and front end protection are accomplished by opening the antenna circuit and grounding the input to the receiver. Q21 controls muting relay K1 by completing the path through its control winding to ground when Q21 is on. In absence of the MUTE signal, Q21 is on whenever the RF-550 is powered as a result of the bias developed by the divider consisting of R54 and R53. Q21 is turned off when the -15V mute signal is present at pin C, or when the RF signal exceeds approximately 10V. RF signals greater than 10V cause the voltage developed across the divider, consisting of R55 and R51 and detected by CR2, to become sufficiently negative to bias off Q21. Component values have been selected so that signal voltages greater than 10V at the input will turn off Q21 and protect the receiver against excessive RF input levels.

4.2 1/2 OCTAVE FILTER PWB ASSEMBLY A2A4A1

The 1/2 Octave Filter PWB Assembly consists of 10 separate elliptical bandpass filters. The appropriate filter is automatically selected as previously described in response to frequency selection logic levels present at Frequency Control PWB Assembly A2A11. Each filter has a bandpass characteristic similar to that shown for band 4 in figure 1 and a relatively uniform 3 to 4 dB insertion loss throughout the desired passband. Rejection characteristics fall off steeply to over 60 dB for out-of-band signals. T1 and T2 function as 50-ohm input and output matching devices, respectively. The RF input signal, thus conditioned, is fed via a 50-ohm coaxial cable to the RF/IF Amplifier Assembly.

5. MAINTENANCE

Assembly A2A4 is tested and adjusted as described in the following paragraphs. Paragraph 5.1 contains a checkout procedure that can be used for measuring the performance of the assembly installed in the RF-550. Paragraph 5.2 contains a detailed alignment procedure.

5.1 ASSEMBLY A2A4 CHECKOUT PROCEDURE

a. Equipment Required:
- Signal Generator, HP-606 or equivalent.
- Frequency Counter, Eldorado Model 1650.
- RF Millivoltmeter, Boonton 91H or equivalent (with 50-ohm termination).

b. Set up equipment as shown in figure 2.

c. Turn on RF-550 and select a frequency that falls in the band to be tested. If all filters are to be tested, repeat the procedure for each of the ten bands.

d. Adjust signal generator to center frequency of band to be tested and to a reference level of 0 dB.

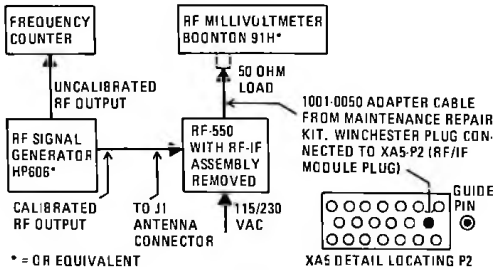

Figure 2. Test Setup for Assembly A2A4

e. Observe frequency meter indication and slowly sweep generator output through the pass band of the 1/2 octave filter. Indication on RF millivoltmeter should not fall more than 4 dB below reference level at the input and should remain constant within 1 dB until the -1 dB band-edge points are reached. Attenuation should increase sharply past -1 dB points.

f. To check low pass filter on Input Filter Control PWB Assembly A2A4A2, select 1 MHz at RF-550 and sweep signal generator output above 32 MHz. Insertion loss should increase sharply above 32 MHz. If indication is abnormal, replace board.

5.2 ASSEMBLY A2A4 ALIGNMENT PROCEDURE

This procedure should never be performed as a maintenance routine. Any attempt to adjust this assembly without the equipment described, or suitable substitutes, can cause serious degradation in performance. The assembly does not contain active components or elements exposed to wear, and, as a consequence, once adjusted by the manufacturer, should rarely require readjustment in the field. If, after a component replacement, measured performance indicates that alignment of the assembly is required, proceed as follows:

NOTE

Alignment of each band is primarily for flatness of response within the pass band. Selectivity of the skirts is of secondary importance.

a. Equipment Required:
- HF Tracking Generator, HP 8443
- HF Spectrum Analyzer, HP 8553B (RF)/8552B (IF)
- Maintenance Repair Kit 1001-0189

b. The equipment setup for alignment is shown in figure 3.

c. Adjust the spectrum analyzer for a log (dB) display of 0 dBm full scale, and 0-100 MHz scan mode.

d. Set tracking generator output to 0 dBm and the marker at 35 MHz.

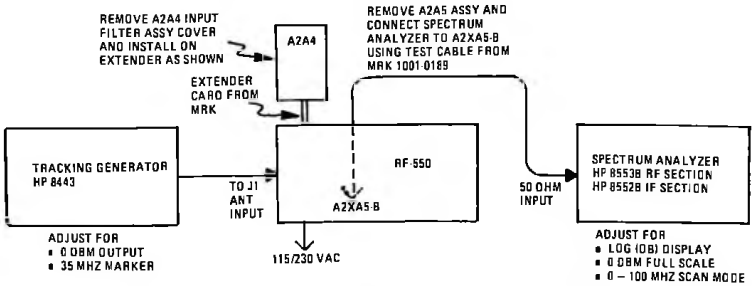

Figure 3. Alignment Test Setup for Assembly A2A4

e. At the RF-550 front panel, verify or select power on, local control, and any band 2 frequency (0.56-1.9999 MHz).

f. Locate L1 and L2 (see figure 10) on Filter Control PWB Assembly A2A4A2. (Adjustment access holes are provided through the circuit board.) Adjust L1 and L2 so that the marker is at the -1 dB point on the response curve and for best overall shape as shown in figure 4. Insertion loss within the pass band should be no more that 4 dB below the 0 dB reference line.

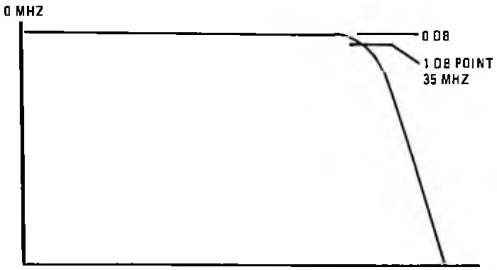

Figure 4. 35 MHz
LP Filter Adjustment

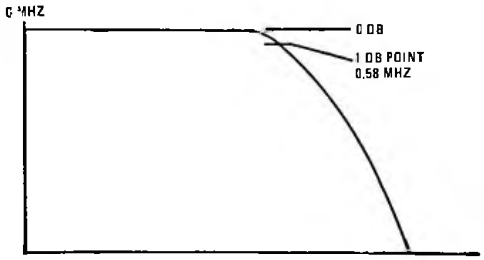

Figure 5. 0.58 MHz
LP Filter Adjustment

g. Adjust spectrum analyzer to display 0-1 MHz, set tracking generator marker at 0.58 MHz, and select any band 1 frequency (0.1-0.560 MHz).

h. Adjust L3 and L4 (see figure 8) on the 1/2-Octave Filter PWB Assembly so that the marker is at the -1 dB point on the response curve and for best overall shape as shown in figure 5. The insertion loss within the passband should not be more than 4 dB below the 0 dB reference.

NOTE

Alignment procedures are the same for the 8 remaining bands. Refer to table 1 and figures 6 and 7 for related frequencies and components. Be aware of the following: Inductors Z1 and Z2 produce notches in the frequency response below the pass band, and are the major factors determining the lower corner frequency. Likewise, inductors Z3 and Z4 produce frequency response notches (zeroes) above the pass band and are the major factors determining the upper corner frequency. Inductors P1, P2 and P3 produce peaks (poles) in the pass band response (which are quite indistinct because of their interaction with the circuit elements associated with inductors Z1 thru Z4) and are used to flatten the response within the pass band.

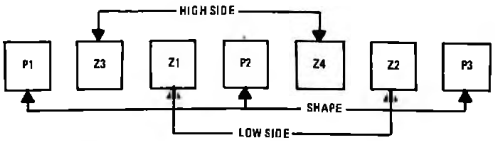

Figure 6. Inductor Location Diagram
(Each band is configured identically.)

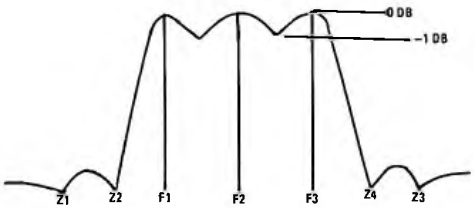

Figure 7. Inductor/Bandpass Relationships

TABLE 1. FILTER BAND DATA

BAND	FREQ (MHz)	INDUCTORS	LOW SIDE ZEROS		HIGH SIDE ZEROS		-1 DB POINTS	
			Z1 (MHz)	Z2 (MHz)	Z3 (MHz)	Z4 (MHz)	LOWER (MHz)	UPPER (MHz)
3	2 – 2.9999	L9 – L15	1.03	1.37	5.81	4.40	1.91	3.14
4	3 – 3.9999	L18 – L24	1.73	2.19	6.93	5.49	2.86	4.19
5	4 – 5.9999	L27 – L33	2.06	2.73	11.62	8.79	3.83	6.27
6	6 – 7.9999	L36 – L42	3.46	4.37	13.87	10.97	5.72	8.39
7	8 – 11.9999	L45 – L51	4.12	5.46	23.24	17.58	7.65	12.55
8	12 – 15.9999	L54 – L60	6.93	8.75	27.72	21.95	11.45	16.78
9	16 – 23.9999	L63 – L69	8.24	10.92	46.48	35.16	15.30	25.10
10	24 – 29.9999	L72 – L78	14.07	17.52	51.18	41.09	22.89	33.55

NOTE

The upper -1 dB point of the 24-32 MHz band can be set as low as 30.5 MHz if flatness is difficult to obtain with a 33.55 MHz upper -1 dB point.

i. Select a frequency within the band to be aligned, set spectrum analyzer scan width to 0.5 MHz/division and adjust tracking generator marker position and/or spectrum analyzer center frequency controls to position the marker at the Z1 frequency for the band being aligned (see table 1.)

j. Adjust the corresponding Z1 inductor (figure 6) so that its associated response notch is centered on the marker.

NOTES

- The depth and Q of the notch are of little importance.
- Sometimes the inductance range available will not be sufficient to position the response notch at the marker frequency. In such cases, position the notch as close to the marker as possible.
- The amplitude response in the vicinity of the notch is extremely low (60 to 80 dB down). Therefore, adjustment of the spectrum analyzer controls may be necessary. The band width may be reduced (requiring a slower sweep rate) and/or the analyzer input attenuation may be reduced. If the input attenuation is reduced, the spectrum analyzer will be overloaded when it sweeps through any part of the pass band. This overload may be reduced by adjusting the analyzer center frequency control (and re-adjusting the tracking generator marker position control to the desired notch frequency) so that as little of the pass band as possible is to be reduced to allow the analyzer time to recover from any remaining overload before the scan reaches the notch frequency point.
- Occasionally, no notch can be found corresponding to a particular "Z" inductor. In this case, set the inductor to the approximate center of its range.

k. Repeat steps i and j for the Z2, Z3, and Z4 frequencies of the band being aligned.

l. Re-adjust the spectrum analyzer input attenuation, if necessary, for a 0 dBm full

scale display. Adjust the spectrum analyzer center frequency and scan width controls so that the entire pass band and the skirts can be seen on the display.

m. Set the tracking generator marker to a convenient vertical graticule line on the right hand side of the display. Re-adjust the spectrum analyzer center frequency controls so that the marker (and, therefore, the graticule line) is at the upper -1 dB frequency, as shown in table 1.

n. Adjust the tracking generator marker position control so that the marker is at the lower -1 dB frequency as shown in table 1.

o. Adjust inductors P1, P2 and P3 for the flattest pass band response.

p. Adjust one of the low side zeroes (either Z1 or Z2) and one of the high side zeroes (either Z3 or Z4) for flatness out to the respective edges of the pass band and for good corner shape.

q. Repeat steps o and p, as necessary, to optimize pass band flatness and corner shape.

r. Check the upper and lower -1 dB points using the frequency references established in steps m and n. If either -1 dB point is not at the correct frequency, it can be moved by adjusting both of the corresponding "Z" inductors (Z1 and Z2 for the lower point or Z2 and Z3 for the upper point) by approximately equal amounts. Then re-adjust the three "P" inductors for pass band flatness.

NOTE

Steps o through r may have to be repeated several times to optimize the response.

s. Check insertion loss within the pass band. It should not be more than 4 dB.

t. Repeat steps i through s for each of the bands listed in table 1.

6. PARTS LIST

Table 2 is a listing of all parts in the Input Filter Assembly. Manufacturers' Codes are listed in table 3.

7. COMPONENT LOCATION AND SCHEMATIC DIAGRAMS

Figures 8 through 11 are component location and schematic diagrams for the Input Filter Assembly.

NOTICE

In some instances, the Integrated Circuit (IC) component types listed herein differ from those of the actual component. These components are physically and electronically interchangeable. Either type can be used for replacement purposes.

TABLE 2. PARTS LIST

REF DESIG	NOTES	NAME AND DESCRIPTION	FIG. NO
A2A4		Input Filter Assembly: MFR 14304, PN 1920-1200	
J1, J2		Connector, Bulkhead Subminiature: MFR 98291, PN 52-026-9130	
A2A4A1		1/2 Octave Filter PWB Assembly: MFR 14304, PN 1920-2310	
C1		Capacitor, Fixed, Ceramic, 0.1 μF, ±20%, 50V: MFR 14304, PN C11-0005-104	
C2		Capacitor, Fixed, Ceramic, 0.01 μF, ±20%, 50V: MFR 14304, PN C11-0005-103	
C3		Capacitor, Fixed, Plastic, 4700 pF, ±5%, 50V: MFR 14304, PN C4696	
C4		Capacitor, Fixed, Mica, 510 pF, ±5%, 100V: MFR 14655, PN CD7FA511J03	
C5		Capacitor, Fixed, Ceramic, 0.01 μF, ±20%, 50V: MFR 14304, PN C11-0005-103	
C6		Capacitor, Fixed, Mica, 200 pF, ±5%, 300V: MFR 14655, PN CD7FC201J03	
C7		Capacitor, Fixed, Plastic, 5600 pF, ±5%, 50V: MFR 14304, PN C4697	
C8		Capacitor, Fixed, Ceramic, 0.1 μF, ±20%, 50V: MFR 14304, PN C11-0005-104	
C9 to C11		Capacitor, Fixed, Ceramic, 0.01 μF, ±20%, 50V: MFR 14304, PN C11-0005-103	
C12		Capacitor, Fixed, Mica, 390 pF, ±5%, 500V: MIL Type CMR05F391J0DL	
C13		Capacitor, Fixed, Mica, 560 pF, ±5%, 100V: MFR 14655, PN CD7FA561J03	
C14		Capacitor, Fixed, Mica, 5 pF, ±1/2 pF, 500V: MIL Type CMR05C050D0DL	
C15		Capacitor, Fixed, Mica, 110 pF, ±5%, 500V: MIL Type CMR05F111J0DL	
C16		Capacitor, Fixed, Mica, 620 pF, ±5%, 100V: MFR 14655, CD7FA621J03	
C17		Capacitor, Fixed, Mica, 33 pF, ±5%, 500V: MIL Type CMR05E330J0DL	
C18		Capacitor, Fixed, Mica, 150 pF, ±5%, 500V: MIL Type CMR05F151J0DL	
C19		Capacitor, Fixed, Mica, 510 pF, ±5%, 100V: MFR 14655, PN CD7FA511J03	

TABLE 2. PARTS LIST (Cont)

REF DESIG	NOTES	NAME AND DESCRIPTION	FIG. NO.
C20		Capacitor, Fixed, Mica, 390 pF, ±5%, 500V: MIL Type CMR05F391J0DL	
C21, C22		Capacitor, Fixed, Ceramic, 0.01 μF, ±20%, 50V: MFR 14304, PN C11-0005-103	
C23		Capacitor, Fixed, Mica, 620 pF, ±5%, 100V: MFR 14655 PN CD7FA621J03	
C24		Capacitor, Fixed, Mica, 620 pF, ±5%, 100V: MFR 14655 CD7FA621J03	
C25		Capacitor, Fixed, Mica, 18 pF, ±5%, 500V: MIL Type CMR05C180J0DL	
C26		Capacitor, Fixed, Mica, 68 pF, ±5%, 500V: MIL Type CMR05E680J0DL	
C27		Capacitor, Fixed, Mica, 560 pF, ±5%, 100V: MFR 14655, PN CD7FA561J03	
C28		Capacitor, Fixed, Mica, 56 pF, ±5%, 500V: MIL Type CMR05E560J0DL	
C29		Capacitor, Fixed, Mica, 150 pF, ±5%, 500V: MIL Type CMR05F151J0DL	
C30		Capacitor, Fixed, Mica, 620 pF, ±5%, 100V: MFR 14655 CD7FA621J03	

REF DESIG	NOTES	NAME AND DESCRIPTION	FIG. NO.
C31		Capacitor, Fixed, Mica, 680 pF, ±5%, 100V: MFR 14655, PN CD7FA681J03	
C32, C33		Capacitor, Fixed, Ceramic, 0.01 μF, ±20%, 50V: MFR 14304, PN C11-0005-103	
C34		Capacitor, Fixed, Mica, 560 pF, ±5%, 100V: MFR 14655, PN CD7FA561J03	
C35		Capacitor, Fixed, Mica, 680 pF, ±5%, 100V: MFR 14655, PN CD7FA681J03	
C36		Capacitor, Fixed, Mica, 20 pF, ±5%, 500V: MIL Type CMR05E200J0DL	
C37		Capacitor, Fixed, Mica, 110 pF, ±5%, 500V: MIL Type CMR05F111J0DL	
C38		Capacitor, Fixed, Mica, 680 pF, ±5%, 100V: MFR 14655, PN CD7FA681J03	
C39		Capacitor, Fixed, Mica, 39 pF, ±5%, 500V: MIL Type CMR05E390J0DL	
C40		Capacitor, Fixed, Mica, 150 pF, ±5%, 500V: MIL Type CMR05F151J0DL	
C41		Capacitor, Fixed, Mica, 910 pF, ±5%, 100V: MFR 14655, PN CD7FA911J03	
C42		Capacitor, Fixed, Mica, 620 pF, ±5%, 100V: MFR 14655, CD7FA621J03	

TABLE 2. PARTS LIST (Cont)

REF DESIG	NOTES	NAME AND DESCRIPTION	FIG NO
C43, C44		Capacitor, Fixed, Ceramic, 0.01 μF, ±20%, 50V: MFR 14304, PN C11-0005-103	
C45		Capacitor, Fixed, Mica, 560 pF, ±5%, 100V: MFR 14655, PN CD7FA561J03	
C46		Capacitor, Fixed, Mica, 680 pF, ±5%, 100V: MFR 14655, PN CD7FA681J03	
C47		Capacitor, Fixed, Mica, 18 pF, ±5%, 500V: MIL Type CMR05C180JODL	
C48		Capacitor, Fixed, Mica, 82 pF, ±5%, 500V: MIL Type CMR05E820JODL	
C49		Capacitor, Fixed, Mica, 560 pF, ±5%, 100V: MFR 14655, PN CD7FA561J03	
C50		Capacitor, Fixed, Mica, 56 pF, ±5%, 500V: MIL Type CMR05E560JODL	
C51		Capacitor, Fixed, Mica, 150 pF, ±5%, 500V: MIL Type CMR05F151JODL	
C52		Capacitor, Fixed, Mica, 620 pF, ±5%, 100V: MFR 14655, CD7FA621J03	
C53		Capacitor, Fixed, Mica, 470 pF, ±5%, 100V: MFR 14655, PN CD7FA471J03	

REF DESIG	NOTES	NAME AND DESCRIPTION	FIG. NO.
C54, C55		Capacitor, Fixed, Ceramic, 0.01 μF, ±20%, 50V: MFR 14304, PN C11-0005-103	
C56		Capacitor, Fixed, Mica, 300 pF, ±5%, 500V: MIL Type CMR05F301JODL	
C57		Capacitor, Fixed, Mica, 390 pF, ±5%, 500V: MIL Type CMR05F391JODL	
C58		Capacitor, Fixed, Mica, 10 pF, ±1/2 pF, 500V: MIL Type CMR05C100DODL	
C59		Capacitor, Fixed, Mica, 56 pF, ±5%, 500V: MIL Type CMR05E560JODL	
C60		Capacitor, Fixed, Mica, 300 pF, ±5%, 500V: MIL Type CMR05F301JODL	
C61		Capacitor, Fixed, Mica, 18 pF, ±5%, 500V: MIL Type CMR05C180JODL	
C62		Capacitor, Fixed, Mica, 62 pF, ±5%, 500V: MIL Type CMR05E620JODL	
C63		Capacitor, Fixed, Mica, 390 pF, ±5%, 500V: MIL Type CMR05F391JODL	
C64		Capacitor, Fixed, Mica, 330 pF, ±5%, 500V: MIL Type CMR05F331JODL	

TABLE 2. PARTS LIST (Cont)

REF DESIG	NOTES	NAME AND DESCRIPTION	FIG NO
C65, C66		Capacitor, Fixed, Ceramic, 0.01 μF, ±20%, 50V: MFR 14304, PN C11-0005-103	
C67		Capacitor, Fixed, Mica, 300 pF, ±5%, 500V: MIL Type CMR05F301J0DL	
C68		Capacitor, Fixed, Mica, 360 pF, ±5%, 500V: MIL Type CMR05F361J0DL	
C69		Capacitor, Fixed, Mica, 10 pF, ±1/2 pF, 500V: MIL Type C CMR05C100D0DL	
C70		Capacitor, Fixed, Mica, 27 pF, ±5%, 500V: MIL Type CMR05E270J0DL	
C71		Capacitor, Fixed, Mica, 270 pF, ±5%, 500V: MIL Type CMR05F271J0DL	
C72		Capacitor, Fixed, Mica, 27 pF, ±5%, 500V: MIL Type CMR05E270J0DL	
C73		Capacitor, Fixed, Mica, 75 pF, ±5%, 500V: MIL Type CMR05E750J0DL	
C74		Capacitor, Fixed, Mica, 390 pF, ±5%, 500V: MIL Type CMR05F391J0DL	
C75		Capacitor, Fixed, Mica, 300 pF, ±5%, 500V: MIL Type CMR05F301J0DL	

REF DESIG	NOTES	NAME AND DESCRIPTION	FIG. NO.
C76, C77		Capacitor, Fixed, Ceramic, 0.01 μF, ±20%, 50V: MFR 14304, PN C11-0005-103	
C78		Capacitor, Fixed, Mica, 240 pF, ±5%, 500V: MIL Type CMR05F241J0DL	
C79		Capacitor, Fixed, Mica, 680 pF, ±5%, 100V: MFR 14655, PN CD7FA681J03	
C80		Capacitor, Fixed, Mica, 10 pF, ±1/2 pF, 500V: MIL Type CMR05C100D0DL	
C81		Capacitor, Fixed, Mica, 62 pF, ±5%, 500V: MIL Type CMR05E620J0DL	
C82		Capacitor, Fixed, Mica, 300 pF, ±5%, 500V: MIL Type CMR05F301J0DL	
C83		Capacitor, Fixed, Mica, 20 pF, ±5%, 500V: MIL Type CMR05E200J0DL	
C84		Capacitor, Fixed, Mica, 75 pF, ±5%, 500V: MIL Type CMR05E750J0DL	
C85		Capacitor, Fixed, Mica, 680 pF, ±5%, 100V: MFR 14655, PN CD7FA681J03	
C86		Capacitor, Fixed, Mica, 220 pF, ±5%, 500V: MIL Type CMR05F221J0DL	

TABLE 2. PARTS LIST (Cont)

REF DESIG	NOTES	NAME AND DESCRIPTION	FIG NO
C87, C88		Capacitor, Fixed, Ceramic, 0.01 μF, ±20%, 50V: MFR 14304, PN C11-0005-103	
C89		Capacitor, Fixed, Mica, 150 pF, ±5%, 500V: MIL Type CMR05F151JODL	
C90		Capacitor, Fixed, Mica, 680 pF, ±5%, 100V: MFR 14655, PN CD7FA681J03	
C91		Capacitor, Fixed, Mica, 10 pF, ±1/2 pF, 500V: MIL Type CMR05C100DODL	
C92		Capacitor, Fixed, Mica, 39 pF, ±5%, 500V: MIL Type CMR05E390JODL	
C93		Capacitor, Fixed, Mica, 270 pF, ±5%, 500V: MIL Type CMR05F271JODL	
C94		Capacitor, Fixed, Mica, 39 pF, ±5%, 500V: MIL Type CMR05E390JODL	
C95		Capacitor, Fixed, Mica, 82 pF, ±5%, 500V: MIL Type CMR05E820JODL	
C96		Capacitor, Fixed, Mica, 620 pF, ±5%, 100V: MFR 14655, CD7FA621J03	
C97		Capacitor, Fixed, Mica, 150 pF, ±5%, 500V: MIL Type CMR05F151JODL	
C98, C99		Capacitor, Fixed, Ceramic, 0.01 μF, ±20%, 50V: MFR 14304, PN C11-0005-103	
C100		Capacitor, Fixed, Ceramic, 0.47 μF, ±20%, 50V: MFR 14304, PN C11-0005-474	
C101, C102		Capacitor, Fixed, Ceramic, 0.1 μF, ±20%, 50V: MFR 14304, PN C11-0005-104	
C103 to C118		Capacitor, Fixed, Ceramic, 0.01 μF, ±20%, 50V: MFR 14304, PN C11-0005-103	
CR1		Diode: MFR 28480, PN 5082-3168	
CR2		Diode: Type 1N3064	
CR3		Diode: MFR 28480, PN 5082-3168	
CR4		Diode: Type 1N3064	
CR5		Diode: MFR 28480, PN 5082-3168	
CR6		Diode: Type 1N3064	
CR7		Diode: MFR 28480, PN 5082-3168	
CR8		Diode: Type 1N3064	
CR9		Diode: MFR 28480, PN 5082-3168	
CR10		Diode: Type 1N3064	
CR11		Diode: MFR 28480, PN 5082-3168	
CR12		Diode: Type 1N3064	
CR13		Diode: MFR 28480, PN 5082-3168	

TABLE 2. PARTS LIST (Cont)

REF DESIG	NOTES	NAME AND DESCRIPTION	FIG NO
CR14		Diode: Type 1N3064	
CR15		Diode: MFR 28480, PN 5082-3168	
CR16		Diode: Type 1N3064	
CR17		Diode: MFR 28480, PN 5082-3168	
CR18		Diode: Type 1N3064	
CR19		Diode: MFR 28480, PN 5082-3168	
CR20		Diode: Type 1N3064	
CR21		Diode: MFR 28480, PN 5082-3168	
CR22		Diode: Type 1N3064	
CR23		Diode: MFR 28480, PN 5082-3168	
CR24		Diode: Type 1N3064	
CR25		Diode: MFR 28480, PN 5082-3168	
CR26		Diode: Type 1N3064	
CR27		Diode: MFR 28480, PN 5082-3168	
CR28		Diode: Type 1N3064	
CR29		Diode: MFR 28480, PN 5082-3168	
CR30		Diode: Type 1N3064	
CR31		Diode: MFR 28480, PN 5082-3168	
CR32		Diode: Type 1N3064	
CR33		Diode: MFR 28480, PN 5082-3168	
CR34		Diode: Type 1N3064	

REF DESIG	NOTES	NAME AND DESCRIPTION	FIG NO
CR35		Diode: MFR 28480, PN 5082-3168	
CR36		Diode: Type 1N3064	
CR37		Diode: MFR 28480, PN 5082-3168	
CR38		Diode: Type 1N3064	
CR39		Diode: MFR 28480, PN 5082-3168	
CR40		Diode: Type 1N3064	
L1, L2		Inductor, Fixed, RF, 1 mH: MIL Type LT10K036	
L3, L4		Inductor, Variable, 22 μH: MFR 14304, PN L11-0004-029	
L5 to L8		Inductor, Fixed, RF, 220 μH: MIL Type LT10K020	
L9		Inductor, Variable, 12 μH: MFR 14304, PN L11-0004-026	
L10		Inductor, Variable, 39 μH: MFR 14304, PN L11-0004-032	
L11		Inductor, Variable, 220 μH: MFR 14304, PN L11-0004-041	
L12		Inductor, Variable, 6.8 μH: MFR 14304, PN L11-0004-023	
L13		Inductor, Variable, 33 μH: MFR 14304, PN L11-0004-031	
L14		Inductor, Variable, 120 μH: MFR 14304, PN L11-0004-038	
L15		Inductor, Variable, 12 μH: MFR 14304, PN L11-0004-026	

TABLE 2. PARTS LIST (Cont)

REF DESIG	NOTES	NAME AND DESCRIPTION	FIG. NO.
L16, L17		Inductor, Fixed, RF, 220 μH: MIL Type LT10K020	
L18		Inductor, Variable, 6.8 μH: MFR 14304, PN L11-0004-023	
L19		Inductor, Variable, 27 μH: MFR 14304, PN L11-0004-030	
L20		Inductor, Variable, 120 μH: MFR 14304, PN L11-0004-038	
L21		Inductor, Variable, 3.9 μH: MFR 14304, PN L11-0004-020	
L22		Inductor, Variable, 15 μH: MFR 14304 PN L11-0004-027	
L23		Inductor, Variable, 39 μH: MFR 14304, PN L11-0004-032	
L24		Inductor, Variable, 6.8 μH: MFR 14304, PN L11-0004-023	
L25, L26		Inductor, Fixed, RF, 220 μH: MIL Type LT10K020	
L27		Inductor, Variable, 3.3 μH: MFR 14304, PN L11-0004-019	
L28		Inductor, Variable, 10 μH: MFR 14304, PN L11-0004-025	
L29		Inductor, Variable, 56 μH: MFR 14304, PN L11-0004-034	
L30		Inductor, Variable, 1.8 μH: MFR 14304, PN L11-0004-016	

REF DESIG	NOTES	NAME AND DESCRIPTION	FIG. NO.
L31		Inductor, Variable, 8.2 μH: MFR 14304, PN L11-0004-024	
L32		Inductor, Variable, 27 μH: MFR 14304, PN L11-0004-030	
L33		Inductor, Variable, 3.3 μH: MFR 14304, PN L11-0004-019	
L34, L35		Inductor, Fixed, RF, 220 μH: MIL Type LT10K020	
L36		Inductor, Variable, 1.5 μH: MFR 14304, PN L11-0004-015	
L37		Inductor, Variable, 6.8 μH: MFR 14304, PN L11-0004-023	
L38		Inductor, Variable, 27 μH: MFR 14304, PN L11-0004-030	
L39		Inductor, Variable, 1.0 μH: MFR 14304, PN L11-0004-013	
L40		Inductor, Variable, 3.9 μH: MFR 14304, PN L11-0004-020	
L41		Inductor, Variable, 10 μH: MFR 14304, PN L11-0004-025	
L42		Inductor, Variable, 1.8 μH: MFR 14304, PN L11-0004-016	
L43, L44		Inductor, Fixed, RF, 220 μH: MIL Type LT10K020	
L45		Inductor, Variable, 1.5 μH: MFR 14304, PN L11-0004-015	

TABLE 2. PARTS LIST (Cont)

REF DESIG	NOTES	NAME AND DESCRIPTION	FIG. NO.
L46		Inductor, Variable, 4.7 μH: MFR 14304, PN L11-0004-021	
L47		Inductor, Variable, 27 μH: MFR 14304, PN L11-0004-030	
L48		Inductor, Variable, 0.82 μH: MFR 14304, PN L11-0004-012	
L49		Inductor, Variable, 4.7 μH: MFR 14304, PN L11-0004-021	
L50		Inductor, Variable, 15 μH: MFR 14304, PN L11-0004-027	
L51		Inductor, Variable, 1.5 μH: MFR 14304, PN L11-0004-015	
L52, L53		Inductor, Fixed, RF, 220 μH: MIL Type LT10K020	
L54		Inductor, Variable, 0.82 μH: MFR 14304, PN L11-0004-012	
L55		Inductor, Variable, 3.3 μH: MFR 14304, PN L11-0004-019	
L56		Inductor, Variable, 15 μH: MFR 14304, PN L11-0004-027	
L57		Inductor, Variable, 0.47 μH: MFR 14304, PN L11-0004-009	
L58		Inductor, Variable, 1.8 μH: MFR 14304, PN L11-0004-016	
L59		Inductor, Variable, 4.7 μH: MFR 14304, PN L11-0004-021	
L60		Inductor, Variable, 0.82 μH: MFR 14304, PN L11-0004-012	
L61, L62		Inductor, Fixed, RF, 220 μH: MIL Type LT10K020	
L63		Inductor, Variable, 0.39 μH: MFR 14304, PN L11-0004-008	
L64		Inductor, Variable, 1.2 μH: MFR 14304, PN L11-0004-014	
L65		Inductor, Variable, 6.8 μH: MFR 14304, PN L11-0004-023	
L66		Inductor, Variable, 0.22 μH: MFR 14304, PN L11-0004-005	
L67		Inductor, Variable, 1.0 μH: MFR 14304, PN L11-0004-013	
L68		Inductor, Variable, 3.3 μH: MFR 14304, PN L11-0004-019	
L69		Inductor, Variable, 0.39 μH: MFR 14304, PN L11-0004-008	
L70, L71		Inductor, Fixed, RF, 220 μH: MIL Type LT10K020	
L72		Inductor, Variable, 0.22 μH: MFR 14304, PN L11-0004-005	
L73		Inductor, Variable, 0.82 μH: MFR 14304, PN L11-0004-012	
L74		Inductor, Variable, 3.3 μH: MFR 14304, PN L11-0004-019.	

TABLE 2. PARTS LIST (Cont)

REF DESIG	NOTES	NAME AND DESCRIPTION	FIG NO
L75		Inductor, Variable, 0.12 μH: MFR 14304, PN L11-0004-002	
L76		Inductor, Variable, 0.47 μH: MFR 14304, PN L11-0004-009	
L77		Inductor, Variable, 1.2 μH: MFR 14304, PN L11-0004-014	
L78		Inductor, Variable, 0.22 μH: MFR 14304, PN L11-0004-005	
L79, L80		Inductor, Fixed, RF, 1 μH: MIL Type LT4K351	
R1 to R10		Resistor, Fixed, Composition, 270 ohms, ±10%, 1/4W: MIL Type RCR07G271KM	
R11		Resistor, Fixed, Composition, 430 ohms, ±5%, 1/2W: MIL Type RCR20G431JM	
R12		Resistor, Fixed, Composition, 1K, ±10%, 1/2W: MIL Type RCR20G102KM	
R13		Resistor, Fixed, Composition, 18 ohms, ±5%, 1/2W: MIL Type RCR07G180JM	
R14		Resistor, Fixed, Composition, 220 ohms, ±5%, 1/2W: MIL Type RCR20G221JM	
T1, T2		Transformer, 1:1, MFR 14304, PN 1920-0617	

REF DESIG	NOTES	NAME AND DESCRIPTION	FIG NO
A2A4A2		Filter Control PWB Assembly: MFR 14304, PN 1920-2320	
C1		Capacitor, Fixed, Mica, 3 pF, ±1/2 pF, 500V: MFR 14655, PN CD6CA030D03	
C2		Capacitor, Fixed, Mica, 10 pF, ±1/2 pF, 500V: MIL Type CMR05C100D0DL	
C3		Capacitor, Fixed, Mica, 91 pF, ±5%, 500V: MIL Type CMR05F910J0DL	
C4		Capacitor, Fixed, Mica, 160 pF, ±5%, 500V: MIL Type CMR05F161J0DL	
C5		Capacitor, Fixed, Mica, 82 pF, ±5%, 500V: MIL Type CMR05E820J0DL	
C6		Capacitor, Fixed, Ceramic, 0.01 μF, 100V: MFR 72982, PN 8121-100-651-103M	
C7		Capacitor, Fixed, Ceramic, 0.1 μF, ±20%, 50V: MFR 14304, PN C11-0005-104	
C8		Capacitor, Fixed, Ceramic, 0.01 μF, ±20%, 50V: MFR 14304, PN C11-0005-103	
C9		Capacitor, Fixed, Ceramic, 0.1 μF, ±20%, 50V: MFR 14304, PN C11-0005-104	

TABLE 2. PARTS LIST (Cont)

REF DESIG	NOTES	NAME AND DESCRIPTION	FIG. NO
C10		Capacitor, Fixed, Ceramic, 10 μF, ±20%, 35V: MFR 12954, PN D10GSC35M	
C11		Capacitor, Fixed, Ceramic, 0.1 μF, ±20%, 50V: MFR 14304, PN C11-0005-104	
C12		Capacitor, Fixed, Ceramic, 0.01 μF, ±20%, 50V: MFR 14304, PN C11-0005-103	
C13		Capacitor, Fixed, Ceramic, 0.1 μF, ±20%, 50V: MFR 14304, PN C11-0005-104	
CR1		Diode: Type 1N3611	
CR2, CR3		Diode: Type 1N4148	
K1		Relay, Reed, 12V: MFR 09026, PN 10A6N-AB12	
L1, L2		Inductor, Variable, 0.33 μH: MFR 14304, PN L11-0004-007	
P1, P2		Connector, Coaxial: MFR 98291, PN 52-053-0000	
Q1		Transistor, NPN: Type 2N2222	
Q2		Transistor, PNP: Type 2N2907	
Q3		Transistor, NPN: Type 2N2222	
Q4		Transistor, PNP: Type 2N2907	

REF DESIG	NOTES	NAME AND DESCRIPTION	FIG. NO.
Q5		Transistor, NPN: Type 2N2222	
Q6		Transistor, PNP: Type 2N2907	
Q7		Transistor, NPN: Type 2N2222	
Q8		Transistor, PNP: Type 2N2907	
Q9		Transistor, NPN: Type 2N2222	
Q10		Transistor, PNP: Type 2N2907	
Q11		Transistor, NPN: Type 2N2222	
Q12		Transistor, PNP: Type 2N2907	
Q13		Transistor, NPN: Type 2N2222	
Q14		Transistor, PNP: Type 2N2907	
Q15		Transistor, NPN: Type 2N2222	
Q16		Transistor, PNP: Type 2N2907	
Q17		Transistor, NPN: Type 2N2222	
Q18		Transistor, PNP: Type 2N2907	
Q19		Transistor, NPN: Type 2N2222	
Q20		Transistor, PNP: Type 2N2907	
Q21		Transistor, NPN: Type 2N2222	

TABLE 2. PARTS LIST (Cont)

REF DESIG	NOTES	NAME AND DESCRIPTION	FIG. NO.
R1		Resistor, Fixed, Composition, 27K, ±10%, 1/4W: MIL Type RCR07G273KM	
R2		Resistor, Fixed, Composition, 100K, ±10%, 1/4W: MIL Type RCR07G104KM	
R3		Resistor, Fixed, Composition, 470 ohms, ±10%, 1/4W: MIL Type RCR07G471KM	
R4		Resistor, Fixed, Composition, 1.5K, ±10%, 1/4W: MIL Type RCR07G152KM	
R5		Resistor, Fixed, Composition, 2.2K, ±10%, 1/4W: MIL Type RCR07G222KM	
R6		Resistor, Fixed, Composition, 27K, ±10%, 1/4W: MIL Type RCR07G273KM	
R7		Resistor, Fixed, Composition, 100K, ±10%, 1/4W: Mil Type RCR07G104KM	
R8		Resistor, Fixed, Composition, 470 ohms, ±10%, 1/4W: MIL Type RCR07G471KM	
R9		Resistor, Fixed, Composition, 1.5K, ±10%, 1/4W: MIL Type RCR07G152KM	

REF DESIG	NOTES	NAME AND DESCRIPTION	FIG. NO.
R10		Resistor, Fixed, Composition, 2.2K, ±10%, 1/4W: MIL Type RCR07G222KM	
R11		Resistor, Fixed, Composition, 27K, ±10%, 1/4W: MIL Type RCR07G273KM	
R12		Resistor, Fixed, Composition, 100K, ±10%, 1/4W: MIL Type RCR07G104KM	
R13		Resistor, Fixed, Composition, 470 ohms, ±10%, 1/4W: MIL Type RCR07G471KM	
R14		Resistor, Fixed, Composition, 1.5K, ±10%, 1/4W: MIL Type RCR07G152KM	
R15		Resistor, Fixed, Composition, 2.2K, ±10%, 1/4W: MIL Type RCR07G222KM	
R16		Resistor, Fixed, Composition, 27K, ±10%, 1/4W: MIL Type RCR07G273KM	
R17		Resistor, Fixed, Composition, 100K, ±10%, 1/4W: MIL Type RCR07G104KM	
R18		Resistor, Fixed, Composition, 470 ohms, ±10%, 1/4W: MIL Type RCR07G471KM	

TABLE 2. PARTS LIST (Cont)

REF DESIG	NOTES	NAME AND DESCRIPTION	FIG. NO
R19		Resistor, Fixed, Composition, 1.5K, ±10%, 1/4W: MIL Type RCR07G152KM	
R20		Resistor, Fixed, Composition, 2.2K, ±10%, 1/4W: MIL Type RCR07G222KM	
R21		Resistor, Fixed, Composition, 27K, ±10%, 1/4W: MIL Type RCR07G273KM	
R22		Resistor, Fixed, Composition, 100K, ±10%, 1/4W: MIL Type RCR07G104KM	
R23		Resistor, Fixed, Composition, 470 ohms, ±10%, 1/4W: MIL Type RCR07G471KM	
R24		Resistor, Fixed, Composition, 1.5K, ±10%, 1/4W: MIL Type RCR07G152KM	
R25		Resistor, Fixed, Composition, 2.2K, ±10%, 1/4W: MIL Type RCR07G222KM	
R26		Resistor, Fixed, Composition, 27K, ±10%, 1/4W: MIL Type RCR07G273KM	
R27		Resistor, Fixed, Composition, 100K, ±10%, 1/4W: MIL Type RCR07G104KM	

REF DESIG	NOTES	NAME AND DESCRIPTION	FIG. NO.
R28		Resistor, Fixed, Composition, 470 ohms, ±10%, 1/4W: MIL Type RCR7G471KM	
R29		Resistor, Fixed, Composition, 1/5K, ±10%, 1/4W: MIL Type RCR07G152KM	
R30		Resistor, Fixed, Composition, 2.2K, ±10%, 1/4W: MIL Type RCR07G222KM	
R31		Resistor, Fixed, Composition, 27K, ±10%, 1/4W: MIL Type RCR07G273KM	
R32		Resistor, Fixed, Composition, 100K, ±10%, 1/4W: MIL Type RCR07G104KM	
R33		Resistor, Fixed, Composition, 470 ohms, ±10%, 1/4W: MIL Type RCR07G471KM	
R34		Resistor, Fixed, Composition, 1.5K, ±10%, 1/4W: MIL Type RCR07G152KM	
R35		Resistor, Fixed, Composition, 2.2K, ±10%, 1/4W: MIL Type RCR07G222KM	
R36		Resistor, Fixed, Composition, 27K, ±10%, 1/4W: MIL Type RCR07G273KM	

TABLE 2. PARTS LIST (Cont)

REF DESIG	NOTES	NAME AND DESCRIPTION	FIG. NO.
R37		Resistor, Fixed, Composition, 100K, ±10%, 1/4W: MIL Type RCR07G104KM	
R38		Resistor, Fixed, Composition, 470 ohms, ±10%, 1/4W: MIL Type RCR07G471KM	
R39		Resistor, Fixed, Composition, 1.5K, ±10%, 1/4W: MIL Type RCR07G152KM	
R40		Resistor, Fixed, Composition, 2.2K, ±10%, 1/4W: MIL Type RCR07G222KM	
R41		Resistor, Fixed, Composition, 27K, ±10%, 1/4W: MIL Type RCR07G273KM	
R42		Resistor, Fixed, Composition, 100K, ±10%, 1/4W: MIL Type RCR07G104KM	
R43		Resistor, Fixed, Composition, 470 ohms, ±10%, 1/4W: MIL Type RCR07G471KM	
R44		Resistor, Fixed, Composition, 1.5K, ±10%, 1/4W: MIL Type RCR07G152KM	
R45		Resistor, Fixed, Composition, 2.2K, ±10%, 1/4W: MIL Type RCR07G222KM	

REF DESIG	NOTES	NAME AND DESCRIPTION	FIG. NO.
R46		Resistor, Fixed, Composition, 27K, ±10%, 1/4W: MIL Type RCR07G273KM	
R47		Resistor, Fixed, Composition, 100K, ±10%, 1/4W: MIL Type RCR07G104KM	
R48		Resistor, Fixed, Composition, 470 ohms, ±10%, 1/4W: MIL Type RCR07G471KM	
R49		Resistor, Fixed, Composition, 1.5K, ±10%, 1/4W: MIL Type RCR07G152KM	
R50		Resistor, Fixed, Composition, 2.2K, ±10%, 1/4W: MIL Type RCR07G222KM	
R51		Resistor, Fixed, Composition, 22K, ±5%, 1/4W: MIL Type RCR07G223JM	
R52		Resistor, Fixed, Composition, 220 ohms, ±5%, 1/2W: MIL Type RCR20G221JM	
R53		Resistor, Fixed, Composition, 100K, ±5%, 1/4W: MIL Type RCR07G104JM	
R54		Resistor, Fixed, Composition, 47K, ±5%, 1/4W: MIL Type RCR07G473JM	

TABLE 2. PARTS LIST (Cont)

REF DESIG	NOTES	NAME AND DESCRIPTION	FIG. NO.
R55		Resistor, Fixed, Wirewound, 2.7K,±5%,1W: MFR 72259 PN 100NS2700-5	
R56		Resistor, Fixed, Composition, 22K, ±10%, 1/4W: MIL Type RCR07G223KM	

REF DESIG	NOTES	NAME AND DESCRIPTION	FIG. NO.
R57		Resistor, Fixed, Composition, 22 ohms, ±10%, 1/4W: MIL Type RCR07G220KM	

TABLE 3. INDEX OF MANUFACTURERS' CODES

MFR CODE	MFR NAME AND ADDRESS
09026	Babcock Electronics Corp. Control Products Division P.O. Box 1499 3501 Harbor Blvd. Costa Mesa, California 92626
14304	Harris Corporation RF Communications Division 1680 University Avenue Rochester, New York 14610
14655	Cornell-Dubelier Electronics Division of Federal Pacific Electric Co. Govt. Contracts Dept. 150 Avenue L Newark, New Jersey 07101
28480	Hewlett-Packard Company Corporate Hq. 1501 Page Mill Road Palo Alto, California 94304
72259	Nytronics Inc. 10 Pelham Parkway Pelham Manor, NY 10803
98291	Sealectro Corporation 225 Hoyt Mamaroneck, New York 10544

NOTES:

1. Prefix all reference designators with A2A4.
2. Unless otherwise specified:
   A. All resistors are in ohms, $\frac{1}{4}$W, $\pm$10%.
   B. All capacitors are in picofarads.
   C. All diodes are 1N3064.

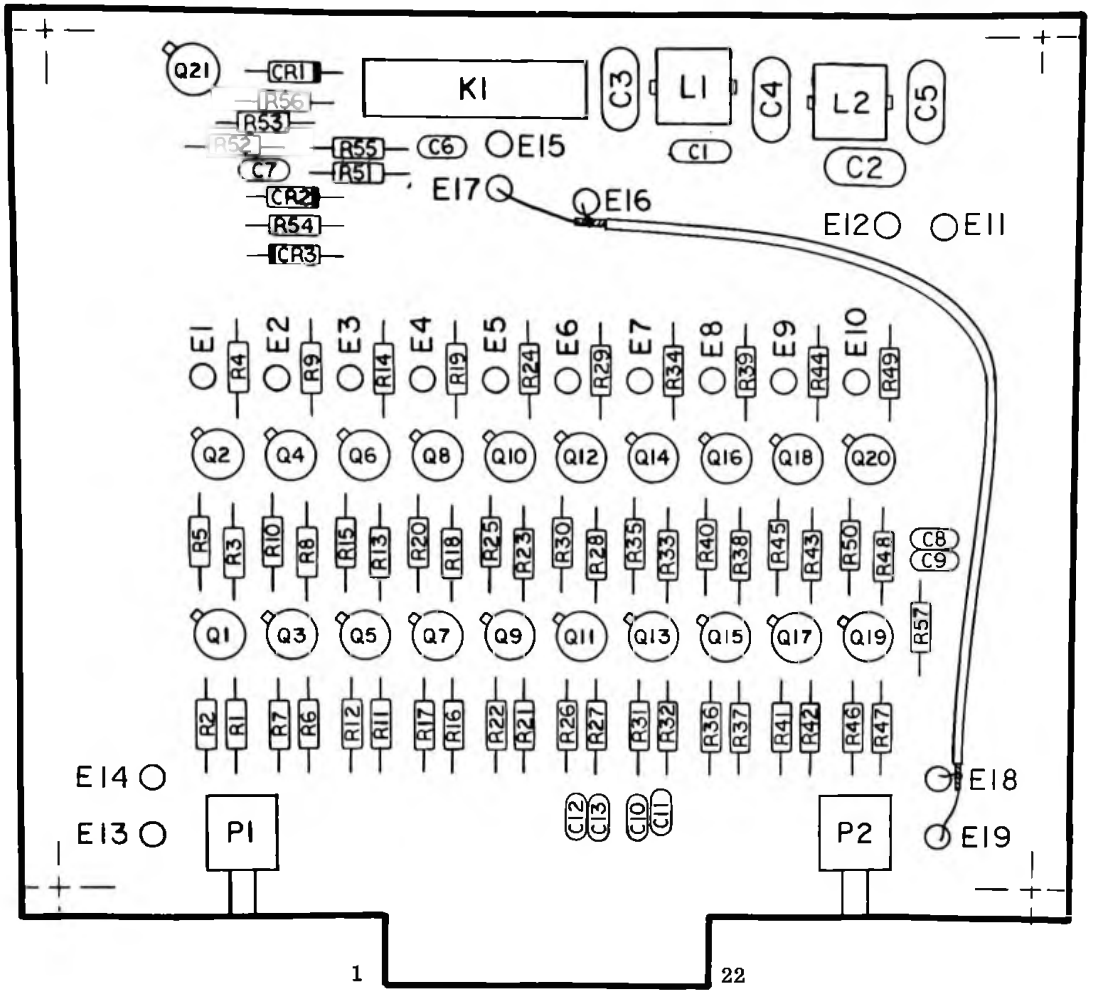

Figure 8. Input Filter Control PWB Assembly, Component Locations

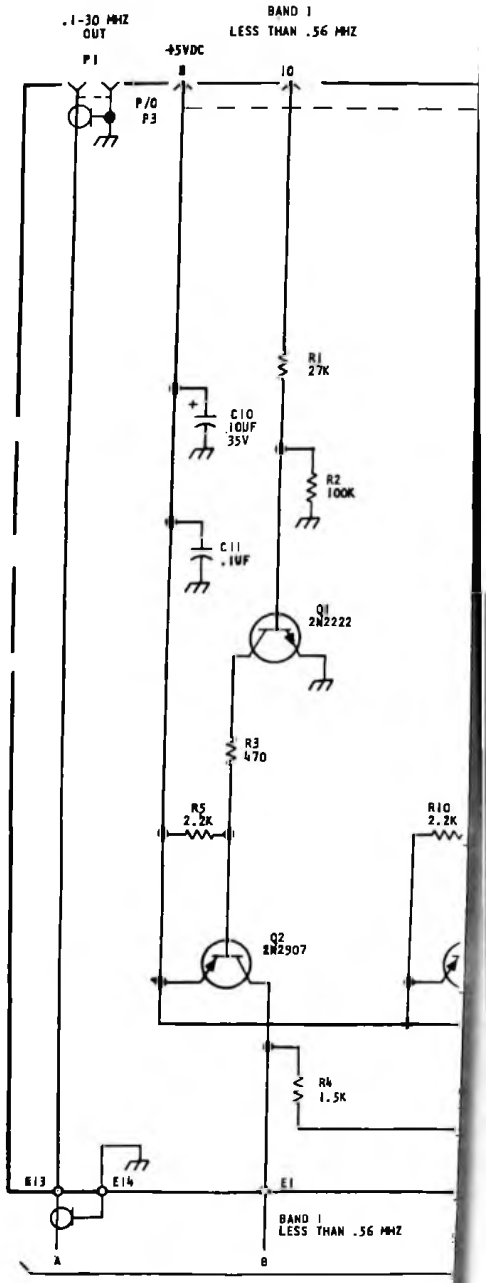

A2A4.

%.

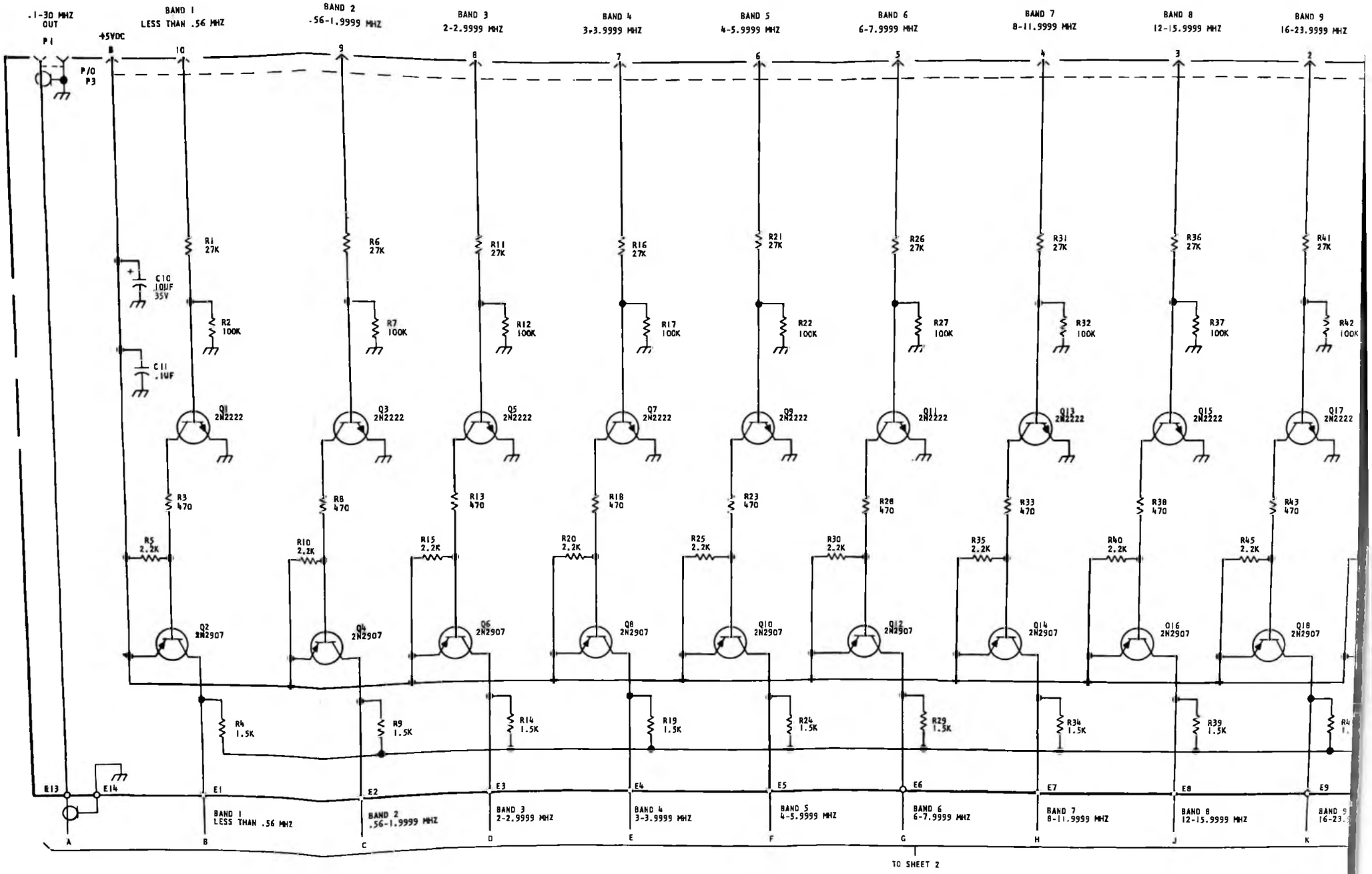
.1-30 MHZ OUT
P1
+5VDC
P/O P3
BAND 1 LESS THAN .56 MHZ
BAND 2 .56-1.9999 MHZ
BAND 3 2-2.9999 MHZ
BAND 4 3-3.9999 MHZ
BAND 5 4-5.9999 MHZ
BAND 6 6-7.9999 MHZ
BAND 7 8-11.9999 MHZ
BAND 8 12-15.9999 MHZ
BAND 9 16-23.9999 MHZ
C10 10UF 35V
C11 .1UF
R1 27K
R2 100K
R3 470
R4 1.5K
R5 2.2K
Q1 2N2222
Q2 2N2907
R6 27K
R7 100K
R8 470
R9 1.5K
R10 2.2K
Q3 2N2222
Q4 2N2907
R11 27K
R12 100K
R13 470
R14 1.5K
R15 2.2K
Q5 2N2222
Q6 2N2907
R16 27K
R17 100K
R18 470
R19 1.5K
R20 2.2K
Q7 2N2222
Q8 2N2907
R21 27K
R22 100K
R23 470
R24 1.5K
R25 2.2K
Q9 2N2222
Q10 2N2907
R26 27K
R27 100K
R28 470
R29 1.5K
R30 2.2K
Q11 2N2222
Q12 2N2907
R31 27K
R32 100K
R33 470
R34 1.5K
R35 2.2K
Q13 2N2222
Q14 2N2907
R36 27K
R37 100K
R38 470
R39 1.5K
R40 2.2K
Q15 2N2222
Q16 2N2907
R41 27K
R42 100K
R43 470
R45 2.2K
Q17 2N2222
Q18 2N2907
E13
E14
E1
E2
E3
E4
E5
E6
E7
E8
E9
A
B
C
D
E
F
G
H
J
K
TO SHEET 2

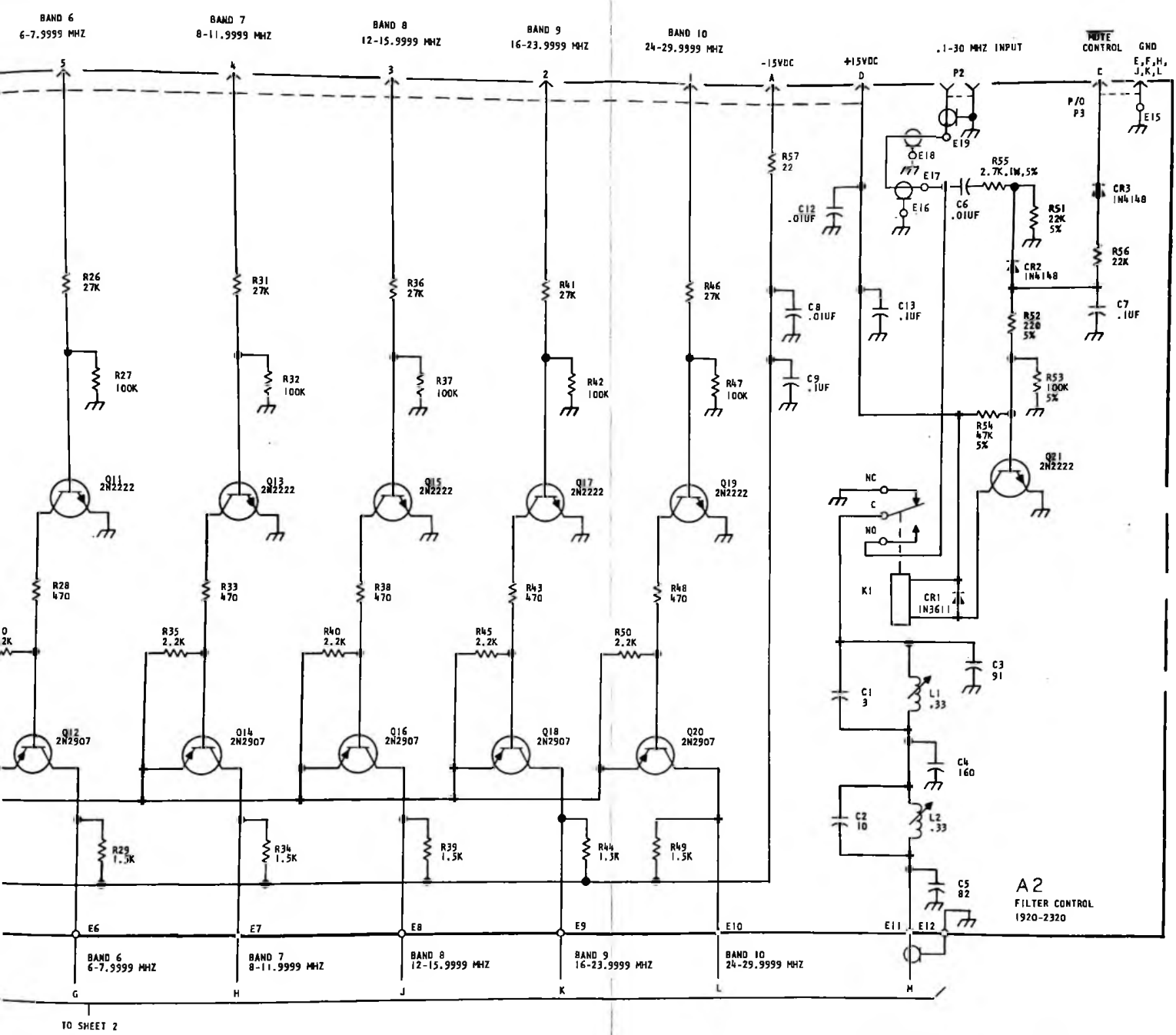

Figure 9. Input Filter Control PWB Assembly, Schematic Diagram

NOTES:

1. Prefix all reference designators with A2A4.
2. Unless otherwise specified:
   A. All resistors are in ohms, $\frac{1}{4}$W, $\pm$10%.
   B. All capacitors are in picofarads.
   C. All diodes are 1N3064.
   D. All inductors are in microhenries.

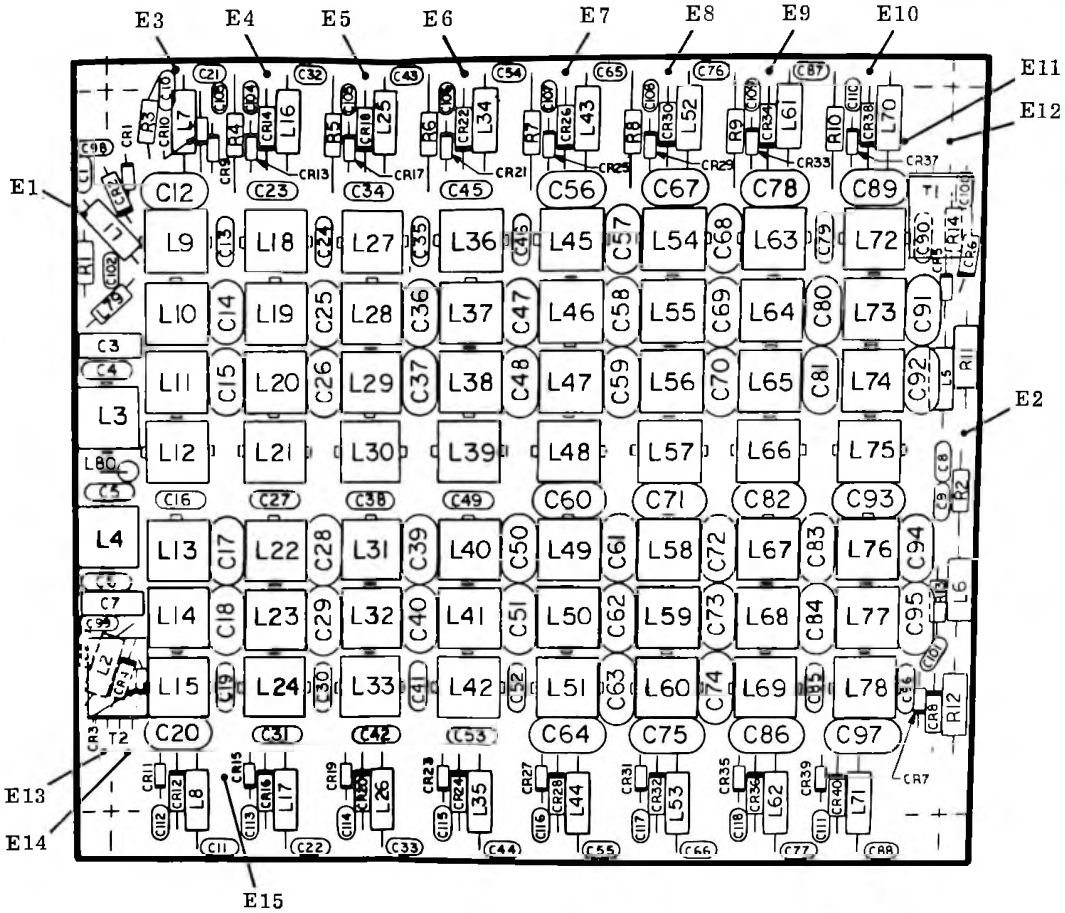

Figure 10. 1/2 Octave Filter PWB Assembly, Component Locations

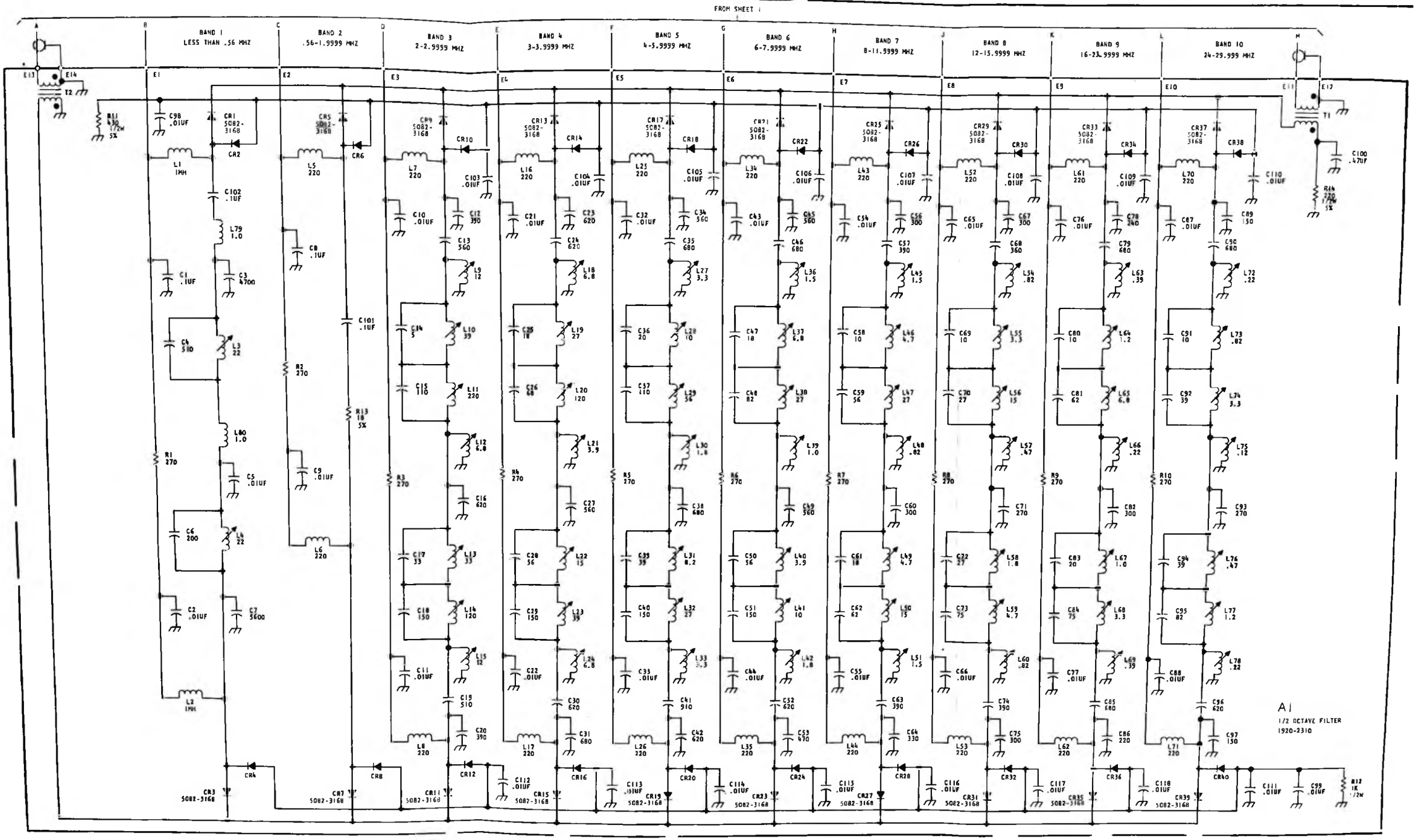

Figure 11. 1/2 Octave Filter PWB Assembly, Schematic Diagram

A2A5

UNIT INSTRUCTIONS

RF/IF ASSEMBLY

A2A5

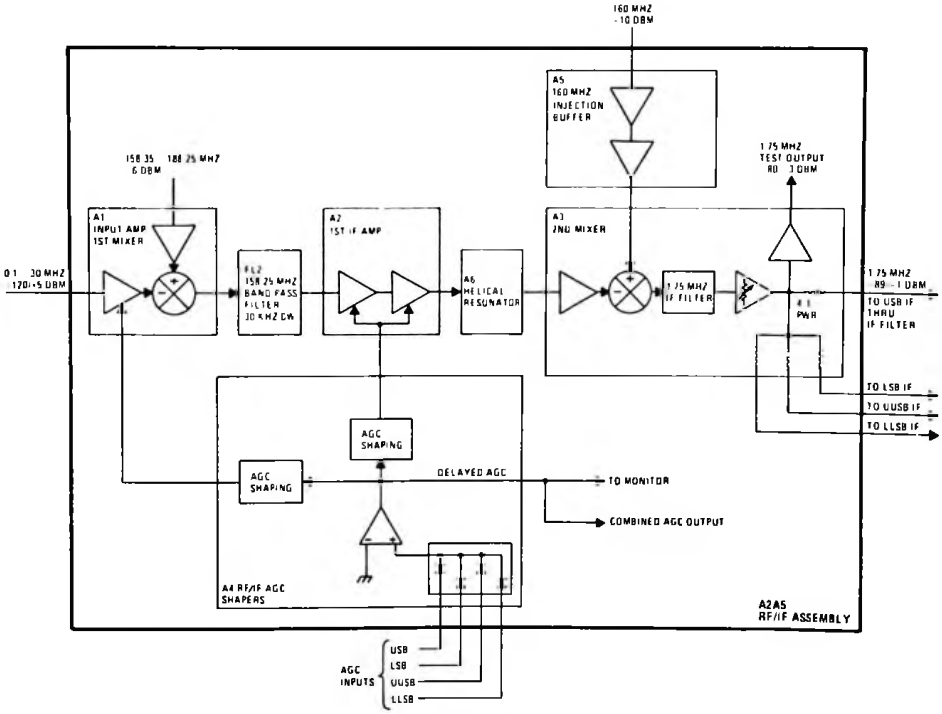

TABLE OF CONTENTS

A2A5

Paragraph		Page
1	General Description	1
2	Technical Characteristics	1
3	Semiconductor Complement	1
4	Circuit Description	1
4.1	Input Amplifier/First Mixer A1	1
4.2	First IF Amplifier A2A1	2
4.3	Second Mixer A3 and Injection Buffer A5	2
4.4	RF/IF AGC Shapers A4	2
5	Maintenance	3
5.1	Dynamic Range Adjustment	3
5.2	Maintenance Adjustment	3
5.2.1	1st Mixer Alignment	5
5.2.2	Helical Resonator Adjustment	5
5.2.3	2nd Mixer Assembly Adjustment	5
6	Parts List	5
7	Component Location and Schematic Diagrams	5

Table		
1	Parts List	6
2	Index of Manufacturers' Codes	15

Figure		
1	RF/IF AGC Adjustments, Equipment Setup and Interconnections	4
2	RF/IF Assembly, Component Locations	17
3	First IF Amplifier PWB, Component Locations	17
4	First IF Amplifier Assembly, Component Locations	17
5	Input Amplifier/First Mixer, Component Locations	17
6	RF/IF Assembly, Schematic Diagram	17
7	RF/IF AGC Shapers PWB, Component Locations	19
8	160 MHz Injection Buffer PWB, Component Locations	19
9	Second Mixer PWB, Component Locations	19

1. GENERAL DESCRIPTION

RF/IF Assembly A2A5 performs double frequency conversion and gain-controlled amplification of RF input signals. RF signals in the 0.1 to 30 MHz range are converted first to 158.25 MHz and then to the 1.75 MHz IF output frequency by two subtractive mixers. The 0.1 to 30 MHz input from Input Filter Assembly A2A4 is subtractively mixed with the 158.35 to 188.25 MHz synthesizer output in the 1st mixer to produce a 158.25 MHz 1st IF. Bandpass filter FL2 limits the 1st IF bandwidth to 30 KHz. The signal is subsequently amplified and gain-controlled in the 1st IF Amplifier. Shaped AGC voltages for control of the RF and 1st IF Amplifiers are provided by the RF/IF AGC Shapers in response to inputs from separate USB, LSB, UUSB and LLSB AGC detectors. Helical Resonator A6 provides additional rejection to unwanted signals and to the 1st LO feed-through at 161.75 MHz, in particular. The 158.25 MHz 1st IF is subtractively mixed with the fixed 160 MHz LO. Additional IF filtering is accomplished in the 2nd mixer PWB and the signal is power divided by four to provide separate ISB IF amplifier outputs. A 1.75 MHz IF test output at -80/-3 dBm is also provided on the assembly.

2. TECHNICAL CHARACTERISTICS

Weight:
2 pounds, 9.5 ounces (1.17 kilograms)

Dimensions:
5.29H x 5.8W x 2.31D (inches)
13.4H x 14.7W x 5.86D (cm)

Power Requirements:
+15Vdc
-15Vdc

Signal Inputs:
0.1 - 30 MHz, -120/+5 dBm
160 MHz, 0 dBm
158.35 - 188.25 MHz, -6 dBm

Signal Outputs:
1.75 MHz USB, -89/-14 dBm
1.75 MHz UUSB, -95/-20 dBm
1.75 MHz LSB, -95/-20 dBm
1.75 MHz LLSB, -95/-20 dBm
1.75 MHz TEST, -80/-3 dBm

3. SEMICONDUCTOR COMPLEMENT

REF DESIG	TYPE	DESCRIPTION
A2A5A1		
CR1	UM4001B	Diode, Pin
Q1	CP647	FET
Q2, Q3	U310	FET
Q4	2N5179	Transistor, NPN
Q5	2N5109	Transistor, NPN
Q6	2N2907A	Transistor, PNP
A2A5A2		
CR1,CR2	HP5082	Diode
Q1	2N5179	Transistor, NPN
Q2	2N5109	Transistor, NPN
A2A5A3		
Q1	2N5109	Transistor, NPN
Q2	U310	FET
Q3,Q4	2N2219	Transistor, NPN

4. CIRCUIT DESCRIPTION

Refer to figure 6. The RF/IF Assembly is made up of five separate circuit boards, A1 through A5, and two filters FL2 and Helical Resonator A6.

4.1 INPUT AMPLIFIER/FIRST MIXER A1

The RF input signal from Input Filter Assembly A2A4 enters Assembly A1 at P1-B and

terminates in toroid transformer T1. T1 transforms the source impedance of Low noise FET amplifier, Q1, to match the 50-ohm input impedance of the assembly. Q1 is gain-controlled by RF AGC voltage and shunt attenuator CR1 in the drain circuit. The AGC voltage appearing at the cathode of diode CR1 is adjusted to produce a dynamic range of 25 dB for the RF input amplifier. The synthesizer input at P1-E is amplified in the two-stage broad band amplifier consisting of Q4 and Q5. The 0.1-30 MHz RF input and the 158.35-188.25 synthesizer input are subtractively mixed in mixer MX1 to produce the 158.25 MHz 1st IF output. L5 and L6 are factory adjusted to optimize mixer balance and intermodulation characteristics and are not service adjustments. With no AGC action, the overall gain of the Input Amplifier/First Mixer stage is approximately +8 dB. T3 provides a 50-ohm output through FL2 to the 1st IF Amplifier. FL2 has a 40 kHz bandwidth centered at the 158.25 MHz 1st IF frequency.

4.2 FIRST IF AMPLIFIER A2A1

Assembly A2A1 is a two-stage transistor amplifier. Both stages are AGC controlled by the discrete 1st IF AGC voltage from the RF/IF AGC shapers. Q1 and Q2 introduce +9 dB gain each. With AGC control provided by CR1 and CR2, the stage has a total dynamic range of 25 dB. The maximum attenuation level is established by the adjustable IF AGC output from the RF/IF AGC shapers. There are no adjustments on Assembly A2A1. The 50-ohm 1st IF output to the A6 Helical Resonator has a dynamic range of 50 dB. The Helical Resonator functions as a bandpass filter that sharply attenuates the 1st LO feed-through at 161.75 MHz. The insertion loss of the Helical Resonator is approximately 8 dB.

4.3 SECOND MIXER A3 AND INJECTION BUFFER A5

The 158.25 MHz 1st IF input to the 2nd Mixer is subtractively mixed with the fixed 160 MHz from Assembly A2A7 to produce the final 1.75 MHz intermediate frequency. Q1 is fixed tuned to the 158.25 MHz 1st IF and introduces approximately +10 dB gain. Gain control is not used in this stage. The 160 MHz input from A2A7 is amplified and buffered in Q1 and Q2 on the separate Injection Buffer circuit board before being applied to mixer MX1 on the A3 circuit board. Mixing products are filtered out by the 1.75 MHz IF filter comprising L6, C10, C11, C12, C13 and L7. This filter is peaked for maximum 1.75 MHz IF output. The insertion loss for the filter is typically 5 dB. Q3 provides approximately 10 dB gain before the output is power-divided by four at the output. With the A2A4 Input Filter in place, R13 in the Q3 emitter cirucit is adjusted to provide an overall gain of 27 dB at USB IF output (P1-U). Note that a separate buffered IF Test Output is provided through Q4 for test purposes.

4.4 RF/IF AGC SHAPERS A4

RF-550 Receiver can have up to four IF amplifiers (USB, LSB, UUSB, and LLSB) developing separate AGC voltages (see A2A6A6, A2A6A7, A2A6A8, and A2A6A9). Both the RF amplifier and the 1st IF amplifier have dynamic ranges of 25 dB. The discrete AGC voltages developed in the separate IF amplifiers for USB, LSB, and optionally for UUSB and LLSB, are applied to a "greatest-of" circuit, which automatically selects the strongest signal as the gain control source for the RF/IF module. The "greatest-of" circuit consists of diodes CR6, CR7, CR8, CR9, and AR3. The high-

est AGC voltage present biases OFF the other diodes and effects the automatic selection. Q1 functions as an emitter follower to provide current gain to drive AGC shapers AR1 and AR2. The combined AGC output has a range of 0-9 Vdc, with 9V corresponding to maximum AGC attenuation. This level is applied to shapers consisting of operational amplifiers AR1 and AR2 and their associated components. AR2 output is adjustable at R15 to control the dynamic range of the RF input amplifier, and AR1 performs a similar function for the 1st IF amplifier. The R1 output is adjustable from approximately +2 to -9.5 Vdc, with the negative voltage corresponding to maximum attenuation. Similarly, the R15 output is adjustable from +2 to -5 Vdc.

5. MAINTENANCE

5.1 DYNAMIC RANGE ADJUSTMENT

The following procedure measures the overall performance of Assembly A2A5 and establishes the dynamic range of the RF and 1st IF amplifiers by controlling the ranges of their AGC systems. Figure 1 shows the equipment and interconnections required.

a. Set up equipment as in figure 1 and remove side cover from A2A5A4.

b. Remove Assembly A2A6A8 and connect RF millivoltmeter to A2A6A8-J3 connector on chassis. Use BNC-TO-SNAPON Adapter Plug from maintenance repair kit to mate with J3 connector. Make connection to the RF millivoltmeter using a BNC-TO-BNC coaxial cable and 50-ohm termination supplied with the RF millivoltmeter.

c. At the RF-550, select or verify the following switch positions: Power ON, AGC OFF, LOCAL control, and USB MODE.

d. Select a convenient operating frequency and, with signal generator adjusted to the same frequency, adjust output to a level of -50 dBm. The RF millivoltmeter should read -29 dBm (overall gain of +21 dB). Adjust R13 to obtain -29 dBm if necessary.

e. Connect VOM to read AGC voltage at A2A6A7-TP1 and adjust front panel RF GAIN control for an indication of +9 Vdc to ground at this point.

f. Short 1st IF AGC to ground at E1 on A2A5A4 using a short clip-lead or any convenient method that does not damage the connection at this point.

g. Increase signal generator output to -25 dBm and adjust A2A5A4R15, (RF AGC adjust potentiometer) for a reading of -29 dBm on the RF millivoltmeter.

h. Remove jumper from A2A5A4E1.

NOTE

The levels shown include the 4 dB attenuation of Input Filter Assembly A2A4.

i. The 1st IF AGC is adjusted for the same dynamic range (25 dB) as the RF AGC, and the test setup is the same. Adjust RF GAIN control for +9V AGC level at A2A6A7-TP1.

j. Increase signal level to 0 dBm. Adjust A2A5A4R1 (1st IF AGC adjust optentiometer) for reading of -29 dBm on RF millivoltmeter.

k. This completes dynamic range adjustment.

5.2 MAINTENANCE ADJUSTMENTS

The following adjustments should not be performed as routine maintenance procedures, but rather only when a failure indicates a definite requirement.

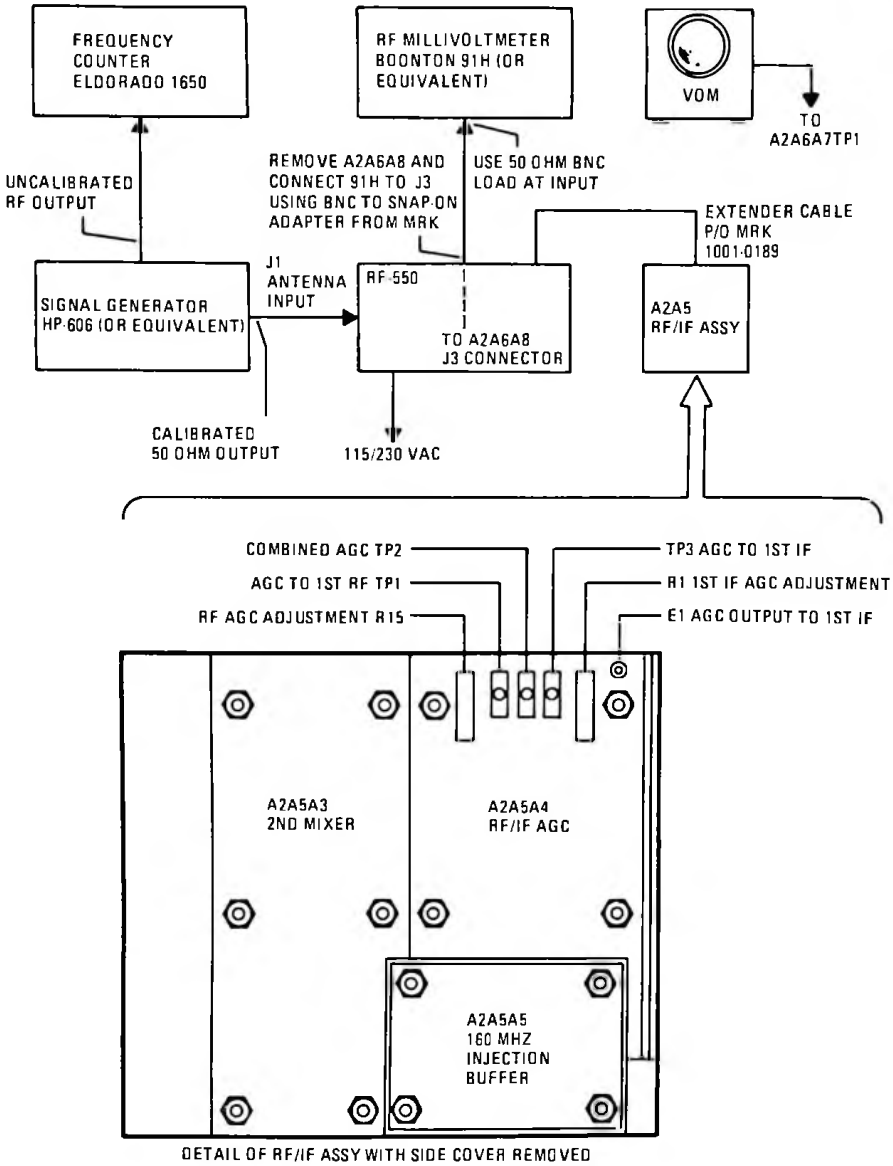

Figure 1. RF/IF AGC Adjustments, Equipment Setup and Interconnections

just adjust to max S-meter reading

5.2.1 1st Mixer Alignment

a. Remove side covers from A2A5 Assembly and install A2A5 on extender cable.

b. Disconnect coaxial cable from FL2E1 and E2. Connect spectrum analyzer by temporarily soldering to free end of cable.

c. Connect signal generator (HP-606) to antenna input connector on RF-550. Adjust RF-550 and HP-606 frequencies to 10.0000 MHz. Adjust HP-606 level to -36 dBm.

d. Adjust spectrum analyzer controls to obtain display shown.

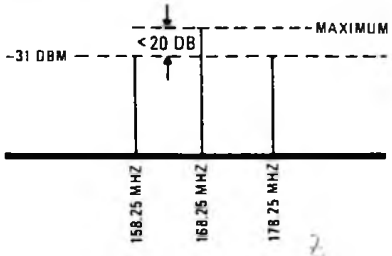

e. On A2A5A1 PWB, adjust L5, L6, and to peak signal at 158.25 MHz. Note the 168.25 MHz signal level. The 168.25 level represents 1st LO feedthru. LO feedthru should be no greater than 20 dB above the 158.25 MHz signal level.

f. After tuning, rotate RF GAIN control and verify that 25 dB attenuation range is attainable.

g. Disconnect spectrum analyzer and reconnect A2A5A1 PWB to A2A5FL2E1 and E2.

5.2.2 Helical Resonator Adjustment

a. Install RF/IF Assembly on extender cable.

b. Connect signal generator (HP-606) to antenna input connector on RF-550. Adjust RF-550 and HP-606 frequencies to 10.0000 MHz. Adjust HP-606 level to -50 dBm. At RF-550, set AGC off and RF GAIN fully clockwise.

c. Connect an RF millivoltmeter (Boonton 91H) with a 50-ohm termination at A2J2, the IF test output on the RF-550.

d. Adjust A2A5A6C1 thru C3 (located on bottom of assembly A2A5), for a peak indication on RF millivoltmeter. See figure 2.

5.2.3 2nd Mixer Assembly Adjustment

a. Set up as in paragraph 5.2.2 a, b, and c.

b. Tune L8 and L9 on A2A5A3 Assembly for peak indication on RF millivoltmeter.

c. This completes all maintenance adjustments. Return equipment to normal operating configuration.

6. PARTS LIST

Table 1 contains parts list information for RF/IF Amplifier Assembly A2A5. Table 2 lists related manufacturers' code information.

7. COMPONENT LOCATION AND SCHEMATIC DIAGRAMS

Figures 2 through 9 are component location and schematic diagrams for the RF/IF Assembly.

NOTICE

In some instances, the Integrated Circuit (IC) component types listed herein differ from those of the actual component. These components are physically and electronically interchangeable. Either type can be used for replacement purposes.

REF DESIG.	NOTES	NAME AND DESCRIPTION	FIG. NO.
A2A5		RF/IF Module Assembly; MFR 14304, PN 1920-5250	
C1 to C7		Capacitor, Feed-Thru, 1000 pF, ±20%, 500V; MFR 72982, PN 2425-003-W5U0-102AA	
C8, C9		Capacitor, Fixed, Ceramic, 0.47 uF, ±20%, 50V; MFR 14304, PN C11-0005-474	
C10, C11		Capacitor, Fixed, Ceramic, 0.1 uF, ±20%, 50V; MFR 14304 PN C11-0005-104	
FL1		Filter Plate Assembly; MFR 14304, PN 1920-1270	
FL1C1 to FL1C14		Capacitor, Feed-Thru, 0.00175 uF, 250V; MFR 72982, PN 1214-001	
FL1L1 to FL1L4		Inductor, Fixed, RF, 1 uH MIL Type LT4K081	
FL2		Filter, Crystal, 158.250 MHz; MFR 14304 PN 1920-0602	
MP1 to MP8		Connector Pin, Coaxial; MFR 81312, PN 100-8001S95	
MP9 to MP17		Connector Pin, Male; MIL Type MS17803-16-20	
P1		Connector, 20 Pin; MFR 81312 PN MRAC20PN7	
A2A5A1		Input Amp/First Mixer PWB Assembly; MFR 14304 PN 1920-5110	
C1 to C4		Capacitor, Fixed, Ceramic, 0.47 uF, ±20%, 50V; PN C11-0005-474	

REF DESIG.	NOTES	NAME AND DESCRIPTION	FIG. NO.
C5		Capacitor, Fixed, Ceramic, 0.1 uF, ±20%, 50V; PN C11-0005-104	
C6		Capacitor, Fixed, Tantalum, 1 uF, 35V; PN C-3100	
C7		Capacitor, Fixed, Ceramic 0.1 uF, ±20%, 50V; PN C11-0005-104	
C8		Capacitor, Fixed, Tantalum, 1 uF, 35V; PN C-3100	
C9, C10		Capacitor, Fixed, Mica, 10 pF, 500V; PN CM04CD100DJ3	
C11, C12		Capacitor, Fixed, Ceramic, 12 pF; PN C-6813	
C13		Capacitor, Fixed, Mica, 22 pF, 500V; PN CM04ED22J03	
C14, C15		Capacitor, Fixed, Ceramic, 0.001 uF, ±20%, 50V; PN C11-0005-102	
C16, C17		Capacitor, Fixed, Mica, 3.9 pF; PN C-4735	
C18		Capacitor, Fixed, Ceramic, 0.001 uF, ±20%, 50V; PN C11-0005-102	
C19		Capacitor, Fixed, Tantalum, 1 uF, 35V; PN C-3100	
C20, C21		Capacitor, Fixed, Mica, 10 pF, 500V; PN CM04CD100DJ3	
C22 to C26		Capacitor, Fixed, Ceramic, 0.001 uF, ±20%, 50V; PN C11-0005-102	
C27		Capacitor, Fixed, Tantalum, 1 uF, 35V; PN C-3100	

REF DESIG.	NOTES	NAME AND DESCRIPTION	FIG. NO.
C28, C29		Capacitor, Fixed, Ceramic, 0.001 uF, ±20%, 50V; PN C11-0005-102	
C30		Capacitor, Fixed, Mica, 0.1 pF, 50V; PN CM04CD100DJ3	
C31		Capacitor, Fixed, Ceramic, 0.001 uF, ±20%, 50V; PN C11-0005-102	
C32		Capacitor, Fixed, Tantalum, 1 uF, 35V; PN C-3100	
C33		Capacitor, Fixed, Ceramic, 0.47 uF, ±20%, 50V; PN C11-0005-474	
C34, C35		Capacitor, Fixed, Ceramic, 0.001 uF, ±20%, 50V; PN C11-0005-102	
C36		Capacitor, Fixed, Mica, 3 pF, ±20%, 500V; PN CD6CD030C03	
C37		Capacitor, Fixed, Ceramic, 3.3 pF, ±20%, 50V; PN C-6806	
CR1		Diode, Pin; MFR 12969, PN D12-0005-001	
L1 to L3		Inductor, Fixed, RF, 1000 uH; PN MS90539-15	
L4		Inductor, Fixed, RF, 1000 uH; PN MS75085-19	
L5, L6		Inductor, Variable, 0.15 uH, NOM; PN L60-0115-305	
L7		Inductor, Fixed, RF, 0.1 uH; PN MS75083-1	
L8		Inductor, Fixed, RF, 0.1 uH; PN MS75083-1	
L9 to L11		Inductor, Fixed, RF 1.0 uH; PN MS75083-11	

REF DESIG.	NOTES	NAME AND DESCRIPTION	FIG. NO.
L12		Inductor, Fixed, RF, 1.0 uH PN 1920-5605	
L13		Inductor, Variable, 0.15 uH, NOM; PN L60-0115-305	
MX1		Mixer; MFR 91925 PN SRA-1H	
Q1		Transistor, FET; MFR 12498 PN CP647	
Q2, Q3		Transistor, FET; MFR 17856 PN U310	
Q4		Transistor, NPN, Type 2N5179 PN 2N5179	
Q5		Transistor, NPN, Type 2N5109; PN 2N5109	
Q6		Transistor, PNP, Type 2N2907A; PN 2N2907A	
R1		Resistor, Fixed, Composition, 150 ohms, ±5%, 1/2W; MIL Type PN RCR20G151JM	
R2		Resistor, Fixed, Composition, 51 ohms, ±5%, 1/4W; MIL Type PN RCR07G510JM	
R3, R4		Resistor, Fixed, Composition, 100 ohms, ±5%, 1/4W; MIL Type PN RCR07G101JM	
R5		Not Used	
R6		Resistor, Fixed, Composition, 51 ohms, ±5%, 1/4W; MIL Type, PN RCR07G471JM	
R7		Resistor, Fixed, Composition, 470 ohms, ±5%, 1/4W;MIL Type, PN RCR07G471JM	

REF DESIG.	NOTES	NAME AND DESCRIPTION	FIG. NO.
R8		Resistor, Fixed, Composition, 2K ohms, ±5%, 1/4W; MIL Type, PN RCR07G202JM	
R9		Resistor, Fixed, Composition, 12K ohms, ±5%, 1/4W; MIL Type, PN RCR07G123JM	
R10		Resistor, Fixed, Composition, 4.7 ohms, ±5%, 1/4W; MIL Type PN RCR07G4R7JM	
R11		Resistor, Fixed, Composition, 100 ohms, ±5%, 1/4W; MIL Type PN RCR07G101JM	
R12		Resistor, Fixed, Composition, 5.6K ohms, ± 5%, 1/4W; MIL Type, PN RCR07G562JM	
R13		Resistor, Fixed, Composition, 1.8K ohms, ±5%, 1/4W; MIL Type, PN RCR07G182JM	
R14		Resistor, Fixed, Composition, 68 ohms, ±5%, 1/4W; MIL Type PN RCR07G680JM	
R15		Resistor, 0 ohms; PN MP-1142	
T1		Transformer, Toroidal; PN 1920-5602	
T2, T3		Transformer, Toroidal; PN 1920-5601	
T4		Transformer, Toroidal; PN 1920-5603	

REF DESIG.	NOTES	NAME AND DESCRIPTION	FIG. NO.

REF DESIG.	NOTES	NAME AND DESCRIPTION	FIG. NO.
A2A5A2		First IF Amplifier PWB Assembly; MFR 14304, PN 1920-5120	
C1 to C13		Capacitor, Fixed, Ceramic, 1000 pF, ±20%, 50V; PN C11-0005-102	
C14		Capacitor, Fixed, Ceramic, 3.3 pF, ±20%, 50V; PN C-6806	
C15		Capacitor, Fixed, Ceramic, 1000 pF, ±20%, 50V; PN C11-0005-102	
CR1,CR2		Diode; MFR 28480, PN HP5082-3081	
L1, L2		Inductor, Fixed, RF, 1 uH, 10%; PN MS75083-13	
L3		Inductor, Fixed, RF, .22 uH, 10%; PN MS75083-5	
L4, L5		Inductor, Fixed, RF, 1 uH, 10%; PN MS75083-13	
L6		Inductor, Fixed, RF, 0.22 uH, 10%; PN MS75083-5	
Q1		Transistor, NPN, Type 2N5179; PN 2N5179	
Q2		Transistor, NPN, Type 2N5109; PN 2N5109	
R1		Resistor, Fixed, Composition, 6.8K ohms, 5%, 1/4W; MIL Type, PN RCR07G82JM	
R2		Resistor, Fixed, Composition, 470 ohms, 5% 1/4W; MIL Type, PN RCR07G471JM	
R3		Resistor, Fixed, Composition, 6.8K ohms, 5%, 1/4W; MIL Type, PN RCR07G682JM	

REF DESIG.	NOTES	NAME AND DESCRIPTION	FIG. NO.
R4		Resistor, Fixed, Composition, 4.7 ohsm, 5%, 1/4W; MIL Type, PN RCR07G4R7JM	
R5		Resistor, Fixed, Composition, 680 ohms, 5%, 1/4W, MIL Type, PN RCR07G681JM	
R6		Resistor, Fixed, Composition, 11K ohms, 5%, 1/4W; MIL Type, PN RCR07G113JM	
R7		Resistor, Fixed, Composition, 130 ohms, 5%, 1/4W; MIL Type, PN RCR07G131JM	
R8		Resistor, Fixed, Composition, 3.6K ohms, 5%, 1/4W; MIL Type, PN RCR07G262JM	
R9		Resistor, Fixed, Composition, 18 ohms, 5%, 1/4W; MIL Type PN RCR07G180JM	
R10		Resistor, Fixed, Composition, 130 ohms, 5%, 1/4W; MIL Type PN RCR07G131JM	
T1, T2		Transformer; PN 1976-3824	

REF DESIG.	NOTES	NAME AND DESCRIPTION	FIG. NO.
A2A5A3		Second Mixer PWB Assembly; MFR 14304 PN 1920-5130	
C1 to C6		Capacitor, Fixed, Ceramic, 0.001 uF, ±20%, 50V, PN C11-0005-102	
C7 to C9		Capacitor, Fixed, Ceramic 0.1 uF, ±20% PN C11-0005-104	
C10		Capacitor, Fixed, Mica, 270 pF, 300V; PN CM04FC271J03	
C11		Capacitor, Fixed, Mica, 82 pF, 500V; PN CM04ED820J03	
C12		Capacitor, Fixed, Mica, 2000 pF, 500V; PN CM06FD202J03	
C13		Capacitor, Fixed, Mica, 82 pF, 500V; PN CM04ED820J03	
C14		Capacitor, Fixed, Ceramic 0.1 uF, ±20%, 50V, PN C11-0005-104	
C15		Capacitor, Fixed, Mica, 560 pF PN CM05FP561J03	
C16 to C18		Capacitor, Fixed, Ceramic, 0.1 uF, ±20%, 50V; PN C11-0005-104	
C19		Capacitor, Fixed, Mica 390 pF, 500V; PN CM05FD391J03	
C20, C21		Capacitor, Fixed, Ceramic, 0.1 uF, ±20%, 50V; PN C11-0005-104	
L1		Inductor, Fixed, RF, 0.22 uH, ±10%; PN MS75083-5	
L2		Inductor, Fixed, RF, 1 uH, ±10%; PN MS75083-13	
L3		Inductor, Fixed, RF, 1000 uH, ±10%; PN MS75085-19	

REF DESIG.	NOTES	NAME AND DESCRIPTION	FIG. NO.
L4		Inductor, Fixed, RF, 39 uH, ±10%; PN MS75085-2	
L5		Inductor, Fixed, RF, 1000 uH; PN MS75085-19	
L6, L7		Inductor, Variable, 100 uH, PN L11-0004-037	
L8		Inductor, Fixed, 0.15 uH; PN MS75084-14	
L9, L10		Inductor, Fixed, 1000 uH; PN MS75085-19	
L11		Inductor, Fixed, 22 uH; PN MS75084-16	
MX1		Mixer, PN SRA-1H	
Q1		Transistor, NPN; Type 2N5109; PN 2N5109	
Q2		Transistor, FET, U310 PN U310, MFR 17856	
Q3, Q4		Transistor, NPN, Type 2N2219; PN 2N2219	
R1		Resistor, Fixed, Composition, 5.6K ohms, 5%, 1/4W; MIL Type, PN RCR07G562JM	
R2		Resistor, Fixed, Composition, 220 ohms, 5%, 1/4W; MIL Type RCR07G221JM	
R3		Resistor, Fixed, Composition, 1.8K ohms, 5%, 1/4W; MIL Type RCR07G182JM	
R4		Resistor, Fixed, Composition, 10 ohms, 5%, 1/4W; MIL Type RCR07G100JM	
R5		Resistor, Fixed, Composition, 130 ohms, 5%, 1/4W; MIL Type RCR07G131JM	
R6		Resistor, Fixed, Composition, 110 ohms, 5%, 1/4W; MIL Type RCR07G111JM	

REF DESIG.	NOTES	NAME AND DESCRIPTION	FIG. NO.
R7		Resistor, Fixed, Composition, 3.3K ohms, 5%, 1/4W; MIL Type RCR07G332JM	
R8		Resistor, Fixed Composition, 68K ohms, 5%, 1/4W; MIL Type RCR07G680JM	
R9		Resistor, Fixed, Composition, 10K ohms, 5%, 1/4W; MIL Type RCR07G103JM	
R10		Resistor, Fixed, Composition, 1K ohms, 5%, 1/4W; MIL Type RCR07G102JM	
R11		Resistor, Fixed, Composition, 5.1K ohms, 5%, 1/4W, MIL Type RCR07G512JM	
R12		Resistor, Fixed, Composition, 4.7K ohms, 5%, 1/4W, MIL Type RCR07G4R7JM	
R13		Resistor, Variable, 100 ohm PN 3299X-1-101	
R14		Resistor, Fixed, Composition, 120 ohms, 5%, 1/4W; MIL Type RCR07G121JM	
R15		Resistor, Fixed, Composition, 510 ohms, 5%, 1/4W; MIL Type RCR07G511JM	
R16		Resistor, Fixed, Composition, 100 ohms, 5%, 1/4W; MIL Type RCR07G101JM	
R17		Resistor, Fixed, Composition, 5.6 ohms, 5%, 1/4W; MIL Type RCRG5R6JM	
R18		Resistor, Fixed, Composition, 390 ohms, 5%, 1/4W; MIL Type RCR07G391JM	

REF DESIG.	NOTES	NAME AND DESCRIPTION	FIG. NO.
R19 to R21		Resistor, Fixed, Composition, 27 ohms, 5%, 1/4W, MIL Type RCR07G270JM	
R22		Resistor, Fixed, Composition, 3.9 ohms, 5%, 1/4W; MIL Type RCR07G392JM	
R23		Resistor, Fixed, Composition, 1K ohms, 5%, 1/4W; MIL Type RCR07G102JM	
R24		Resistor, Fixed, Composition, 3.9K ohms, 5%, 1/4W; MIL Type RCR07G392JM	
R25		Resistor, Fixed, Composition, 12 ohms, 5%, 1/4W; MIL Type RCR07G120JM	
R26		Resistor, Fixed, Composition, 510 ohms, 5%, 1/4W; MIL Type RCR07G511JM	
R27		Resistor, Fixed, Composition, 150 ohms, 5%, 1/4W; MIL Type RCR07G151JM	
R28		Resistor, Fixed, Composition, 360 ohms, 5%, 1/4W; MIL Type RCR07G360JM	
R29		Resistor, Fixed, Composition, 150 ohms, 5%, 1/4W; MIL Type RCR07G151JM	
R30, R31		Resistor, Fixed, Composition, 51 ohms, 5%, 1/4W; MIL Type RCR07G510JM	
T1, T2		Transformer PN 1976-3824	
T3		Transformer, 5 Turn Balun, PN 1920-5604	

REF DESIG.	NOTES	NAME AND DESCRIPTION	FIG. NO.
A2A5A4		RF/IF AGC Shapers PWB Assembly; MFR 14304, PN 1920-2140	
AR1 to AR3		Integrated Circuit; MFR 14304, Type 741 PN D50-0001-003	
C1 to C3		Capacitor, Fixed, Ceramic 0.001 uF, ±20%, 50V; MFR 14304 PN C11-0005-102	
C4		Capacitor, Fixed, Tantalum, 1.0 uF, ±20%, 20V; MFR 12954 PN D1R0GSA20M	
C5, C6		Capacitor, Fixed, Ceramic 0.001 uF, ±20%, 50V; MFR 14304 PN C11-0005-102	
C7		Capacitor, Fixed, Ceramic, 0.1 uF, ±20%, 50V; MFR 14304 PN C11-0005-104	
CR1 to CR9		Diode, Type 1N3064	
Q1		Transistor, NPN; Type 2N2222	
R1		Resistor, Variable, 10K; MFR 14304 PN R30-0001-103	
R2		Resistor, Fixed, Film, 1K, ±2%, 1/4W; MIL Type RL07S102G	
R3		Resistor, Fixed, Composition, 10K, ±5%, 1/4W; MIL Type RCR07G103JM	
R4, R5		Resistor, Fixed, Film, 3.3K, ±2%, 1/4W; MIL Type RL07S332G	
R6		Resistor, Fixed, Film, 15K, ±2%, 1/4W; MIL Type RL07S153G	
R7		Resistor, Fixed, Film, 3.9K, ±2%, 1/4W; MIL Type RL07S392G	

REF DESIG.	NOTES	NAME AND DESCRIPTION	FIG. NO.
R8		Resistor, Fixed, Film, 1.5K, ±2%, 1/4W; MIL Type RL07S472G	
R9		Resistor, Fixed, Film, 4.7K, ±2%, 1/4W; MIL Type RL07S472G	
R10		Resistor, Fixed, Film, 10K, ±2%, 1/4W; MIL Type RL07S103G	
R11		Resistor, Fixed, Film, 1.2K, ±2%, 1/4W; MIL Type FL07S122G	
R12 to R14		Resistor, Fixed, Composition, 10K, ±5%, 1/4W; MIL Type RCR07G103JM	
R15		Resistor, Variable, 10K, MFR 14304 PN R30-0001-103	
R16		Resistor, Fixed, Film, 1K, ±2%, 1/4W; MIL Type FL07S102G	
R17		Resistor, Fixed, Film 3.3K, ±2%, 1/4W; MIL Type RL07S332G	
R18		Resistor, Fixed, Film, 12K, ±2%, 1/4W; MIL Type RL07S123G	
R19		Resistor, Fixed, Film, 15K ±2%, 1/4W; MIL Type FL07S153G	
R20		Resistor, Fixed, Film, 5.6K, ±2%, 1/4W; MIL Type RL07S562G	
R21		Resistor, Fixed, Film, 270 ohms, ±2%, 1/4W; MIL Type RL07S271G	
R22		Resistor, Fixed, Film, 1.2K, ±2%, 1/4W; MIL Type RL07S122G	
R23		Resistor, Fixed, Film, 3K, ±2%, 1/4W; MIL Type RL07S302G	
R24		Resistor, Fixed, Film, 10K, ±2%, 1/4W; MIL Type RL07S103G	

REF DESIG.	NOTES	NAME AND DESCRIPTION	FIG. NO.
R25		Resistor, Fixed, Film, 560 ohms, ±2%, 1/4W; MIL Type FL07S561G	
R26		Resistor, Fixed, Composition, 2.2K, ±5%, 1/4W; MIL Type RCR07G222JM	
R27		Resistor, Fixed, Composition, 100 ohms, ±5%, 1/4W; MIL Type RCR07G101JM	
R28		Resistor, Fixed, Composition, 1K, ±5%, 1/4W; MIL Type RCR07G102JM	
R29		Resistor, Fixed, Composition, 10K, ±5%, 1/4W; MIL Type RCR07G103JM	
R30		Resistor, Fixed, Composition, 100K, ±5%, 1/4W, MIL Type RCR07G104JM	
R31		Resistor, Fixed, Film, 680 ohms, ±2%, 1/4W, MIL Type, RL07G104JM	
R32		Resistor, Fixed, Composition, 10K, ±5%, 1/4W, MIL Type RCR07G103JM	
TP1		Jack, Test Point, PC Board, Brown; MFR 14304, PN J60-0001-008	
TP2		Jack, Test Point, PC Board, Red; MFR 14304, PN J60-0001-002	
TP3		Jack, Test Point, PC Board, Orange; MFR 14304, PN J60-0001-006	
A2A5A5		160 Hz Injection Buffers PWB Assembly; MFR 14304, PN 1920-2150	
C1 to C4		Capacitor, Fixed, Ceramic, 0.001 uF, ±20%, 50V; MFR 14304 PN C11-0005-102	

REF DESIG.	NOTES	NAME AND DESCRIPTION	FIG. NO.
C5		Capacitor, Fixed, Mica, 270 pF, ±5%, 500V; MIL Type CM05FD271J03	
C6 to C9		Capacitor, Fixed, Ceramic, 0.001 uF, ±20%, 50V; MFR 14304, PN C11-0005-102	
C10		Capacitor, Fixed, Mica, 10 pF, ±5%, 500V; MIL Type CM04CD100J03	
C11		Capacitor, Fixed, Ceramic, 0.001 uF, ±20%, 50V; MFR 14304, PN C11-0005-102	
L1 to L3		Inductor, Fixed, RF, 1 uH; MIL Type LT4K351M1N	
L4		Inductor, Fixed, RF, 0.15 uH; MIL Type LT4K341M1N	
L5		Not Used	
L6		Inductor, Fixed, RF, MFR 14304 PN 1920-0626	
L7		Inductor, Fixed, RF, 1 uH; MIL Type LT4351M1N	
Q1		Transistor, NPN; Type 2N5179	
Q2		Transistor, NPN, Type 2N5109	
R1, R2		Resistor, Fixed, Composition, 5.6K, ±5%, 1/4W; MIL Type RCR07G562JM	
R3		Resistor, Fixed, Composition, 680 ohms, ±5%, 1/2W; MIL Type RCR20G681JM	
R4		Resistor, Fixed, Composition, 10 ohms, ±5%, 1/4W; MIL Type RCR07G100JM	

REF DESIG.	NOTES	NAME AND DESCRIPTION	FIG. NO.
R5		Resistor, Fixed, Composition, 680 ohms, ±5%, 1/2W; MIL Type RCR20G681JM	
R6		Resistor, Fixed Composition, 560 ohms, ±10%, 1/4W; MIL Type RCR07G561JM	
A2A5A6		Helical Resonator Assy; MFR 14304, PN 1920-1260	
C1 to C3		Capacitive Tuning Screw, MFR 91293, PN JMC6928	
J1, J2		Connector, 50 ohms, MFR 98291, PN 55-037-0000	
L1		Not Used	
L2 to L3		Coil, Helical Resonator; MFR 14304, PN 1920-1265	

REF DESIG.	NOTES	NAME AND DESCRIPTION	FIG. NO.

TABLE 2. INDEX OF MANUFACTURERS' CODES

MFR CODE	MFR NAME AND ADDRESS
04072	Bell Industries, Inc. Miller J. W. Div. Components Div. P.O. Box 5825 19070 Reyes Avenue Compton, California 90224
12498	Teledyne Crystalonics 147 Sherman Street Cambridge, Massachusetts 02140
12954	Dickson Electronics Corp. 8700 E. Thomas Road P.O. Box 1390 Scottsdale, Arizona 85252
12969	Unitrode Corp. 580 Pleasant Street Watertown, Massachusetts 02172
14304	Harris Corporation RF Communications Division 1680 University Avenue Rochester, New York 14610
17856	Siliconix, Inc. 2201 Laurelwood Road Santa Clara, California 95054
28480	Hewlett-Packard Company Corporate Hq. 1501 Page Mill Road Palo Alto, California 94304
71279	Cambridge Thermionic Corporation 445 Concord Avenue Cambridge, Massachusetts 02139
72982	Erie Technological Products, Inc. 644 W. 12th Street Erie, Pennsylvania 16512
73899	JFD Electronics 15th at 62nd Street Brooklyn, New York 11219

TABLE 2 INDEX OF MANUFACTURERS' CODES (Cont)

MFR CODE	MFR NAME AND ADDRESS
80294	Bourns, Inc. Instrument Division 6135 Magnolia Avenue Riverside, California 92506
81312	Winchester Electronics Division Litton Industries, Inc. Main Street and Hillside Avenue Oakville, Connecticut 06779
91293	Johanson Mfg. Co. P.O. Box 329 Boonton, New Jersey 07005
91925	Microcircuits Lab CO. RT1 Box 518 New Buffalo, Mississippi 49117
98291	Scalectro Corporation 225 Hoyt Mamaroneck, New York 10544

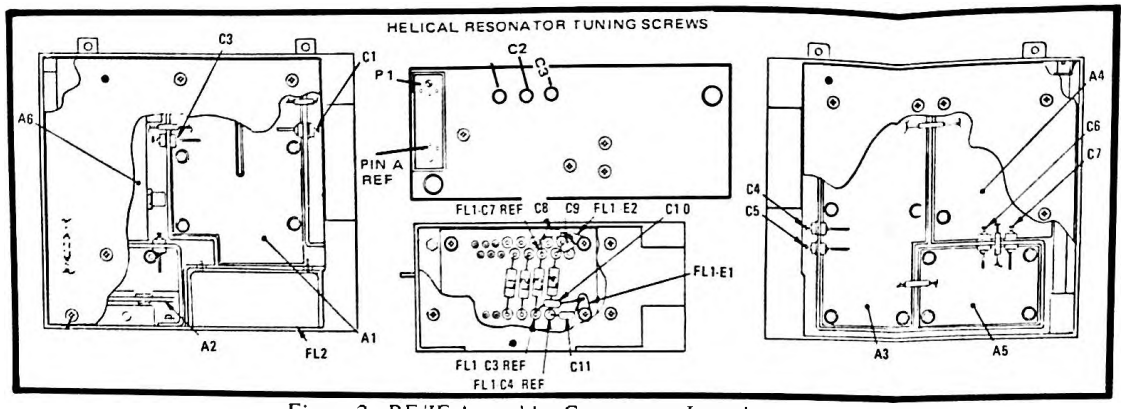

Figure 2. RF/IF Assembly, Component Locations

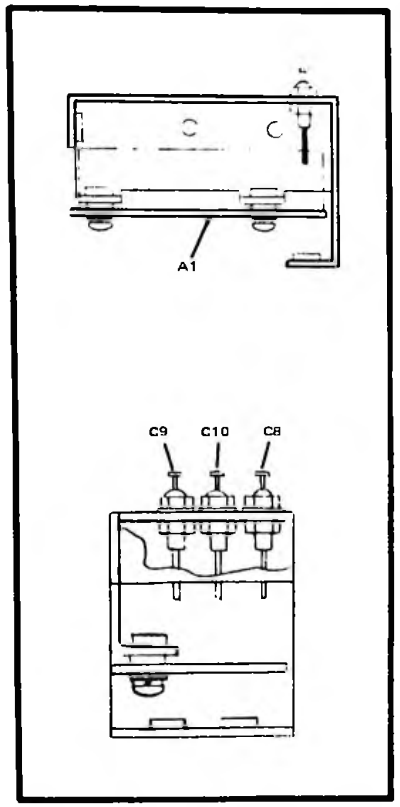

Figure 4. First IF Amplifier Assembly Component Locations

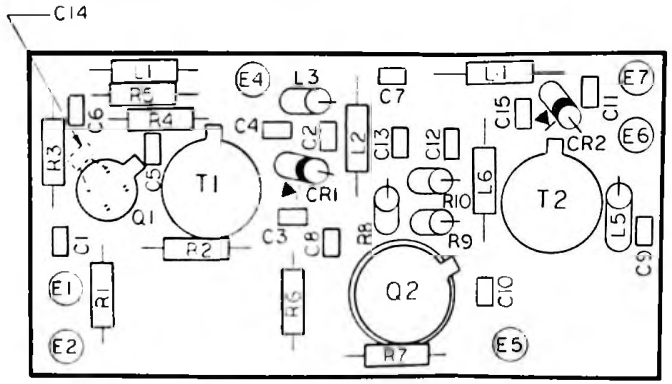

A2A1

Figure 3. First IF Amplifier PWB, Component Locations

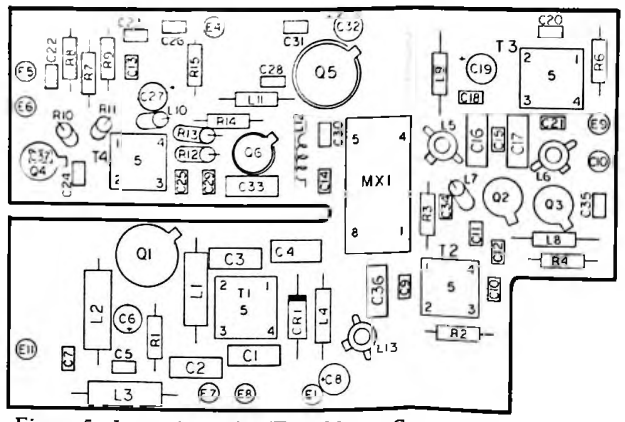

A2A5A1

Figure 5. Input Amplifier/First Mixer, Component Locations

NOTES:

1. PREFIX ALL REFERENCE DESIGNATIONS W
2. UNLESS OTHERWISE SPECIFIED:
   A. ALL DIODES ARE 1N3064.
   B. ALL RESISTANCES ARE IN OHMS, 1/4
   C. ALL CAPACITANCES ARE IN MICROF
   D. ALL INDUCTANCES ARE IN MICROHE
3. IN TWO CHANNEL RECEIVERS, UNUSED DI IN 51-OHMS. THEY ARE R30 AND R31, ON T

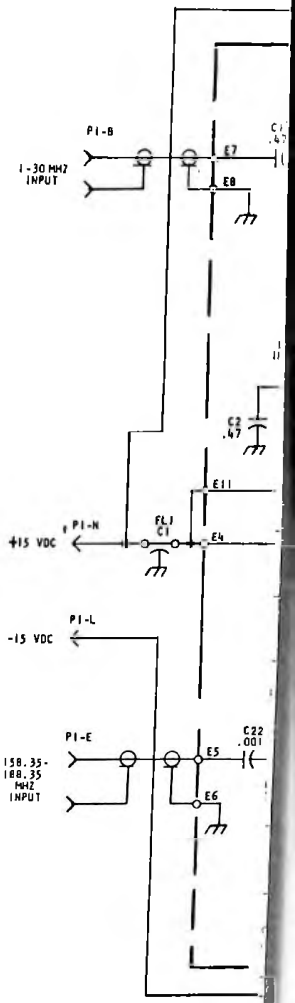

NOTES:

1. PREFIX ALL REFERENCE DESIGNATIONS WITH A2A5.
2. UNLESS OTHERWISE SPECIFIED:
   A. ALL DIODES ARE 1N3064.
   B. ALL RESISTANCES ARE IN OHMS, 1/4W
   C. ALL CAPACITANCES ARE IN MICROFARADS.
   D. ALL INDUCTANCES ARE IN MICROHENRIES.
3. IN TWO CHANNEL RECEIVERS, UNUSED OUTPUTS ARE TERMINATED IN 51-OHMS. THEY ARE R30 AND R31, ON THE 1920-5130 ASSY.

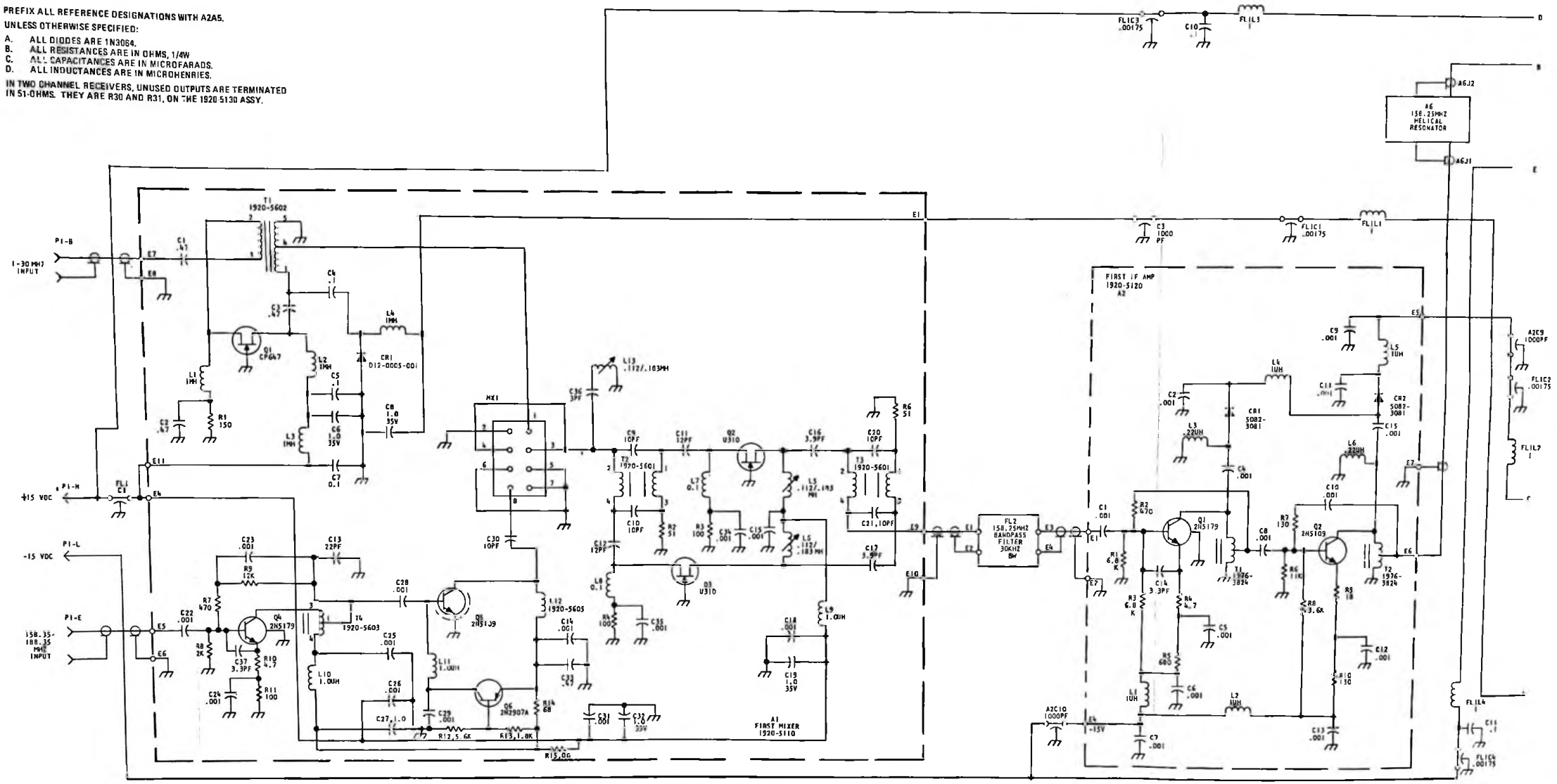

Figure 6. RF/IF Assembly, Schematic Diagram (Sheet 1 of 2)

A2A5A4

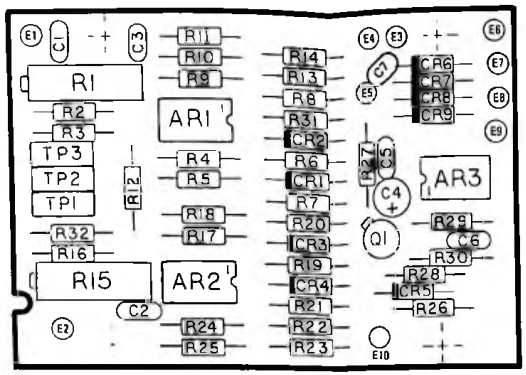

Figure 7. RF/IF AGC Shapers PWB, Component Locations

A2A5A5

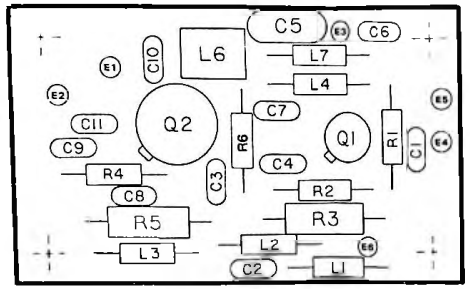

Figure 8. 160 MHz Injection Buffer PWB, Component Locations

NOTES:

1. Prefix all reference designations with A2A5
2. Unless otherwise specified:
   A. All diodes are 1N3064
   B. All resistances are in ohms, $\frac{1}{4}$W, $\pm$10%
   C. All capacitances are in microfarads
   D. All inductances are in microhenries
3. R26 and R27 deleted from this assembly in 1920-1250-2 version (used in 4 ISB Receivers - RF-562 Option).
4. In two channel receivers, unused outputs are terminated in 51-ohms.

A2A5A3

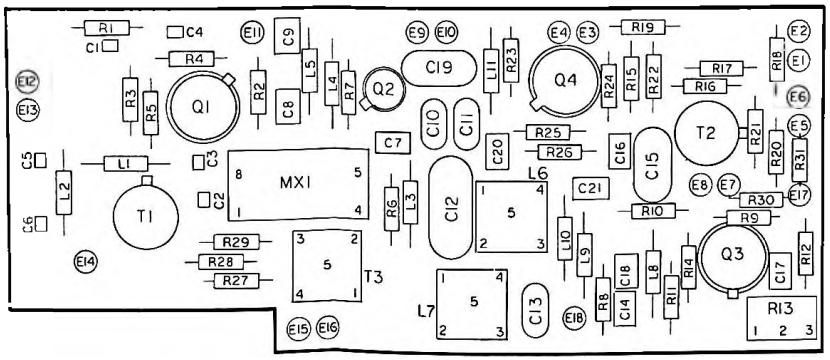

Figure 9. Second Mixer PWB, Component Locations

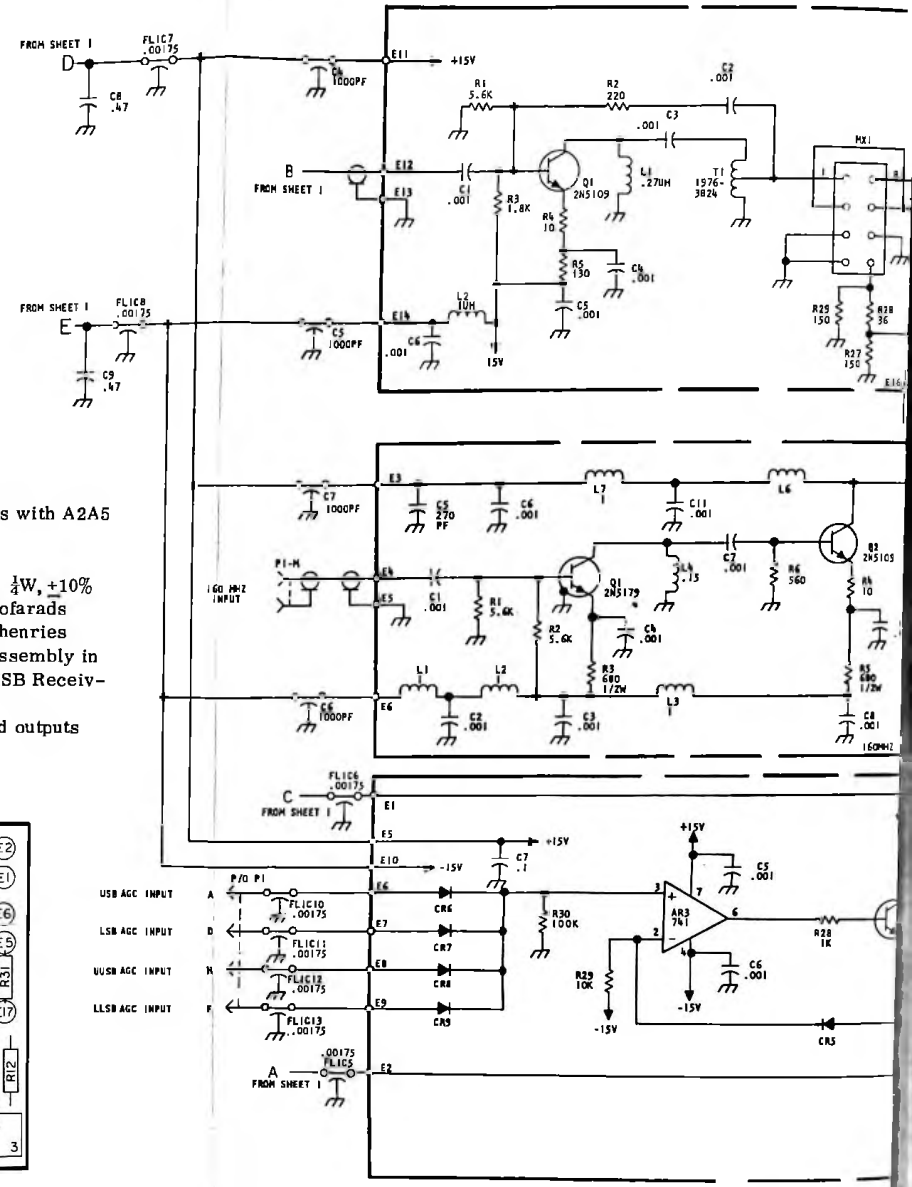

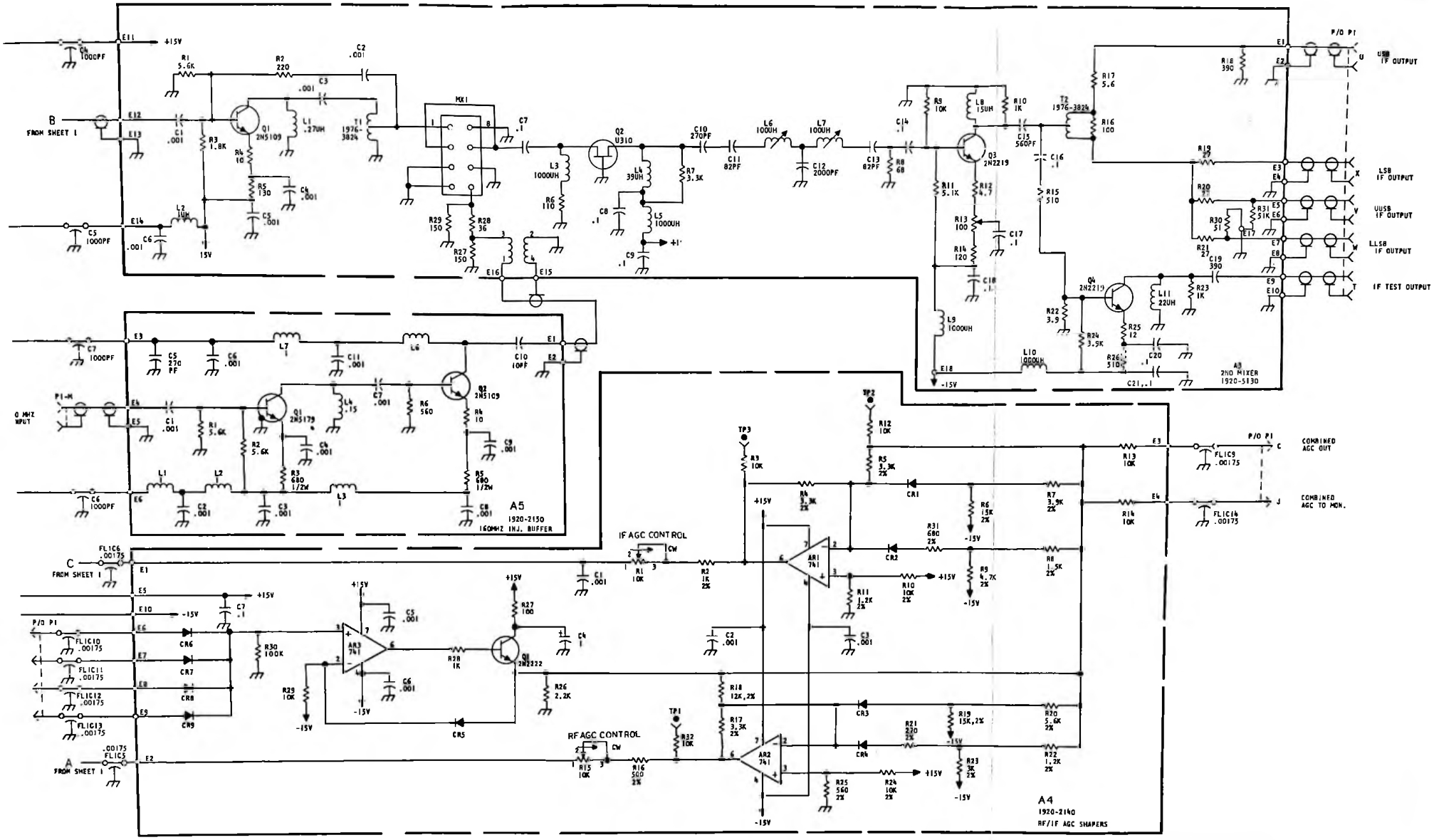

Figure 6. RF/IF Assembly, Schematic Diagram (Sheet 2 of 2)

A2A6A1

UNIT INSTRUCTIONS

AUDIO AMPLIFIER MONITOR ASSEMBLY

A2A6A1

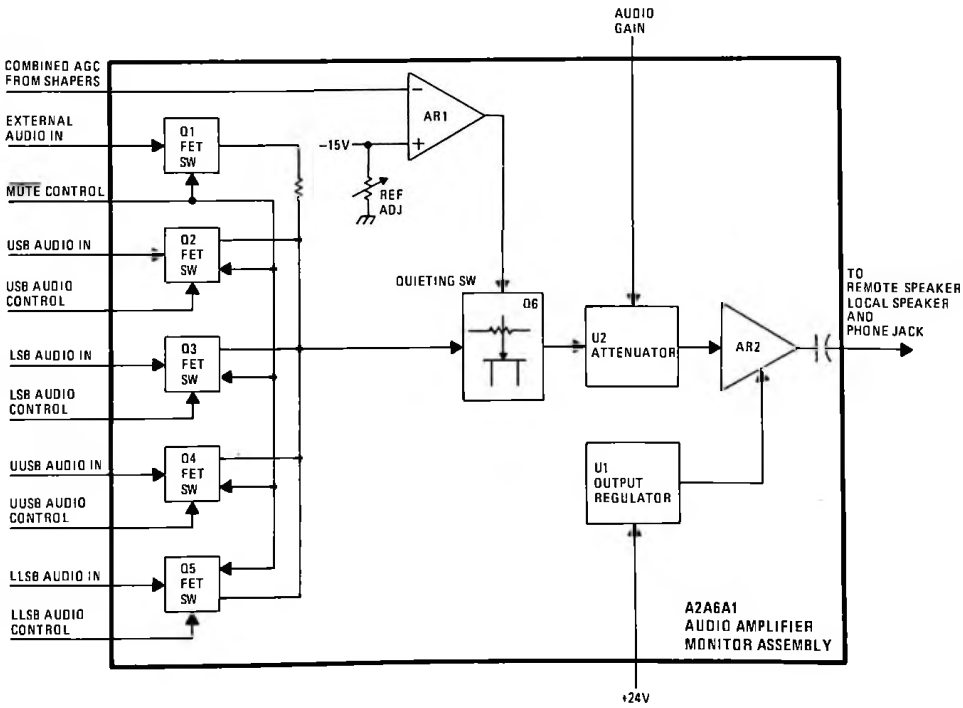

1. GENERAL DESCRIPTION

Audio Amplifier Monitor Assembly, A2A6A1, drives the front panel speaker on the RF-550 and provides for selection of any of four internal input audio channels (USB, LSB, UUSB, or LLSB), or an external channel, for connection to the amplifier. The output from this amplifier also drives the muting phone jack on the front panel and is available at the external speaker jack on the rear panel. When the receiver is muted, the input to this amplifier is automatically switched from the selected ISB channel to the external 600-ohm audio input line at TB3 on the rear panel. This feature provides a local audio monitoring capability for an audio signal being transmitted by the system transmitter, as in half duplex operation.

2. TECHNICAL CHARACTERISTICS

Weight:
4 ounces (113.4 grams)

Dimensions:
4.875H x 5.05W (inches)
12.38H x 12.827W (cm)

Power Requirements:
+24Vdc
-15Vdc
+15Vdc

Control Inputs:

$\overline{\text{MUTE}}$ Control	-15V for mute
Audio Gain	variable R to gnd.
UUSB Audio Control	+15 when selected
LLSB Audio Control	+15 when selected
USB Audio Control	+15 when selected
LSB Audio Control	+15 when selected
Combined AGC	0 to +4.5V

Signal Inputs:

USB Audio Input	250 mV
LSB Audio Input	250 mV
UUSB Audio Input	250 mV
LLSB Audio Input	250 mV
External Audio Input	500 mV max.

Signal Output:

Audio	2.5W max.

3. SEMICONDUCTOR COMPLEMENT

REF. DESIG.	TYPE	DESCRIPTION
A2A6A1		
AR1	741	Operational Amplifier
AR2	LM380N	Audio Power Amplifier
CR1 through CR10	1N3064	Diode
Q1	P1087E	Transistor, J-FET, P Channel
Q2 through Q6	U1899E	Transistor, J-FET, N Channel
U1	UJG7812393	12V Regulator
U2	MC3340P	Electronic Attenuator
VR1	1N4738	Diode, Zener, 8.2V

4. CIRCUIT DESCRIPTION

Figures 3 and 4 are the component location drawing and the schematic diagram for Assembly A2A6A1. The block diagram on the cover sheet of this section shows, in simplified form, signal paths, inputs and outputs, and the functional circuits of the assembly.

Five FET switches, Q1 through Q5, control the selection of the monitor amplifier input through C8 to U2-3. Q1 controls the external audio input in response to $\overline{\text{MUTE}}$ control information. When the receiver is muted, as is normally the case when an associated transmitter is keyed, the $\overline{\text{MUTE}}$ signal through CR1 turns on Q1 and selects the external audio input. This same $\overline{\text{MUTE}}$ signal through CR3, CR5, CR7, and CR9 biases off Q2, Q3, Q4, and Q5. With no external audio input, the monitor output is inactive. Monitoring of an external audio input during receiver muting is normally done only for half duplex or similar operation.

Selection of the desired USB, LSB, UUSB, or LLSB audio input is effected through FET switches Q2, Q3, Q4, and Q5. Figure 1 is a simplified diagram of the selection circuits,

showing the interrelationships of front panel control elements with the FET switches.

The front panel AF GAIN control varies the resistance to ground at pin 2 of electronic attenuator U2 to provide manual gain control. Automatic gain control is effected through operational amplifier AR1 and FET attenuator Q6. Combined AGC from AGC shapers on Assembly A2A5A4 is introduced at the inverting input of AR1. The AGC monitor level is established by R20 at the non-inverting input to AR1. R20 is adjusted as described in paragraph 5. Audio Power Amplifier AR2 drives front panel speaker LS1, phone jack J1, and an external speaker, if used. U1 and VR1 regulate the +24 Vdc at P1-9 to provide +20 Vdc for operation of AR2.

5. MAINTENANCE

Assembly A2A6A1 can be tested and adjusted in the RF-550 as described in the following procedure. Test equipment connections are shown in figure 2. This adjustment establishes the output level that will be held as a result of the combined AGC input from the RF/IF Assembly.

a. Equipment Required
- Signal Generator, HP-606 or equivalent
- Audio Voltmeter, HP-400F or equivalent
- 8-ohm, 5W, load resistor

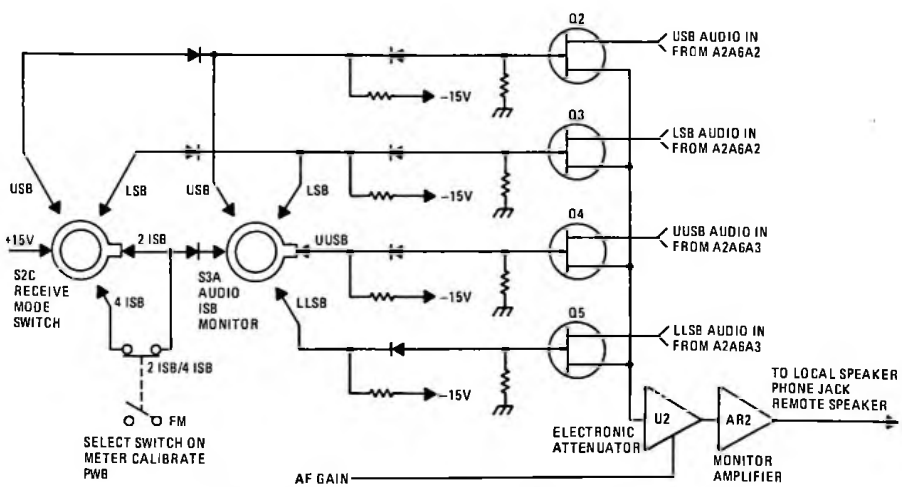

Figure 1. Audio Input Selection, Simplified Circuit Diagram

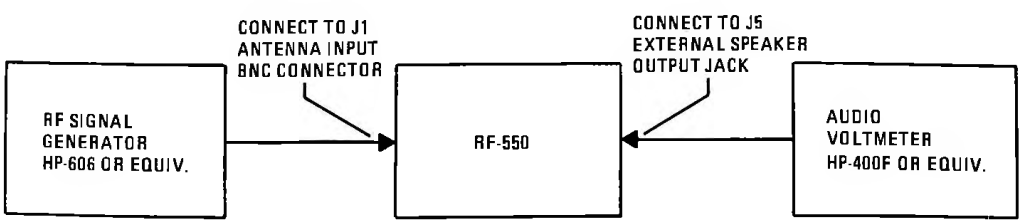

Figure 2. Test Equipment Connections for Audio Amplifier Monitor Adjustments

b. Connect calibrated output of signal generator to J1 antenna connector on RF-550 using a BNC-TO-BNC 50-ohm coaxial cable. Tune generator to a convenient frequency within the range of the RF-550 and set the output level to 10 mV. (-27dBm)

c. Connect the audio voltmeter and 8-ohm resistor to J5 on the RF-550 and select a convenient range to measure 0.245 Vrms.

d. Set RF-550 front panel switches as follows (LOCAL CONTROL):

- Frequency Select Switches to signal generator output frequency
- POWER to ON
- RECEIVE MODE to USB
- AGC to FAST
- TUNING MODE to FIXED
- RF GAIN fully clockwise

e. Adjust Signal Generator frequency vernier control for maximum receiver output on audio voltmeter (and local speaker), and carefully adjust AF GAIN control for a reference output indication of 0.245 Vrms at this 10 mV RF input level.

f. Decrease signal generator level to 0.05 mV; adjust R20 on Audio Amplifier Monitor PWB A2A6A1 for an audio output indication of 0.23 Vrms. This completes the output level adjustment. (-73dBm)

g. Disconnect signal generator. Audio voltmeter connected to J5 on the RF-550 should indicate 72 mV ± 20 mV.

6. PARTS LIST

Table 1 is the parts list for Audio Amplifier Monitor Assembly A2A6A1. Table 2 lists related manufacturer's codes.

7. COMPONENT LOCATION AND SCHEMATIC DIAGRAMS

Figures 3 and 4 contain component location and schematic diagrams for Audio Amplifier Monitor Assembly A2A6A1.

NOTICE

In some instances, the Integrated Circuit (IC) component types listed herein differ from those of the actual component. These components are physically and electronically interchangeable. Either type can be used for replacement purposes.

TABLE 1. PARTS LIST

REF DESIG	NOTES	NAME AND DESCRIPTION	FIG NO
A2A6		Card Cage Assembly: MFR 14304, PN 1920-1300	
A2A6A1		Audio Amplifier Monitor PWB Assembly: MFR 14304, PN 1920-2100	
AR1		Integrated Circuit: MFR 14304, Type 741 PN D50-0001-003	
AR2		Integrated Circuit: MFR 12040, PN LM380N	
AR3		Integrated Circuit, Dual Op Amp: MFR 04713, PN MC1458CP1	
C1 to C5		Capacitor, Fixed, Tantalum, 1 μF, ±20%, 20V: MFR 12954, PN D1R0GSA20M	
C6, C7		Capacitor, Fixed, Ceramic, 0.1 μF, ±20%, 50V: MFR 14304, PN C11-0005-104	
C8, C9		Capacitor, Fixed, Tantalum, 1 μF, ±20%, 20V: MFR 12954, PN D1R0GSA20M	
C10		Capacitor, Fixed, Tantalum, 82 μF, ±20%, 15V: MFR 12954, PN D82GSC15M	
C11		Capacitor, Fixed, Mica, 620 pF, ±5%, 500V: MIL Type CMR06F621J0DL	
C12		Capacitor, Fixed, Tantalum, 10 μF, ±20%, 35V: MFR 12954 PN D10GSC35M	
C13		Capacitor, Fixed, Ceramic, 0.1 μF, ±20%, 50V: MFR 14304, PN C11-0005-104	
C14		Capacitor, Fixed, Mica, 510 pF, ±5%, 500V: MIL Type CMR06F511J0DL	
C15		Capacitor, Fixed, Ceramic, 0.1 μF, ±20%, 50V: MFR 14304, PN C11-0005-104	
C16		Capacitor, Fixed, Tantalum, 350 μF, ±2%, 25V: MFR 56289, PN 109D351X0025W2	
C17		Capacitor, Fixed, Ceramic, 0.1 μF, ±20%, 50V: MFR 14304, PN C11-0005-104	
C18		Capacitor, Fixed, Mica, 68 pF, ±5%, 500V: MIL Type CMR05E680J0DL	
C19		Capacitor, Fixed, Tantalum, 350 μF, ±2%, 25V: MFR 56289, PN 109D351X0025W2	
C20, C21		Capacitor, Fixed, Tantalum, 10 μF, ±20%, 35V: MFR 12954, PN D10GSC35M	
C22, C23		Capacitor, Fixed, Ceramic, 0.1 μF, ±20%, 50V: MFR 14304, PN C11-0005-104	
CR1 to CR11		Diode: Type 1N3064	
Q1		Transistor, J-FET, P-Channel: MFR 17856, PN P1087AA	

TABLE 1. PARTS LIST (Cont)

REF DESIG	NOTES	NAME AND DESCRIPTION	FIG. NO.
Q2 to Q6		Transistor, J-FET, N-Channel: MFR 17856, PN U1899RR	
Q7		Transistor, J-FET, P-Channel: MFR 17856, PN P1087E	
R1 to R8		Resistor, Fixed, Composition, 100K, ±10%, 1/4W: MIL Type RCR07G104KM	
R9 to R13		Resistor, Fixed, Composition, 390K, ±10%, 1/4W: MIL Type RCR07G394KM	
R14		Resistor, Fixed, Composition, 4.7K, ±10%, 1/4W: MIL Type RCR07G472KM	
R15		Resistor, Fixed, Composition, 680 ohms, ±10%, 1/4W: MIL Type RCR07G681KM	
R16		Resistor, Fixed, Composition, 2.2K, ±10%, 1/4W: MIL Type RCR07G222KM	
R17		Resistor, Fixed, Composition, 10K, ±10%, 1/4W: MIL Type RCR07G103KM	
R18		Resistor, Fixed, Composition, 1K, ±10%, 1/4W: MIL Type RCR07G102KM	
R19		Resistor, Fixed, Composition, 1.5K, ±10%, 1/4W: MIL Type RCR07G152KM	

REF DESIG	NOTES	NAME AND DESCRIPTION	FIG. NO.
R20		Resistor, Variable, 1K: MFR 14304, PN R30-0001-102	
R21		Resistor, Fixed, Composition, 10K, ±10%, 1/4W: MIL Type RCR07G103KM	
R22		Resistor, Fixed, Composition, 1K, ±10%, 1/4W: MIL Type RCR07G102KM	
R23		Resistor, Fixed, Composition, 15K, ±10%, 1/4W: MIL Type RCR07G153KM	
R24		Resistor, Fixed, Composition, 10K, ±10%, 1/4W: MIL Type RCR07G103KM	
R25		Resistor, Fixed, Composition, 6.8K, ±10%, 1/4W: MIL Type RCR07G682KM	
R26, R27		Resistor, Fixed, Composition, 470K, ±10%, 1/4W: MIL Type RCR07G474KM	
R28		Resistor, Fixed, Composition, 1.8K, ±10%, 1/4W: MIL Type RCR07G182KM	
R29		Resistor, Fixed, Composition, 270 ohms, ±10%, 1/4W: MIL Type RCR07G271KM	

TABLE 1. PARTS LIST (Cont)

REF DESIG	NOTES	NAME AND DESCRIPTION	FIG. NO.
R30		Resistor, Fixed, Composition, 1K, ±10%, 1/4W: MIL Type RCR07G102KM	
R31		Resistor, Fixed, Composition, 100K, ±10%, 1/4W: MIL Type RCR07G104KM	
R32		Resistor, Fixed, Composition, 56K, ±10%, 1/4W: MIL Type RCR07G563KM	
R33		Resistor, Fixed, Composition, 1.2K, ±10%, 1/4W: MIL Type RCR07G122KM	
R34		Resistor, Fixed, Film, 12K, ±2%, 1/4W: MIL Type RL07S123G	
R35		Resistor, Fixed, Composition, 1K, ±10%, 1/4W: MIL Type RCR07G102KM	
R36		Resistor, Fixed, Film, 68K, ±2%, 1/4W: MIL Type RL07S683G	
R37		Resistor, Fixed, Film, 10K, ±2%, 1/4W: MIL Type RL07S103G	
R38		Resistor, Fixed, Film, 20K, ±2%, 1/4W: MIL Type RL07S203G	

REF DESIG	NOTES	NAME AND DESCRIPTION	FIG. NO.
R39		Resistor, Fixed Composition, 15K, ±5%, 1/4W: MIL Type RCR07G153JM	
R40		Resistor, Fixed, Composition, 1K, ±5%, 1/4W: MIL Type RCR07G102JM	
R41		Resistor, Fixed, Composition, 10K, ±10%, 1/4W: MIL Type RCR07G103KM	
R42		Resistor, Fixed, Composition, 220 ohms, ±10%, 1/4W: MIL Type RCR07G221KM	
R43, R44		Resistor, Fixed, Composition, 470K, ±10%, 1/4W: MIL Type RCR07G474KM	
TP1		Jack, Test Point, PC Board, White: MFR 14304, PN J60-0001-001	
U1		Integrated Circuit: MFR 07263, PN UJG7812393	
U2		Integrated Circuit MFR 04713, PN MC3340P	
VR1		Diode, Zener, 8.2V: Type 1N4738	

TABLE 2. INDEX OF MANUFACTURERS' CODES

MFR CODE	MFR NAME AND ADDRESS
04713	Motorola, Inc. Semiconductor Products Division 5005 East McDowell Road Phoenix, Arizona 85036
07263	Fairchild Semiconductor A Division of Fairchild Camera & Instrument Corp. 464 Ellis Street Mountain View, California 94042
12040	National Semiconductor Corp. P.O. Box 443 Commerce Drive Danbury, Connecticut 06810
12954	Dickson Electronics Corp. 8700 E. Thomas Road P.O. Box 1390 Scottsdale, Arizona 85252
14304	Harris Corporation RF Communications Division 1680 University Avenue Rochester, New York 14610
17856	Siliconix, Inc. 2201 Laurelwood Road Santa Clara, California 95054
56289	Sprague Electric Company North Adams, Massachusetts 01247

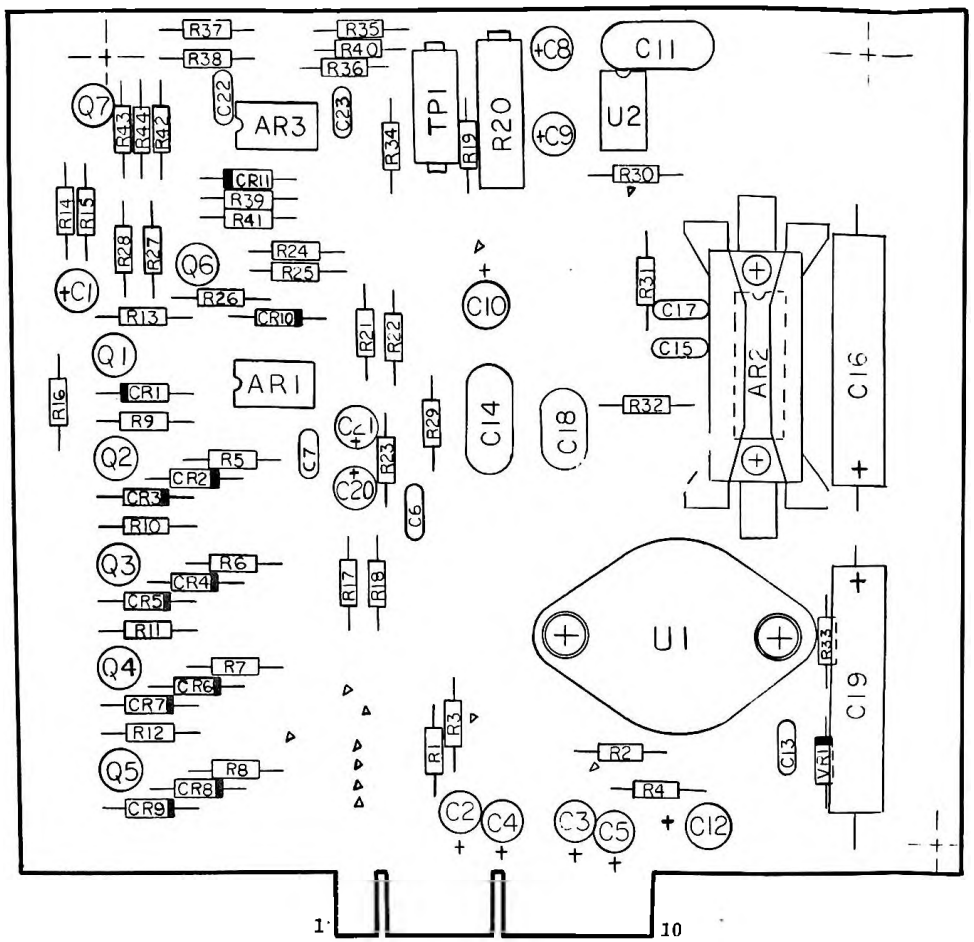

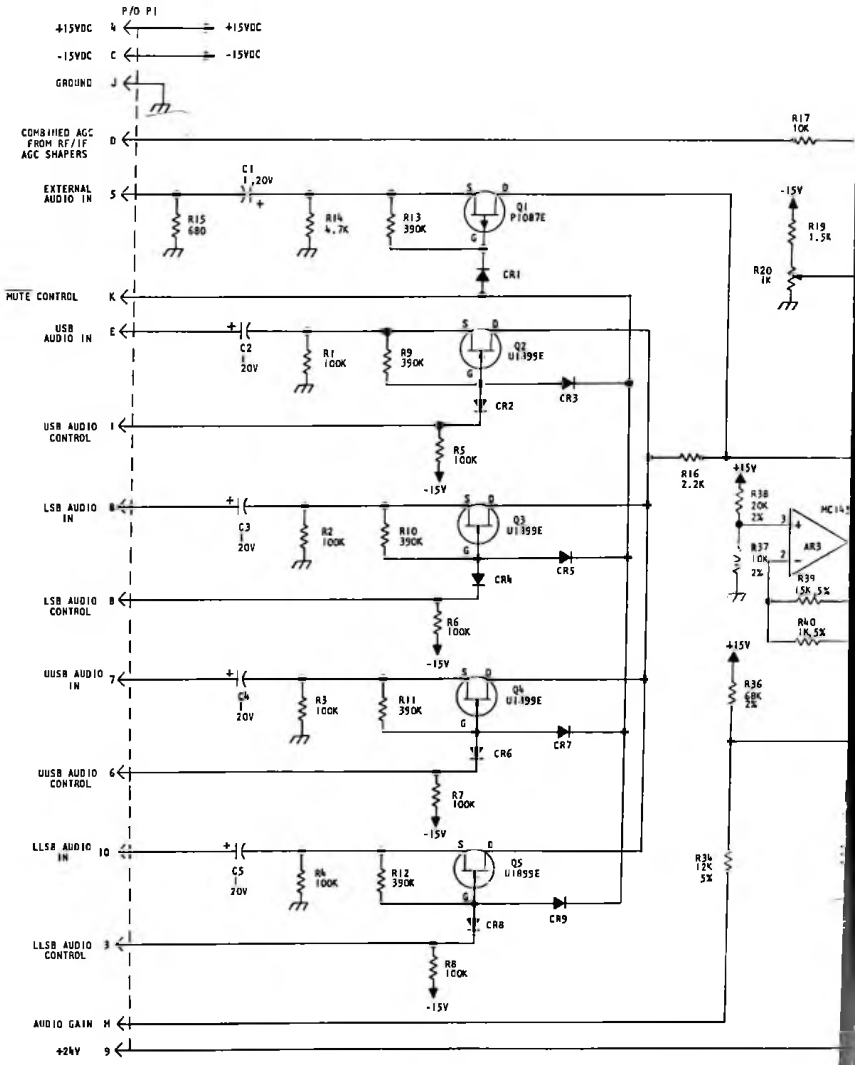

Figure 3. Audio Amplifier Monitor PWB, Component Locations

NOTES:

1. Prefix all reference designators with A2A6A1.
2. Unless otherwise specified:
   A. All resistances are in ohms, $\frac{1}{4}$W, $\pm$10%
   B. All capacitances are in microfarads.
   C. All diodes are 1N3064.

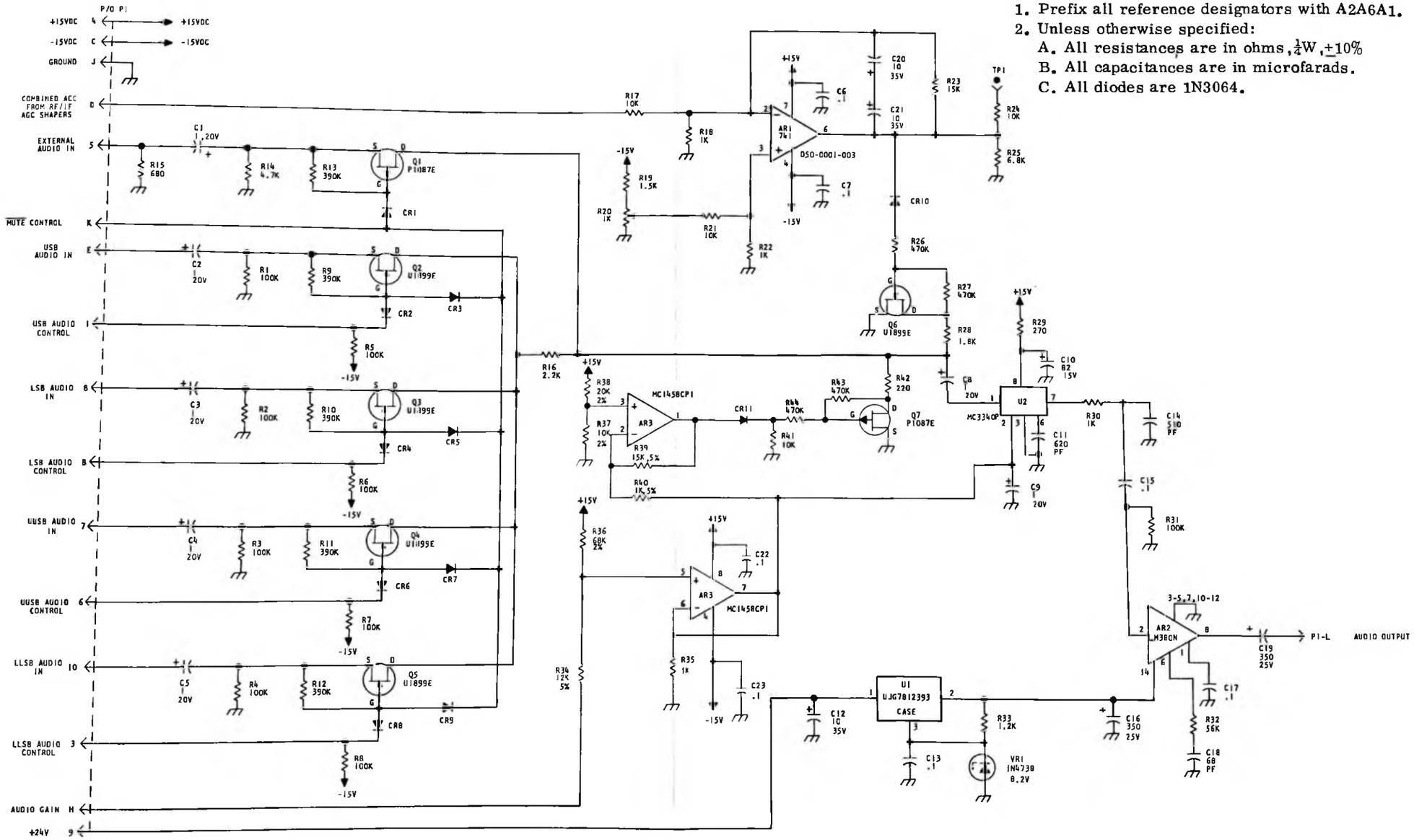

Figure 4. Audio Amplifier Monitor, Schematic Diagram

A2A6A2
A2A6A3

1. GENERAL DESCRIPTION

The automatic frequency control circuits on Phase Detector PWB Assembly A2A6A4 and AFC IF Amplifier PWB Assembly A2A6A5 maintain zero frequency error in the receiver when the AFC mode of operation is used. These circuits detect the phase error in the 1.75 MHz IF signal from IF Filter PWB Assembly A2A6A10 and generate an error signal that tunes the VCO (located in Translator Assembly A2A15) in the direction required to reduce the error. Block diagrams of the two assemblies are shown on the cover of this section.

2. TECHNICAL CHARACTERISTICS

A2A6A4

Weight:
5 ounces (141.7 grams)

Dimensions:
4.875H x 5.05W (inches)
12.38H x 12.83W (cm)

Power Requirements:
+15Vdc
-15Vdc

Signal Inputs:

AFC Reference	1.75 MHz, -10 dBm
AFC Signal	1.75 MHz, -20 dBm

Control Inputs:

Break Lock	+15V breaks lock
VFO Local Control Voltage	-6 to +6V
AFC Memory Disable	+15V Disables memory
AFC Remote Manual Tune In	-6 to +6V
Local/Remote	±15V, local = -15V
AFC Enable	+15V enabled
AFC Memory Disable Remote	+5V = disable

Control Outputs:

AFC Error;	-6V to +6V
AFC Lock Indicator	Gnd = Lock
AFC Memory Indicator	Gnd = Memory
AFC Memory Remote Indicator	Gnd = Memory
AFC Lock Remote Indicator	Gnd = Lock
Coherent AGC out	0 to +9V

A2A6A5

Weight:
5 ounces (141.7 grams)

Dimensions:
4.875H x 5.05W (inches)
12.38H x 12.83W (cm)

Power Requirements:
+15Vdc
-15Vdc

*Signal Inputs:
IF Input; 1.75 MHz, -101 dBm to -26 dBm

*Signal Outputs:
AFC Signal; 1.75 MHz, -20 dBm

Control Inputs:

Coherent AGC from AFC	0 to +9V
-6 dB Carrier Suppression	+15V
-16 dB Carrier Suppression	+15V
-20 dB Carrier Suppression	+15V
AGC to IF Amplifiers	0 to +9V

*Signal levels measured with AFC locked and with -6 dB carrier suppression.

3. SEMICONDUCTOR COMPLEMENT

REF. DESIG.	TYPE	DESCRIPTION
A2A6A4		
AR1 through AR3	741	OP AMP
AR4	MC1458-CP1	Dual OP AMP
AR5	8007C	FET input OP AMP
Q1 & Q2	2N2222	Transistor, NPN
Q3	2N2907	Transistor, PNP

3. SEMICONDUCTOR COMPLEMENT
(Continued)

REF. DESIG.	TYPE	DESCRIPTION
A2A6A4 (Cont)		
Q4 through Q7	2N2222	Transistor, NPN
Q8	2N2907	Transistor, PNP
Q9	U1899E	Transistor, J-FET, N-Channel
Q10	P1087E	Transistor, J-FET, P-Channel
Q11	U1899E	Transistor, J-FET, N-Channel
Q12	3N172	Transistor, MOS-FET
Q13	2N2222	Transistor, NPN
Q14	U1899E	Transistor, J-FET, N-Channel
Q15	P1087E	Transistor, J-FET, P-Channel
Q16 through Q20	2N2222	Transistor, NPN
Q21	2N2907	Transistor, PNP
Q22	2N2222	Transistor, NPN
Q23	P1087E	Transistor, J-FET, P-Channel
Q24	U1899E	Transistor, J-FET, N-Channel
U1	NE555V	Monostable Multivibrator
U2 & U3	SRA-1	Mixer, Double Balanced
A2A6A5		
AR1 & AR2	741	OP AMP
CR1 through CR4	5082-3081	Diode
CR5 through CR7	5082-3168	Diode
CR8 through CR14	1N3064	Diode
Q1 through Q8	2N2222	Transistor, NPN
VR1	1N4736A	Diode, Zener, 6.8V

4. CIRCUIT DESCRIPTION

The AFC circuits are shown schematically in figures 6 and 8. The following circuit description is based on the functional block diagram of the AFC loop shown in figure 1.

4.1 AFC IF AMPLIFIER PWB ASSEMBLY A2A6A5

A single 1.75 MHz signal from the 500 Hz CW Filter (P/O IF Filter PWB A2A6A10) enters AFC IF Amplifier PWB A2A6A5 at A5P2. The incoming 1.75 MHz signal is amplified in an IF amplifier network. Amplifier gain is automatically controlled by a 0 to +9 Vdc coherent AGC signal which is developed by Phase Detector PWB Assembly A2A6A4. The AGC voltage is shaped by diode shapers consisting of operational amplifiers AR1 and AR2 and associated components, and then applied to attenuator diodes CR1 through CR4. The 1.75 MHz signal is then filtered and fed into a switched attenuator. Here the signal level is adjusted so that the attenuator output level is equivalent to a -20 dB suppressed carrier. For example, if the carrier level is -6 dB or -16 dB, it will be attenuated 14 dB or 4 dB, respectively, so that the attenuator output level corresponds to -20 dB carrier level. The output from the attenuator is amplified in another IF amplifier and exits the pw board at A5P3.

4.2 AFC PHASE DETECTOR PWB ASSEMBLY A2A6A4

The 1.75 MHz signal from the AFC IF Amplifier pw board enters the Phase Detector at A4P3. The signal is amplified by IF amplifiers Q4 and Q5 and applied to P and Q phase detectors U2 and U3. A 1.75 MHz reference signal from VFO/BFO PWB A2A15A2 is also applied to the phase detectors via a 90° phase shifter. The phase relationships of these signals determine whether the AFC loop is in a "locked" or "pre-locked" state. Prior to lock, FET switch Q10 is biased on, and Q11 is off. In this condition pre-lock AGC is derived from peak detector CR1. The ratio of lock to pre-lock gain is determined by R23.

CAUTION

The RF-550 should never be operated with coherent AGC selected when not in the AFC mode.

Prior to lock, loop filter AR5 is ac coupled through C34 to the P detector output. DC feedback resistor R41 limits the gain and reduces the effect of dc offsets in the filter. FET switch Q12 is closed to provide dc feedback, causing AR5 to function as a loop filter.

As the IF frequency input approaches the 1.75 MHz reference frequency, a difference frequency "beat note" appears in the phase detector outputs. As the "beat note" becomes lower in frequency, the dc component increases in level. The dc level is amplified and integrated by correlation filter (P/O AR4) and eventually becomes large enough to cause lock comparator (P/O AR4) to switch. The increasing dc level also passes through FET switch Q14 (if biased on) and is applied to the VCO causing it to move toward zero beat.

When the lock comparator switches, its output goes from -15 Vdc to +15 Vdc. This biases off FET switch Q10 and biases on FET switch Q11 switching AGC from pre-lock to post-lock operation. The +15 Vdc also biases on FET switch Q9, shorting C34 and dc coupling the loop filter to the P detector output. FET switch Q12 opens the R41 feedback circuit and ac coupling is effected through C37. DC offset is no longer important since errors are now corrected by the feedback action of the AFC loop. The +15 Vdc output from the lock comparator also turns on the AFC LOCK indicators.

Prior to lock, FET switch Q15 is biased on enabling the AFC manual tune circuit; however, as soon as a positive voltage is applied to the switch it is biased off, disabling the manual circuit and placing the AFC loop in automatic control.

An AFC memory circuit is used to hold receiver tuning should the input signal momentarily fade below the "hold-in" threshold. Should this condition occur, a 15 second +15 Vdc pulse from monostable multivibrator U1 causes the VCO tuning circuitry to remain in the lock configuration and lights the AFC MEMORY indicators. C37 continues to supply the required tuning signals to the VCO as long as the 15 second pulse continues. If the received pilot carrier, remains below the hold in threshold for more than 15 seconds, the VCO tuning circuitry reverts to the pre-lock configuration, C37 discharges through Q12, and the lock sequence must start again. A +15 Vdc signal from either S8 or S11 will either disable the memory circuit or break loop lock, respectively.

4.3 AFC LOOP

It is important in understanding AFC circuit operation to look at the other elements in the loop outside of the AFC circuits. Refer to figure 1 for the following discussion.

Starting at the input to the VCO, the loop filter output controls the VCO located in Translator Assembly A2A15. The VCO output frequency is applied to Low Band PLL Assembly A2A14 where it is mixed, divided, fed through a phase detector, and used to control the 32.5 to 33.5 MHz VCO. The resultant frequency is fed through High Band PLL Assembly A2A8 and becomes the injection to the first mixer, where it is used to translate the received signal to the first IF frequency. The signal is then amplified and applied to the second mixer, where it is translated to the second IF frequency. The next element in the signal path is the 500 Hz CW filter. This element serves two distinct purposes: (1) Selects the desired carrier and rejects sidebands which could create a false lock. (2) Reduces the overall receiver noise bandwidth. From the CW filter the IF signal is applied to the AFC IF amplifier and then to the Phase Detector assembly. (These elements are covered in paragraphs 4.1 and 4.2). From here the loop starts again.

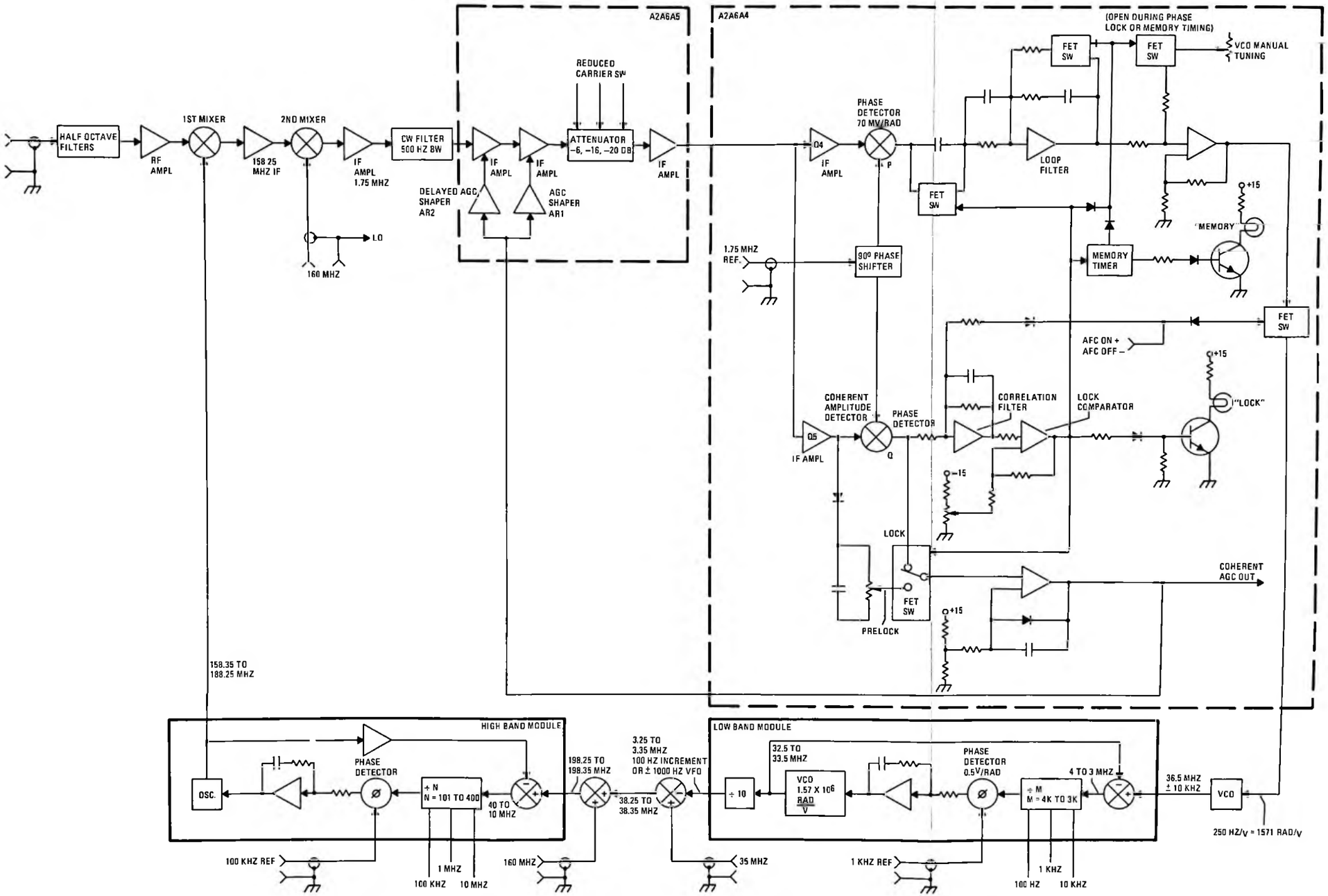

Figure 1. Functional Block Diagram

5. MAINTENANCE

Paragraphs 5.1 and 5.2 give the information necessary for testing and adjusting PWB Assemblies A2A6A4 and A2A6A5. For these tests and adjustments, the RF-550 is placed on a bench with test connections made as shown in figures 2, 3, and 4, and AFC and coherent AGC selected at RF-550 front panel. The pw boards are shown schematically in figures 6 and 8.

5.1 AFC IF AMPLIFIER PWB ASSEMBLY A2A6A5, TEST AND ADJUSTMENT PROCEDURES

PWB Assembly A2A6A5 is tested and adjusted in accordance with the following procedures.

a. Test equipment required:
- Signal Generator, HP-606B or equivalent
- RF Voltmeter, Boonton 91H or equivalent
- Card extender P/O MRK 1001-0189
- BNC-TO-SNAPON Adapter P/O MRK 1001-0189

b. Make test connections as shown in figure 2.

c. Connect signal generator to A2A6A10-J2 using BNC-TO-SNAPON Adapter P/O MRK 1001-0189. Adjust frequency to 1.75 MHz at -107 dBm.

d. Connect RF voltmeter to A2A6A4-J3 using a 50-ohm termination P/O Boonton 91H.

e. Turn on RF-550 and tune A2A6A5-T1 for maximum output.

f. Place REDUCED CARRIER switch (S7) in -20 dB position. Adjust A2A6A5-R2 for an overall gain of 107 dB.

g. The following readings should be obtained by operating REDUCED CARRIER switch through all position:

- -20 dB position; 107 dB gain, -107 dBm input, 0 dBm output
- -16 dB position; 103 dB gain, -103 dBm input, 0 dBm output
- -6 dB position; 93 dB gain, -93 dBm input, 0 dBm output

h. Turn off RF-550, disconnect test setup, and reinstall pw boards.

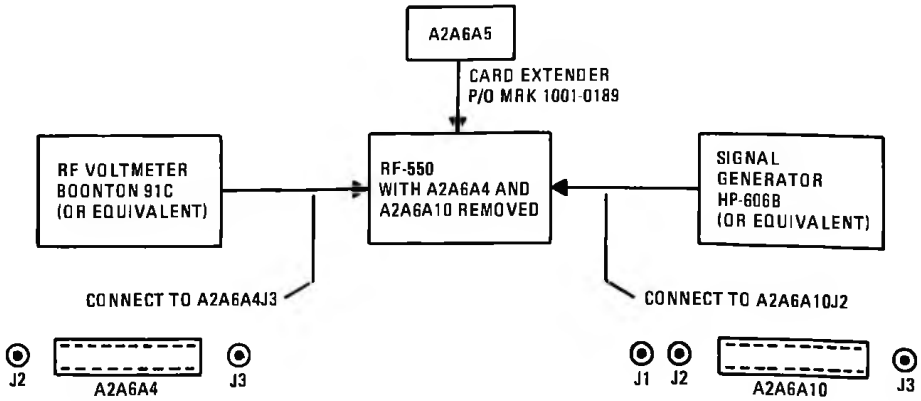

Figure 2. PWB A2A6A5 Test Setup Diagram

5.2 AFC PHASE DETECTOR PWB ASSEMBLY A2A6A4 TEST AND ADJUSTMENT PROCEDURES

PWB Assembly A2A6A4 is tested and adjusted in accordance with the following procedures.

a. Test equipment required:
- Signal Generator, HP-606B or equivalent
- RF Voltmeter, Boonton 91H or equivalent
- DC Digital Voltmeter
- Oscilloscope, Tektronix 453 or equivalent
- Card extender P/O MRK 1001-0189
- BNC-TO-SNAPON Adapter P/O MRK 1001-0189

b. Make test connections as shown in figure 3.

c. Set REDUCED CARRIER switch (S7) to -20 dB position.

d. Set signal generator for 1.75015 MHz at - 1.2 dBm. Connect signal generator to A2A6A10-J2.

e. Connect RF voltmeter to A2A6A4-J3 using terminated BNC adapter P/O Boonton 91C. Adjust A2A6A5-R2 for 0 dBm. (107 dB gain). (see 5.1.f)

f. Select -6 dB position with REDUCED CARRIER switch (S7).

g. Connect dc digital voltmeter to A2A6A5-TP1, and adjust RF gain control to obtain a reading of 4.0V. Increase signal input to (-47dBm) 1 mV, RF voltmeter should read 45 mV. If not, adjust A2A6A5R3 for voltmeter reading of 45 mV.

h. Make test connections as shown in figure 4.

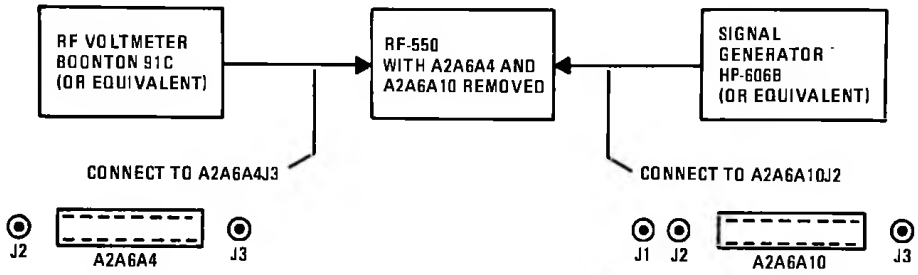

Figure 3. PWBA2A6A4 Test Setup Diagram

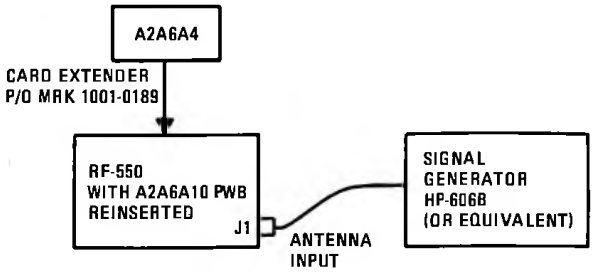

Figure 4. PWB A2A6A4 Test Setup Diagram

i. Connect signal generator to antenna input (J1), place PWB A2A6A4 on a card extender, and reinsert PWB A2A6A10. Select AFC tuning mode.

j. Set signal generator to 6.43015 MHz at (-87dBm) 10 uV, and tune RF-550 to 6.4300 MHz. USB Rotate RF gain control fully clockwise and select AGC FAST. A low frequency audio tone should be heard.

k. Measure voltage at A2A6A4-R64 wiper and adjust for a reading of -0.8V ± .1V.

l. Slowly decrease signal generator frequency until green LOCK indicator lights.

m. Measure signal level at A2A6A4-J3 using unterminated 91 H probe tip, and note the the reading. Depress green LOCK indicator. Level should increase 7dB. If not, adjust A2A6A4-R23 until a 7 dB difference occurs between locked (LOCK indicator lighted) and unlocked (LOCK indicator depressed) conditions. x 2,2

n. Remove PWB A2A6A4 from card extender and reinsert in RF-550.
Select -6dB position with REDUCED CARRIER SW.

(-67dBm) o. Set input level to 100 uV. Select coherent AGC and monitor A2A6A8-TP1. Adjust A2A6A5-R3 for a reading of 4.0V.

(9dBm) p. Increase input level to .630V and adjust A2A6A5-R1 for a reading of 9.0V.

(-64dBm) q. Reduce signal input to 100 uV and note RF LEVEL meter indication. Select -16 dB position with REDUCED CARRIER switch. Meter reading should increase 10 dB. Select -20 dB position with REDUCED CARRIER switch. Meter reading should increase 4 dB.

r. Return REDUCED CARRIER switch to -6 dB position and monitor A2A6A4-TP1 with oscilloscope.

s. Adjust A2A6A4-R44 so that the oscilloscope trace does not drift when A2A6A10 is momentarily removed and reinstalled.

NOTE

The oscilloscope trace may rise slightly but should return to reference position. It may be necessary to use a synthesizer for this adjustment as any frequency drift will cause the trace to move.

t. Turn off RF-550 and disconnect test setup.

6. PARTS LIST

Table 1 is a listing of all parts in the AFC IF Amplifier and AFC Phase Detector PWB Assemblies. Manufacturer Codes are listed in table 2.

7. COMPONENT LOCATION AND SCHEMATIC DIAGRAMS

Figures 5 through 8 are component location and schematic diagrams for AFC IF Amplifier and AFC Phase Detector PWB Assemblies.

NOTICE

In some instances, the Integrated Circuit (IC) component types listed herein differ from those of the actual component. These components are physically and electronically interchangeable. Either type can be used for replacement purposes.

TABLE 1. PARTS LIST

REF DESIG	NOTES	NAME AND DESCRIPTION	FIG. NO
A2A6		Card Cage Assembly: MFR 14304, PN 1920-1300	
A2A6A4		Phase Detector PWB Assembly: MFR 14304, PN 1920-2000	
AR1 to AR3		Integrated Circuit: MFR 14304, Type 741 PN D50-0001-003	
AR4		Integrated Circuit: MFR 04713, PN MC1458CP1	
AR5		Integrated Circuit: MFR 32293, PN 8007C	
C1 to C4		Capacitor, Fixed, Tantalum, 10 µF, ±20%, 35V: MFR 12954, PN D10GSC35M	
C5		Capacitor, Fixed, Ceramic, 0.47 µF, ±20%, 50V: MFR 14304, PN C11-0005-474	
C6 to C26		Capacitor, Fixed, Ceramic, 0.1 µF, ±20%, 50V: MFR 14304 PN C11-0005-104	
C27		Capacitor, Fixed, Mica, 3900 pF, ±5%, 500V: MIL Type CMR06F392JODL	
C28		Capacitor, Fixed, Mica, 1800 pF, ±5%, 500V: MIL Type CMR06F182JODL	
C29		Capacitor, Fixed, Mica, 3900 pF, ±5%, 500V: MIL Type CMR06F392JODL	
C30		Capacitor, Fixed, Mica, 1800 pF, ±5%, 500V: MIL Type CMR06F182JODL	
C31, C32		Capacitor, Fixed, Mica, 910 pF, ±5%, 500V: MIL Type CMR06F911JODL	
C33		Capacitor, Fixed, Ceramic, 0.01 µF, ±20%, 50V: MFR 14304, PN C11-0005-103	
C34		Capacitor, Fixed, Plastic, 10 µF, ±10%, 30V: MFR 12517, PN E12A106KSC	
C35		Not Used	
C36		Capacitor, Fixed, Ceramic, 0.1 µF, ±20%, 50V: MFR 14304, PN C11-0005-104	
C37		Capacitor, Fixed, Mylar, 1 µF, ±10%, 100V: MFR 14304, PN C8043	
C38		Capacitor, Fixed, Tantalum, 10 µF, ±20%, 35V: MFR 12954 PN D10GSC35M	
C39 to C41		Capacitor, Fixed, Ceramic, 0.1 µF, ±20%, 50V: MFR 14304, PN C11-0005-104	
C42		Capacitor, Fixed, Tantalum, 40 µF, +75-15%, 15V: MFR 56289 PN 113D406C7015G1	
C43, C44		Capacitor, Fixed, Ceramic, 0.1 µF, ±20%, 50V: MFR 14304, PN C11-0005-104	

TABLE 1. PARTS LIST (Cont)

REF DESIG	NOTES	NAME AND DESCRIPTION	FIG NO
C45		Capacitor, Fixed, Mylar, 1 μF, ±10%, 100V: MFR 14304, PN C8043	
C46, C47		Capacitor, Fixed, Tantalum, 10 μF, ±20%, 35V: MFR 12954, PN D10GSC35M	
C48		Capacitor, Fixed, Ceramic, 0.1 μF, ±20%, 50V: MFR 14304, PN C11-0005-104	
C49		Capacitor, Fixed, Ceramic, 0.01, ±20%, 50V: MFR 14304, PN C11-0005-103	
C50, C51		Capacitor, Fixed, Ceramic, 0.1 μF, ±20%, 50V: MFR 14304, PN C11-0005-104	
C52		Capacitor, Fixed, Ceramic, 0.01 μF, ±20%, 50V: MFR 14304, PN C11-0005-103	
C53		Capacitor, Fixed, Ceramic, 0.1 μF, ±20%, 50V: MFR 14304, PN C11-0005-104	
C54, C55		Capacitor, Fixed, Tantalum, 10 μF, ±20%, 35V: MFR 12954, PN D10GSC35M	
C56		Capacitor, Fixed, Ceramic, 0.47 μF, ±20%, 50V: MFR 14304, PN C11-0005-474	
C57		Capacitor, Fixed, Ceramic, 0.1 μF, ±20%, 50V: MFR 14304, PN C11-0005-104	

REF DESIG	NOTES	NAME AND DESCRIPTION	FIG. NO.
C58		Capacitor, Fixed, Ceramic, 0.47 uF, ±20%, 50V: MFR 14304, PN C11-0005-474	
CR1 to CR20		Diode: Type 1N3064	
J1		Not Used	
J2, J3		Connector, Bulkhead Subminiature: MFR 98291, PN 52-026-9120	
L1, L2		Inductor, Fixed, RF, 6.8 μH: MIL Type LT4K091	
L3 to L9		Inductor, Fixed, RF, 1000 μH: MIL Type LT10K036	
P1		Not Used	
P2, P3		Connector, Coaxial: MFR 98291, PN 52-053-0000	
Q1, Q2		Transistor, NPN: Type 2N2222	
Q3		Transistor, PNP: Type 2N2907	
Q4 to Q7		Transistor, NPN: Type 2N2222	
Q8		Transistor, PNP: Type 2N2907	
Q9		Transistor, J-FET, N-Channel: MFR 17856, PN U1899RR	
Q10		Transistor, J-FET, P-Channel: MFR 17856, PN P1087RR	
Q11		Transistor, J-FET, N-Channel: MFR 17856, PN U1899RR	
Q12		Transistor, MOS-FET: Type 3N172	
Q13		Transistor, NPN: Type 2N2222	

TABLE 1. PARTS LIST (Cont)

REF DESIG	NOTES	NAME AND DESCRIPTION	FIG. NO.
Q14		Transistor, J-FET, N-Channel: MFR 17856, PN U1899RR	
Q15		Transistor, J-FET, P-Channel: MFR 17856, PN P1087RR	
Q16 to Q20		Transistor, NPN: Type 2N2222	
Q21		Transistor, PNP: Type 2N2907	
Q22		Transistor, NPN: Type 2N2222	
Q23		Transistor, J-FET, P-Channel: MFR 17856, PN P1087RR	
Q24		Transistor, J-FET, N-Channel: MFR 17856, PN U1899RR	
R1		Resistor, Fixed, Composition, 330 ohms, ±5%, 1/4W: MIL Type RCR07G331JM	
R2		Resistor, Fixed, Composition, 18 ohms, ±5%, 1/4W: MIL Type RCR07G180JM	
R3		Resistor, Fixed, Composition, 270 ohms, ±5%, 1/4W: MIL Type RCR07G271JM	
R4		Resistor, Fixed, Composition, 270 ohms, ±10%, 1/4W: MIL Type RCR07G271KM	

REF DESIG	NOTES	NAME AND DESCRIPTION	FIG. NO.
R5		Resistor, Fixed, Composition, 1.5K, ±10%, 1/4W: MIL Type RCR07G152KM	
R6		Resistor, Fixed, Composition, 470 ohms, ±10%, 1/4W: MIL Type RCR07G471KM	
R7 to R9		Resistor, Fixed, Composition, 10K, ±10%, 1/4W: MIL Type RCR07G103KM	
R10		Resistor, Fixed, Composition, 330 ohms, ±10%, 1/4W: MIL Type RCR07G331KM	
R11		Resistor, Fixed, Composition, 10 ohms, ±10%, 1/4W: MIL Type RCR07G100KM	
R12		Resistor, Fixed, Composition, 150 ohms, ±10%, 1/4W: MIL Type RCR07G151KM	
R13		Resistor, Fixed, Composition, 10K, ±10%, 1/4W: MIL Type RCR07G103KM	
R14		Resistor, Fixed, Composition, 470 ohms, ±10%, 1/4W: MIL Type RCR07G471KM	
R15		Resistor, Fixed, Composition, 10K, ±10%, 1/4W: MIL Type RCR07G103KM	

TABLE 1. PARTS LIST (Cont)

REF DESIG	NOTES	NAME AND DESCRIPTION	FIG. NO.
R16		Resistor, Fixed, Composition, 10 ohms, ±10%, 1/4W: MIL Type RCR07G100KM	
R17		Resistor, Fixed, Composition, 1K, ±10%, 1/4W: MIL Type RCR07G102KM	
R18		Resistor, Fixed, Composition, 10K, ±10%, 1/4W: MIL Type RCR07G103KM	
R19		Resistor, Fixed, Composition, 470 ohms, ±10%, 1/4W: MIL Type RCR07G471KM	
R20		Resistor, Fixed, Composition, 10K, ±10%, 1/4W: MIL Type RCR07G103KM	
R21		Resistor, Fixed, Composition, 10 ohms, ±10%, 1/4W: MIL Type RCR07G100KM	
R22		Resistor, Fixed, Composition, 1K, ±10%, 1/4W: MIL Type RCR07G102KM	
R23		Resistor, Variable, 1K: MFR 80294, PN 3299X-1-102	
R24		Resistor, Fixed, Composition, 470 ohms, ±10%, 1/4W: MIL Type RCR07G471KM	

REF DESIG	NOTES	NAME AND DESCRIPTION	FIG. NO.
R25		Resistor, Fixed, Composition, 1.5K, ±10%, 1/4W: MIL Type RCR07G152KM	
R26		Resistor, Fixed, Composition, 270 ohms, ±10%, 1/4W: MIL Type RCR07G271KM	
R27		Resistor, Fixed, Composition, 10 ohms, ±10%, 1/4W: MIL Type RCR07G100KM	
R28		Resistor, Fixed, Composition, 150 ohms, ±10%, 1/4W: MIL Type RCR07G151KM	
R29 to R31		Resistor, Fixed, Composition, 10K, ±10%, 1/4W: MIL Type RCR07G103KM	
R32		Resistor, Fixed, Composition, 330 ohms, ±10%, 1/4W: MIL Type RCR07G331KM	
R33		Resistor, Fixed, Composition, 1K, ±10%, 1/4W: MIL Type RCR07G102KM	
R34		Resistor, Fixed, Composition, 51 ohms, ±5%, 1/4W: MIL Type RCR07G510JM	
R35		Resistor, Fixed, Composition, 1K, ±10%, 1/4W: MIL Type RCR07G102KM	

TABLE 1. PARTS LIST (Cont)

REF DESIG	NOTES	NAME AND DESCRIPTION	FIG. NO.
R36		Resistor, Fixed, Composition, 51 ohms, ±5%, 1/4W: MIL Type RCR07G510JM	
R37		Resistor, Fixed, Composition, 1M, ±10%, 1/4W: MIL Type RCR07G105KM	
R38		Resistor, Fixed, Composition, 1.5M, ±10%, 1/4W: MIL Type RCR07G155KM	
R39		Resistor, Fixed, Composition, 27K, ±5%, 1/4W: MIL Type RCR07G273JM	
R40		Not Used	
R41		Resistor, Fixed, Composition, 270K, ±5%, 1/4W: MIL Type RCR07G274JM	
R42		Resistor, Fixed, Composition, 18K, ±5%, 1/4W: MIL Type RCR07G183JM	
R43		Resistor, Fixed, Composition, 8.2K, ±10%, 1/4W: MIL Type RCR07G822KM	
R44		Resistor, Variable, 10K: MFR 80294, PN 3299X-1-103	
R45		Resistor, Fixed, Composition, 100K, ±10%, 1/4W: MIL Type RCR07G104KM	
R46		Resistor, Fixed, Composition, 56K, ±5%, 1/4W: MIL Type RCR07G563JM	
R47		Resistor, Fixed, Film, 10K, ±2%, 1/4W: MIL Type RL07S103G	
R48		Resistor, Fixed, Film, 47 ohms, ±2%, 1/4W: MIL Type RL07S470G	
R49		Resistor, Fixed, Composition, 56K, ±5%, 1/4W: MIL Type RCR07G563JM	
R50		Resistor, Fixed, Composition, 10K, ±5%, 1/4W: MIL Type RCR07G103JM	
R51		Resistor, Fixed, Composition, 1K, ±5%, 1/4W: MIL Type RCR07G102JM	
R52		Resistor, Fixed, Composition, 150K, ±5%, 1/4W: MIL Type RCR07G154JM	
R53		Resistor, Fixed, Composition, 470 ohms, ±10%, 1/4W: MIL Type RCR07G471KM	
R54		Resistor, Fixed, Composition, 1M, ±10%, 1/4W: MIL Type RCR07G105KM	

TABLE 1. PARTS LIST (Cont)

REF DESIG	NOTES	NAME AND DESCRIPTION	FIG. NO.
R55		Resistor, Fixed, Composition, 10K, ±5%, 1/4W: MIL Type RCR07G103JM	
R56		Resistor, Fixed, Composition, 10K, ±10%, 1/4W: MIL Type RCR07G103KM	
R57		Resistor, Fixed, Composition, 10 ohms, ±10%, 1/4W: MIL Type RCR07G100KM	
R58		Resistor, Fixed, Composition, 270K, ±5%, 1/4W: MIL Type RCR07G274JM	
R59		Resistor, Fixed, Composition, 330K, ±5%, 1/4W: MIL Type RCR07G334JM	
R60		Resistor, Fixed, Composition, 6.8K, ±5%, 1/4W: MIL Type RCR07G682JM	
R61		Resistor, Fixed, Composition, 10K, ±10%, 1/4W: MIL Type RCR07G103KM	
R62		Resistor, Fixed, Composition, 12K, ±10%, 1/4W: MIL Type RCR07G123KM	
R63		Resistor, Fixed, Composition, 470 ohms, ±5%, 1/4W: MIL Type RCR07G471JM	
R64		Resistor, Variable, 1K: MFR 80294, PN 3299X-1-102	
R65		Resistor, Fixed, Composition, 150K, ±5%, 1/4W: MIL Type RCR07G154JM	
R66		Resistor, Fixed, Composition, 10K, ±10%, 1/4W: MIL Type RCR07G103KM	
R67		Resistor, Fixed, Composition, 22K, ±10%, 1/4W: MIL Type RCR07G223KM	
R68		Resistor, Fixed, Composition, 27 ohms, ±10%, 1/4W: MIL Type RCR07G270KM	
R69 to R72		Resistor, Fixed, Composition, 47K, ±5%, 1/4W: MIL Type RCR07G473JM	
R73		Resistor, Fixed, Composition, 1.5M, ±10%, 1/4W: MIL Type RCR07G155KM	
R74		Resistor, Fixed, Composition, 10K, ±10%, 1/4W: MIL Type RCR07G103KM	
R75		Resistor, Fixed, Composition, 15K, ±10%, 1/4W: MIL Type RCR07G153KM	

TABLE 1. PARTS LIST (Cont)

REF DESIG	NOTES	NAME AND DESCRIPTION	FIG. NO.
R76		Resistor, Fixed, Composition, 10K, ±10%, 1/4W: MIL Type RCR07G103KM	
R77		Resistor, Fixed, Composition, 22K, ±10%, 1/4W: MIL Type RCR07G223KM	
R78		Resistor, Fixed, Composition, 10 ohms, ±10%, 1/4W: MIL Type RCR07G100KM	
R79, R80		Resistor, Fixed, Composition, 22K, ±10%, 1/4W: MIL Type RCR07G223KM	
R81		Resistor, Fixed, Composition, 18K, ±10%, 1/4W: MIL Type RCR07G183KM	
R82		Resistor, Fixed, Composition, 4.7K, ±10%, 1/4W: MIL Type RCR07G472KM	
R83		Resistor, Fixed, Composition, 47K, ±10%, 1/4W: MIL Type RCR07G473KM	
R84		Resistor; Fixed, Composition, 6.8K, ±10%, 1/4W: MIL Type RCR07G682KM	
R85		Resistor, Fixed, Composition, 27K, ±10%, 1/4W: MIL Type RCR07G273KM	

REF DESIG	NOTES	NAME AND DESCRIPTION	FIG. NO.
R86		Resistor, Fixed, Composition, 47K, ±10%, 1/4W: MIL Type RCR07G473KM	
R87		Resistor, Fixed, Composition, 1M, ±10%, 1/4W: MIL Type RCR07G105KM	
R88		Resistor, Fixed, Composition, 51 ohms, ±5%, 1/4W: MIL Type RCR07G510JM	
R89		Resistor, Fixed, Composition, 10K, ±10%, 1/4W: MIL Type RCR07G103KM	
R90		Resistor, Fixed, Composition, 22K, ±10%, 1/4W: MIL Type RCR07G223KM	
R91, R92		Resistor, Fixed, Composition, 18K, ±10%, 1/4W: MIL Type RCR07G183KM	
R93		Resistor, Fixed, Composition, 10K, ±10%, 1/4W: MIL Type RCR07G103KM	
R94		Resistor, Fixed, Composition, 22K, ±10%, 1/4W: MIL Type RCR07G223KM	
R95 to R97		Resistor, Fixed, Composition, 1.5M, ±10%, 1/4W: MIL Type RCR07G155KM	

TABLE 1. PARTS LIST (Cont)

REF DESIG	NOTES	NAME AND DESCRIPTION	FIG. NO.
R98		Resistor, Fixed, Composition, 10K, ±10%, 1/4W: MIL Type RCR07G103KM	
R99		Resistor, Fixed, Composition, 51 Ohms, ±10%, 1/4W: MIL Type RCR07G510KM	
T1		Transformer, Phase Shift: MFR 14304, PN 1920-0630	
TP1		Test Point, Brown: MFR 74970, PN 105-1108-001	
TP2		Test Point, Red: MFR 74970, PN 105-1102-001	
TP3		Test Point, Orange: MFR 74970, PN 105-1106-001	
U1		Integrated Circuit: MFR 18324, PN NE555N	
U2, U3		Mixer, Double Balanced: MFR 15542, PN SRA-1	
A2A6A5		AFC-IF Amplifier PWB Assembly: MFR 14304, PN 1920-2030	
AR1, AR2		Integrated Circuit: MFR 14304, Type 741 PN D50-0001-003	
C1 to C6		Capacitor, Fixed, Ceramic, 0.1 μF, ±20%, 50V: MFR 14304, PN C11-0005-104	
C7, C8		Capacitor, Fixed, Ceramic, 0.001 μF, ±20%, 50V: MFR 14304, PN C11-0005-102	
C9, C10		Capacitor, Fixed, Ceramic, 0.1 μF, ±20%, 50V: MFR 14304, PN C11-0005-104	
C11, C12		Capacitor, Fixed, Ceramic, 0.001 μF, ±20%, 50V: MFR 14304, PN C11-0005-102	
C13, C14		Capacitor, Fixed, Ceramic, 0.1 μF, ±20%, 50V: MFR 14304, PN C11-0005-104	
C15		Capacitor, Fixed, Tantalum, 10 μF, ±20%, 35V: MFR 12954, PN D10GSC35M	
C16		Capacitor, Fixed, Ceramic, 0.1 μF, ±20%, 50V: MFR 14304, PN C11-0005-104	
C17, C18		Capacitor, Fixed, Ceramic, 0.001 μF, ±20%, 50V: MFR 14304, PN C11-0005-102	
C19		Capacitor, Fixed, Ceramic, 0.1 μF, ±20%, 50V: MFR 14304, PN C11-0005-104	
C20, C21		Capacitor, Fixed, Ceramic, 0.001 μF, ±20%, 50V: MFR 14304, PN C11-0005-102	
C22, C23		Capacitor, Fixed, Ceramic, 0.1 μF, ±20%, 50V: MFR 14304, PN C11-0005-104	

TABLE 1. PARTS LIST (Cont)

REF DESIG	NOTES	NAME AND DESCRIPTION	FIG NO
C24		Capacitor, Fixed, Mica, 470 pF, ±5%, 500V: MIL Type CMR06F471J0DL	
C25		Capacitor, Fixed, Ceramic, 0.22 μF, ±20%, 50V: MFR 14304, PN C11-0005-224	
C26		Capacitor, Fixed, Tantalum, 10 μF, ±20%, 35V: MFR 12954, PN D10GSC35M	
C27, C28		Capacitor, Fixed, Ceramic, 0.01μF, ±20%, 50V: MFR 14304, PN C11-0005-104	
C29		Capacitor, Fixed, Tantalum, 1 μF, ±20%, 20V: MFR 12954, PN D1R0GSA20M	
C30 to C43		Capacitor, Fixed, Ceramic, 0.1 μF, ±20%, 50V: MFR 14304, PN C11-0005-104	
C44,C45		Capacitor, Fixed, Ceramic, 0.47 μF, ±20%, 50V: MFR 14304, PN C11-0005-474	
CR1 to CR4		Diode: MFR 28480, PN 5082-3081	
CR5 to CR7		Diode: MFR 28480, PN 5082-3168	
CR8 to CR14		Diode: Type 1N3064	
J1		Not Used	
J2, J3		Connector, Bulkhead Subminiature: MFR 98291, PN 52-026-9120	

REF DESIG	NOTES	NAME AND DESCRIPTION	FIG. NO.
L1 to L6		Inductor, Fixed, RF, 1000 μH: MIL Type LT10K036	
L7		Inductor, Fixed, RF, 220 μH: MIL Type LT10K020	
L8		Inductor, Fixed, RF, 240 μH: MIL Type LT10K021	
L9		Inductor, Fixed, RF, 330 μH: MIL Type LT10K024	
L10		Inductor, Fixed, RF, 390 μH: MIL Type LT10K026	
L11 to L14		Inductor, Fixed, RF, 1000 μH: MIL Type LT10K036	
P1		Not Used	
P2, P3		Connector, Coaxial: MFR 98291, PN 52-053-0000	
Q1 to Q8		Transistor, NPN: Type 2N2222	
R1		Resistor, Variable, 1K: MFR 80294, PN 3299X-1-102	
R2		Resistor, Variable, 100 ohms: MFR 80294, PN 3299X-1-101	
R3		Resistor, Variable, 5K: MFR 80294, PN 3299X-1-502	
R4		Resistor, Fixed, Composition, 18 ohms, ±5%, 1/4W: MIL Type RCR07G180JM	

TABLE 1. PARTS LIST (Cont)

REF DESIG	NOTES	NAME AND DESCRIPTION	FIG. NO.
R5, R6		Resistor, Fixed, Composition, 1K, ±5%, 1/4W: MIL Type RCR07G102JM	
R7		Resistor, Fixed, Composition, 12K, ±5%, 1/4W: MIL Type RCR07G123JM	
R8		Resistor, Fixed, Composition, 6.8K, ±5%, 1/4W: MIL Type RCR07G682JM	
R9		Resistor, Fixed, Composition, 330 ohms, ±5%, 1/4W: MIL Type RCR07G331JM	
R10		Resistor, Fixed, Composition, 33 ohms, ±5%, 1/4W: MIL Type RCR07G330JM	
R11		Resistor, Fixed, Composition, 330 ohms, ±5%, 1/4W: MIL Type RCR07G331JM	
R12		Resistor, Fixed, Composition, 12K, ±5%, 1/4W: MIL Type RCR07G123JM	
R13		Resistor, Fixed, Composition, 6.8K, ±5%, 1/4W: MIL Type RCR07G682JM	
R14		Resistor, Fixed, Composition, 390 ohms, ±5%, 1/4W: MIL Type RCR07G391JM	

REF DESIG	NOTES	NAME AND DESCRIPTION	FIG. NO.
R15		Resistor, Fixed, Composition, 15 ohms, ±5%, 1/4W: MIL Type RCR07G150JM	
R16		Resistor, Fixed, Composition, 4.7K, ±5%, 1/4W: MIL Type RCR07G472JM	
R17		Resistor, Fixed, Composition, 330 ohms, ±5%, 1/4W: MIL Type RCR07G331JM	
R18		Resistor, Fixed, Composition, 12K, ±5%, 1/4W: MIL Type RCR07G123JM	
R19		Resistor, Fixed, Composition, 6.8K, ±5%, 1/4W: MIL Type RCR07G682JM	
R20		Resistor, Fixed, Composition, 470 ohms, ±5%, 1/4W: MIL Type RCR07G471JM	
R21		Resistor, Fixed, Composition, 47 ohms, ±5%, 1/4W: MIL Type RCR07G470JM	
R22		Resistor, Fixed, Composition, 680 ohms, ±5%, 1/4W: MIL Type RCR07G681JM	
R23		Resistor, Fixed, Composition, 12K, ±5%, 1/4W: MIL Type RCR07G123JM	

TABLE 1. PARTS LIST (Cont)

REF DESIG	NOTES	NAME AND DESCRIPTION	FIG NO.
R24		Resistor, Fixed, Composition, 470 ohms, ±5%, 1/4W: MIL Type RCR07G471JM	
R25		Resistor, Fixed, Composition, 6.8K, ±5%, 1/4W: MIL Type RCR07G682JM	
R26		Resistor, Fixed, Composition, 47 ohms, ±5%, 1/4W: MIL Type RCR07G470JM	
R27		Resistor, Fixed, Composition, 680 ohms, ±5%, 1/4W: MIL Type RCR07G681JM	
R28, R29		Resistor, Fixed, Composition, 12K, ±5%, 1/4W: MIL Type RCR07G123JM	
R30		Resistor, Fixed, Composition, 33 ohms, ±5%, 1/4W: MIL Type RCR07G330JM	
R31		Resistor, Fixed, Composition, 1K, ±5%, 1/4W: MIL Type RCR07G102JM	
R32, R33		Resistor, Fixed, Composition, 6.8K, ±5%, 1/4W: MIL Type RCR07G682JM	
R34		Resistor, Fixed, Composition, 100 ohms, ±5%, 1/4W: MIL Type RCR07G101JM	

REF DESIG	NOTES	NAME AND DESCRIPTION	FIG. NO.
R35		Resistor, Fixed, Composition, 470 ohms, ±5%, 1/4W: MIL Type RCR07G471JM	
R36		Resistor, Fixed, Composition, 82 ohms, ±5%, 1/4W: MIL Type RCR07G820JM	
R37		Resistor, Fixed, Composition, 47 ohms, ±5%, 1/4W: MIL Type RCR07G470JM	
R38		Resistor, Fixed, Composition, 56 ohms, ±5%, 1/4W: MIL Type RCR07G560JM	
R39		Resistor, Fixed, Composition, 27 ohms, ±5%, 1/4W: MIL Type RCR07G270JM	
R40		Resistor, Fixed, Composition, 1K, ±5%, 1/4W: MIL Type RCR07G102JM	
R41, R42		Resistor, Fixed, Composition, 6.8K, ±5%, 1/4W: MIL Type RCR07G682JM	
R43		Resistor, Fixed, Composition, 220 ohms, ±5%, 1/4W: MIL Type RCR07G221JM	
R44		Resistor, Fixed, Composition, 10 ohms, ±5%, 1/4W: MIL Type RCR07G100JM	

TABLE 1. PARTS LIST (Cont)

REF DESIG	NOTES	NAME AND DESCRIPTION	FIG NO
R45		Resistor, Fixed, Composition, 470 ohms, ±5%, 1/4W. MIL Type RCR07G471JM	
R46		Resistor, Fixed, Composition, 10K, ±5%, 1/4W: MIL Type RCR07G103JM	
R47, R48		Resistor, Fixed, Film, 10K, ±2%, 1/4W: MIL Type RL07S103G	
R49		Resistor, Fixed, Film, 2.4K, ±2%, 1/4W: MIL Type RL07S242G	
R50		Resistor, Fixed, Film, 15K, ±2%, 1/4W: MIL Type RL07S153G	
R51		Resistor, Fixed, Film, 130K, ±2%, 1/4W: MIL Type RL07S134G	
R52		Resistor, Fixed, Film, 27K, ±2%, 1/4W: MIL Type RL07S273G	
R53		Resistor, Fixed, Film, 330 ohms, ±2%, 1/4W: MIL Type RL07S331G	
R54		Resistor, Fixed, Film, 6.2K, ±2%, 1/4W: MIL Type RL07S622G	
R55		Resistor, Fixed, Film, 270 ohms, ±2%, 1/4W: MIL Type RL07S271G	

REF DESIG	NOTES	NAME AND DESCRIPTION	FIG. NO.
R56		Resistor, Fixed, Composition, 180 ohms, ±5%, 1/4W: MIL Type RCR07G181JM	
R57		Resistor, Fixed, Composition, 10K, ±5%, 1/4W: MIL Type RCR07G103JM	
R58		Resistor, Fixed, Film, 10K, ±2%, 1/4W: MIL Type RL07S103G	
R59		Resistor, Fixed, Film, 1.8K, ±2%, 1/4W: MIL Type RL07S182G	
R60		Resistor, Fixed, Film, 7.5K, ±2%, 1/4W: MIL Type RL07S752G	
R61		Resistor, Fixed, Film, 2.4K, ±2%, 1/4W: MIL Type RL07S242G	
R62		Resistor, Fixed, Film, 5.1K, ±2%, 1/4W: MIL Type RL07S512G	
R63		Resistor, Fixed, Film, 20K, ±2%, 1/4W: MIL Type RL07S203G	
R64		Resistor, Fixed, Film, 10K, ±2%, 1/4W: MIL Type RL07S103G	
R65		Resistor, Fixed, Film, 220 ohms, ±2%, 1/4W: MIL Type RL07S221G	

TABLE 1. PARTS LIST (Cont)

REF DESIG	NOTES	NAME AND DESCRIPTION	FIG. NO.
R66		Resistor, Fixed, Composition, 10K, ±5%, 1/4W: MIL Type RCR07G103JM	
R67		Resistor, Fixed, Composition, 5.6K, ±5%, 1/4W: MIL Type RCR07G562JM	
R68		Resistor, Fixed, Film, 33 ohms, ±2%, 1/4W: MIL Type RL07S330G	
R69 to R71		Resistor, Fixed, Film, 1K, ±2%, 1/4W: MIL Type RL07S102G	
R72		Resistor, Fixed, Composition, 47 ohms, ±5%, 1/4W: MIL Type RCR07G470JM	

REF DESIG	NOTES	NAME AND DESCRIPTION	FIG. NO.
T1		Transformer, IF, Tunable: MFR 14304, PN 1920-0620	
T2		Transformer, MFR 14304, PN 1976-3824	
TP1		Test Point, Brown: MFR 74970, PN 105-1108-001	
TP2		Test Point, Red: MFR 74970, PN 105-1102-001	
TP3		Test Point, Orange: MFR 74970, PN 105-1106-001	
VR1		Diode, Zener: Type 1N4736A	

TABLE 2. INDEX OF MANUFACTURERS' CODES

MFR CODE	MFR NAME AND ADDRESS
04713	Motorola, Inc. Semiconductor Products Division 5005 East McDowell Road Phoenix, Arizona 85036
12517	Component Research Co., Inc. 1717 19th Street Santa Monica, California 90404
12954	Dickson Electronics Corp. 8700 E. Thomas Road P.O. Box 1390 Scottsdale, Arizona 85252
14304	Harris Corporation RF Communications Division 1680 University Avenue Rochester, New York 14610
15542	Mini-Circuits Laboratory Div. of Scientific Components Corp. 2913 Quentin Road Brooklyn, New York 11229
17856	Siliconix, Inc. 2201 Laurelwood Road Santa Clara, California 95054
18324	Signetics Corp. 811 E. Arques Sunnyvale, California 94086
28480	Hewlett-Packard Company Corporate HQ. 1501 Page Mill Road Palo Alto, California 94304
32293	Intersil, Inc. 10900 N. Tantau Avenue Cupertino, California 95014
56289	Sprague Electric Company North Adams, Massachusetts 01247

TABLE 2. INDEX OF MANUFACTURERS' CODES (Cont)

MFR CODE	MFR NAME AND ADDRESS
74970	Johnson E. F. Company, Inc. 299 10th Avenue, S. W. Waseca, Minnesota 56093
80294	Bourns, Inc. Instrument Division 6135 Magnolia Avenue Riverside, California 92506
98291	Sealectro Corp. 225 Hoyt Mamaroneck, New York 10544

NOTES:

1. Unless otherwise specified:
   A. All Resistance values are in ohms, 1.4W, ± 5%.
   B. All Capacitance values are in Microfarads.
   C. All Inductance values are in Microhenries.
   D. All Transistors are 2N2222.
2. Prefix all Reference Designations with A2A6A5.
3. C45 mounted on reverse side of PWB in early models.

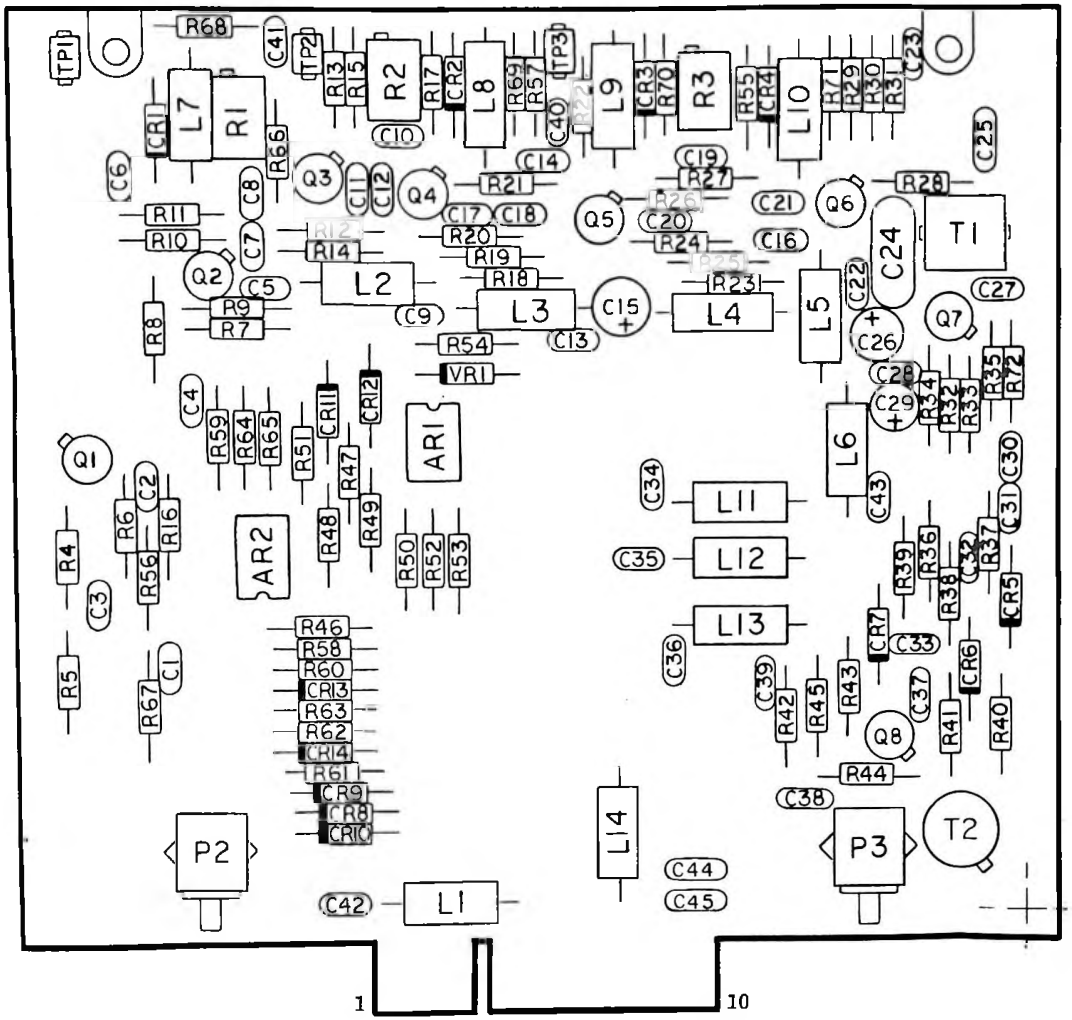

Figure 5. AFC, IF Amplifier PWB, Component Locations

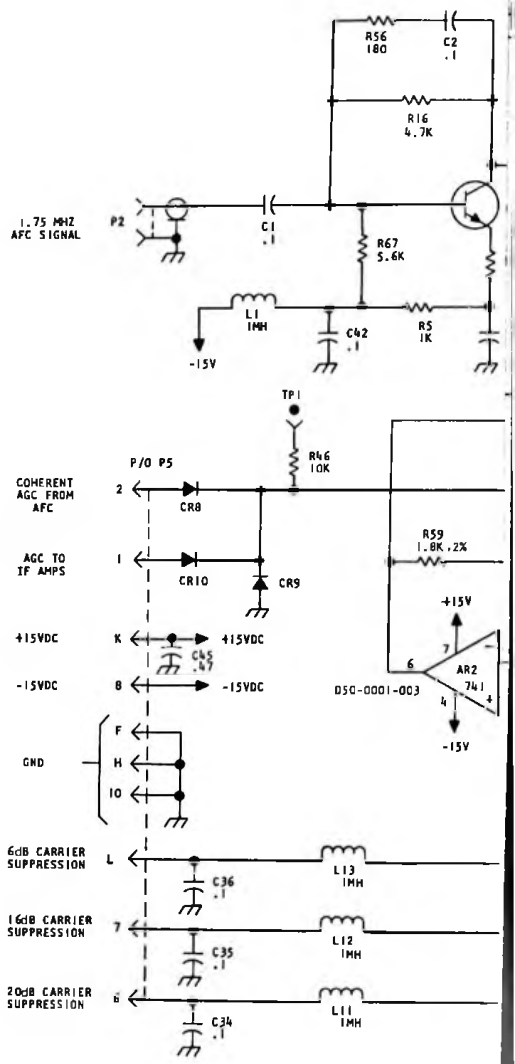

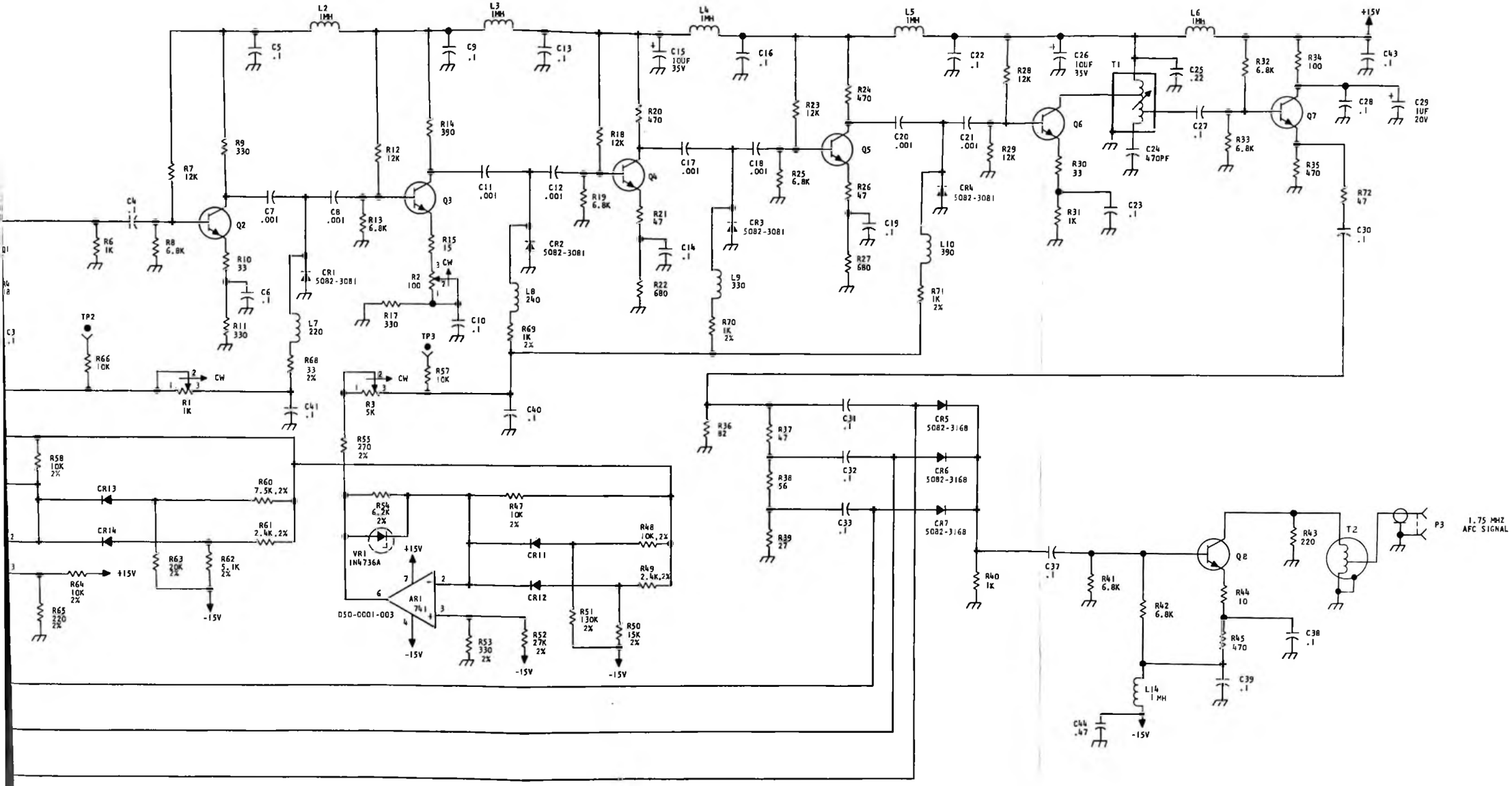

Figure 6. AFC, IF Amplifier PWB, Schematic Diagram

NOTES:

1. UNLESS OTHERWISE SPECIFIED:
   A. ALL RESISTANCE VALUES ARE IN OHMS, 1/4W, 10%.
   B. ALL CAPACITORS ARE IN MICROFARADS.
   C. ALL TRANSISTORS ARE 2N2222.
   D. ALL DIODES ARE 1N3064.
   E. ALL INDUCTANCE VALUES ARE IN MILLIHENRIES.
2. PREFIX ALL REFERENCE DESIGNATIONS WITH A2A6A4.

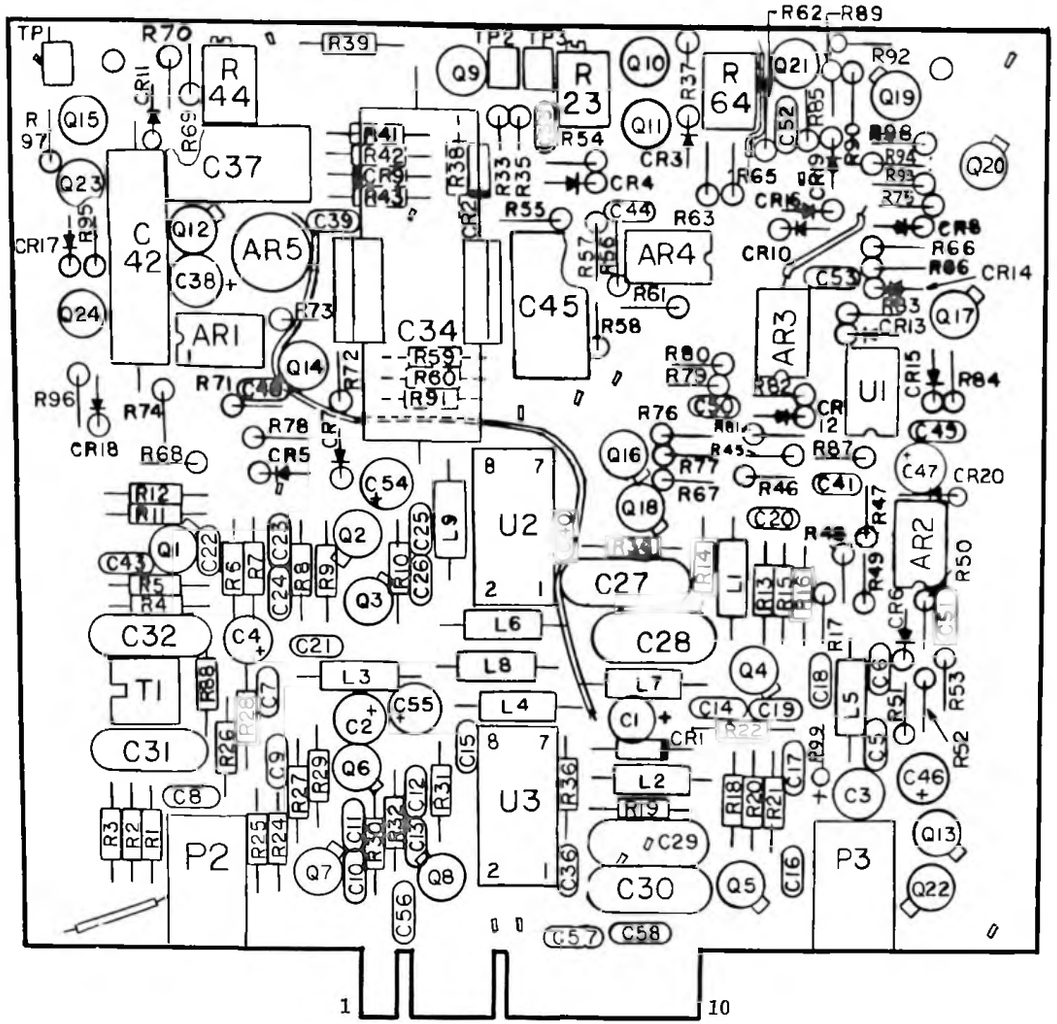

Figure 7. AFC, Phase Detector PWB, Component Locations

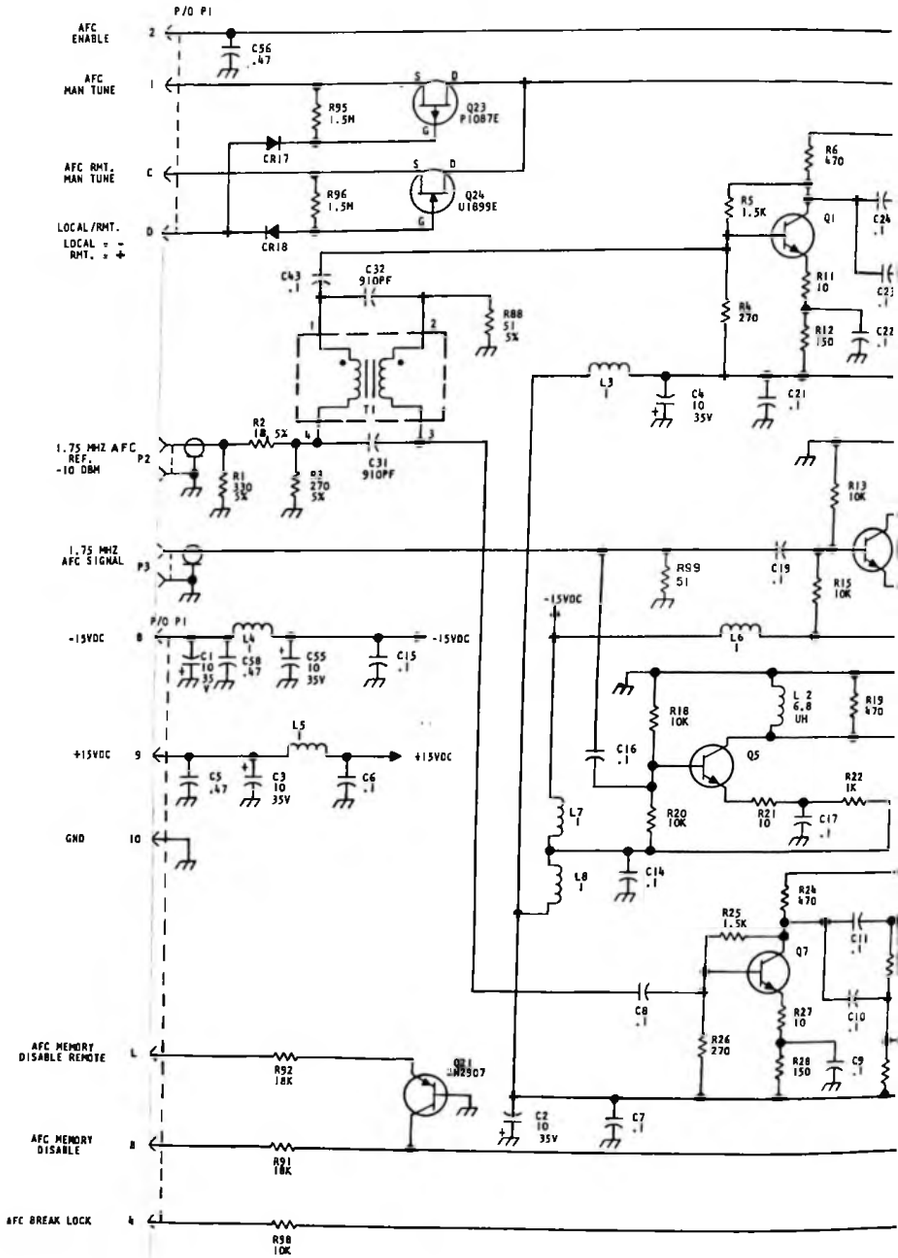

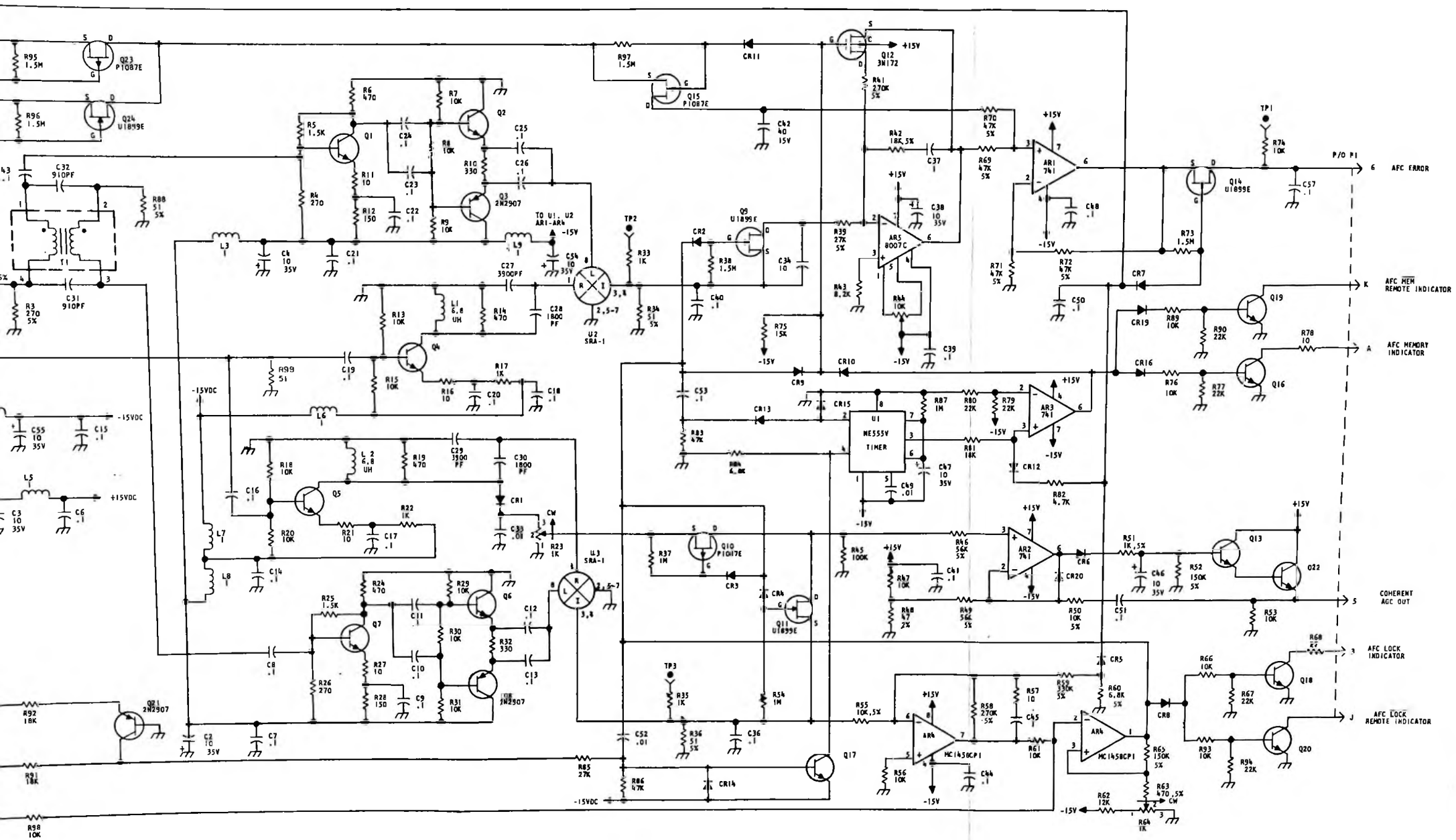

Figure 8. AFC, Phase Detector PWB, Schematic Diagram

A2A6A6 A2A6A8
A2A6A7 A2A6A9

UNIT INSTRUCTIONS

IF AMPLIFIER

A2A6A6
A2A6A7
A2A6A8
A2A6A9

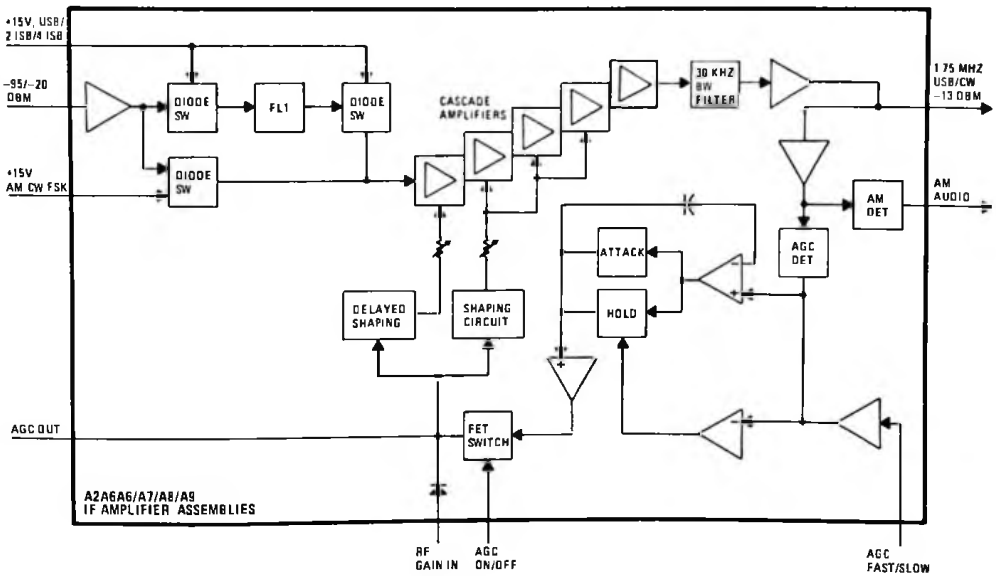

TABLE OF CONTENTS

A2A6A6, A2A6A7, A2A6A8, A2A6A9

Paragraph		Page
1	General Description	1
2	Technical Characteristics	1
3	Semiconductor Complement	1
4	Circuit Description	1
5	Maintenance	3
6	Parts List	6
7	Component Location and Schematic Diagrams	6

Table		
1	Parts List	7
2	Index of Manufacturers' Codes	16

Figure		
1	IF Filter Spectral Relationships	2
2	Test Setup for IF Amplifier Assemblies	4
3	Typical Fast and Slow AGC Voltage Curves	5
4	IF Amplifier Assembly	17
5	IF Amplifier PWB, Component Locations	17
6	IF Amplifier PWB, Schematic Diagram	17

1. GENERAL DESCRIPTION

The IF Amplifier Assemblies provide most of the receiver gain and AGC range. The standard RF-550 configuration has two IF amplifiers: USB (and AM or CW) IF Amplifier PWB Assembly A2A6A8, and LSB IF Amplifier PWB Assembly A2A6A7. In the 4 ISB version, separate UUSB and LLSB amplifier pw boards are also installed and are identified as A2A6A9 and A2A6A6, respectively. All IF amplifier pw boards differ only in the filter installed. Each amplifier contains an appropriate IF filter, amplifier, AGC circuit, and AM detector. USB IF Amplifier PWB Assembly A2A6A8 is used for AM reception, and, as a consequence, is the only board on which the AM detector is functional.

2. TECHNICAL CHARACTERISTICS

Weight:
5 ounces (141.7 grams)
w/Filter 14 oz. (388.76 gr.)

Dimensions:
4.875H x 5.05W (inches)
12.38H x 12.827W (cm)

Power Requirements:
+15 Vdc
-15 Vdc

Signal Inputs:
USB/UUSB, LSB/LLSB IF 1.75 MHz, -95 to -20 dBm

Signal Outputs:

AM Audio (A8)	22 mV
1.75 MHz IF	50 mV

Control Inputs:

AGC speed	0 or +15V slow
LSB/LLSB, USB/UUSB IF Enable	+15V
LSB/LLSB, USB/UUSB AGC	+15V
AGC to IF AMPS	0 to 9V
LSB/LLSB, USB/UUSB AGC out	0 to 9V
USB (A8)	+15V

3. SEMICONDUCTOR COMPLEMENT

REF. DESIG.	TYPE	DESCRIPTION
A2A6A6 through A2A6A9		
AR1	MC1458-CP1	Dual OP AMP
AR2 through AR4	741	OP AMP
CR1 through CR4	5082-3168	Diode
CR5 through CR8	1N3064	Diode
CR9 through CR12	5082-3081	Diode
CR13 through CR26	1N3064	Diode
Q1 through Q13	2N2222	Transistor, NPN
Q14	U1899E	Transistor, J-FET, N-Channel
VR1	1N4736A	Diode, Zener, 6.8V

4. CIRCUIT DESCRIPTION

Refer to figure 6, the schematic diagram, for the following circuit description. Note that differences between the USB, LSB, UUSB, and LLSB IF Amplifiers are presented in tabular form in figure 6. All four IF amplifiers are identical except for the filter installed at FL1. FL1 selects the desired range of frequencies from the total IF spectrum as shown in figure 1. AM and RTTY filters (located on IF Filter PW Board A2A6A10) are also shown in figure 1 to indicate relationships. AM or RTTY filters are not used in conjunction with sideband filters.

The standard RF-550 configuration uses a narrowband USB IF filter (Part No. 0759-3263) on assembly A2A6A8, and a narrowband LSB filter (Part No. 0759-3363) on assembly A2A6A7. Wideband filters (0759-3273 and 0759-3373) can also be used in the 2 ISB version. Special filters are installed on all four IF amplifier boards in the 4 ISB version, providing a bandpass of approximately 2.7 kHz for each channel. 4 ISB filter part numbers are 0759-3113, -3213, -3313, and -3413.

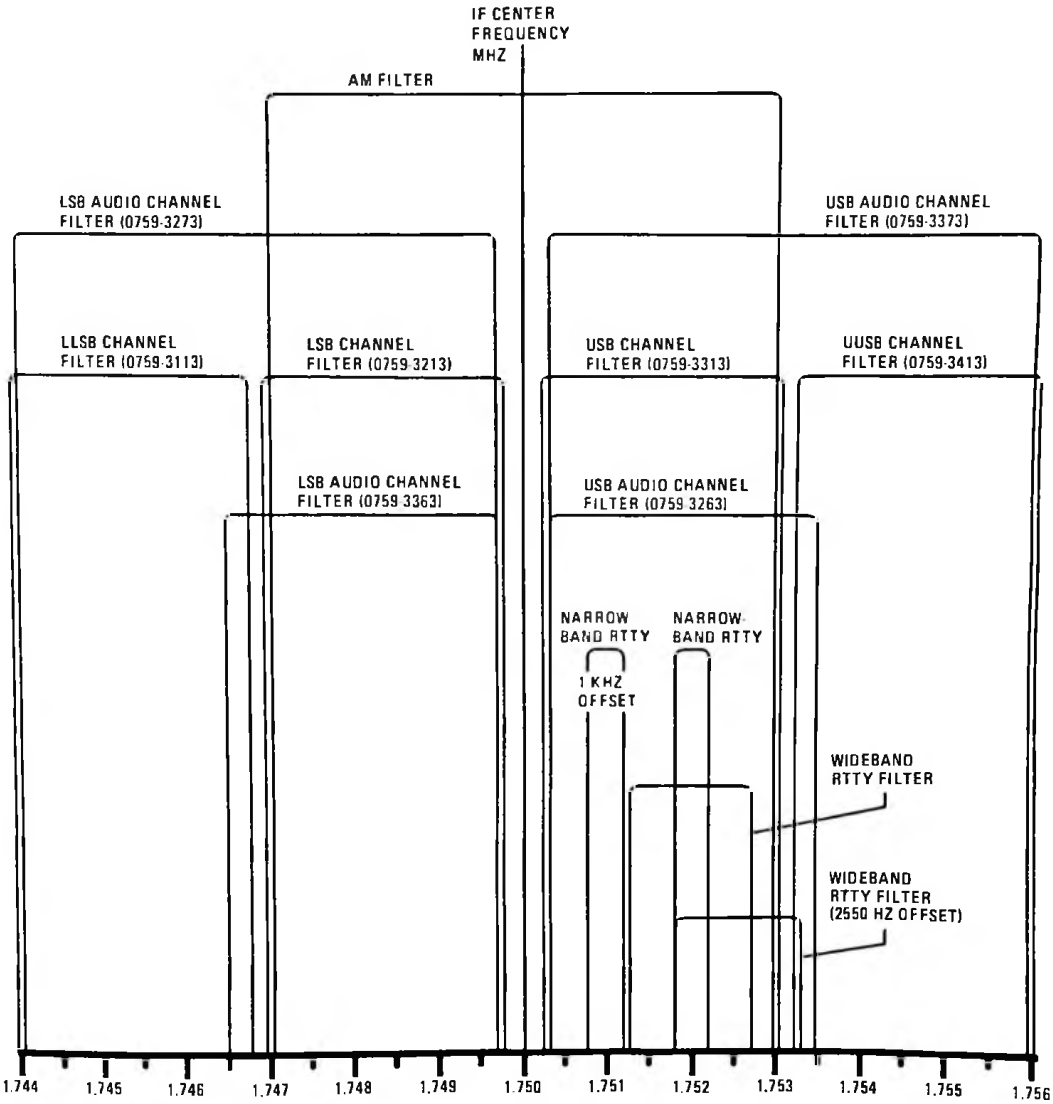

NOTE: THIS GRAPH IS INTENDED TO SHOW THE RELATIVE POSITIONS OF IF FILTER BANDPASS CHARACTERISTICS. VERTICAL PLOTS ARE FOR CLARITY OF PRESENTATION AND HAVE NO RELATIONSHIP TO INSERTION LOSS.

Figure 1. IF Filter Spectral Relationships

The RF/IF Assembly output is power-divided by four to drive up to four IF amplifiers simultaneously. The USB IF Amplifier input signal is routed through IF Filter Assembly A2A6A10 to accommodate AM, CW, or RTTY signals. In the USB mode, the USB IF signal is not filtered in assembly A2A6A10, but is attentuated 6 dB to provide for uniform levels. The total 1.75 MHz IF frequency spectrum is thus simultaneously available at input connector P3 on each IF amplifier installed in the receiver.

The IF input to each IF amplifier is amplified by Q1, which introduces a fixed gain of approximately 10 dB. Transformer T1 matches the 200-ohm output impedance of Q1 to the 50-ohm input impedance of either FL1 or the AM/CW signal path through CR3, CR4, and C13. In the SSB mode, +15 Vdc at P5-9 biases on CR1 and CR2, selecting FL1. FL1 selects the desired sideband as previously discussed. In the AM or CW modes, +15 Vdc is present at P5-8, and the path bypassing FL1 through CR3 and CR4 is selected. The discrete intelligence channel selected is introduced, through C12, to the cascaded IF amplifier chain comprising Q2 through Q7. R2, in the emitter circuit of Q3, is adjusted with AGC off for an overall assembly gain of 92 dB. R1 controls the delayed AGC output from AR4. The AGC voltage at TP1 is adjusted to +9 Vdc (using R1) with a signal level of +9 dBm at the RF-550 input and with the RF/IF AGC previously adjusted. R3 is subsequently adjusted to provide an AGC voltage of 4 Vdc at TP1 and a signal level of -67 dBm at the RF-550 input. Most of the RF-550 gain control is accomplished in the individual IF amplifiers. The output from each IF amplifier is a constant -13 dBm. AM signals are detected on the USB IF assembly. The base/emitter junction of Q9 functions as the AM detector. The detected audio signal is fed to Audio Output Assembly A2A6A2 after low pass filtering by C44, C45, and L15.

Q8 functions as a fixed gain buffer amplifier for AM detector Q9, and AGC detector Q10. The detected output of Q10 drives both sections of dual operational amplifier AR1 in parallel through CR25 and CR23. The AGC voltage developed through CR25, AR1, CR17, and CR26 has a fast attack characteristic. AGC hold can be controlled by the front panel AGC select switch for either FAST or SLOW decay characteristics. In the SLOW position Q11 is biased on and C52 is placed in parallel with C53 so that the time constant at this point is substantially increased. Similarly, when the AGC voltage at AR1-2 exceeds the reference established by voltage divider R74/R75, Q12 is biased off, and the resistive path for C56 to ground is switched from approximately 22K ohms through R79 to 10M ohms through R76.

AGC on-off control is accomplished through FET switch Q14. With +15 Vdc at P5-F, Q14 is biased on and AGC signals are fed to the delayed AGC circuit associated with AR4, and the AGC circuit associated with AR3. Outputs are adjusted as detailed in paragraph 5. VR1 in the AR3 output circuit limits the AGC output to Q3, Q4, and Q5 to 6.8 Vdc. Note that the switched AGC output from Q14 leaves each IF Amplifier board at P5-L, -H, and -J. The output at P5-L is available at TB3-11 on the rear panel; the P5-J output from each IF amplifier is routed through the FET switches on the Meter Calibrate PWB for RF level metering; and the P5-H output from each IF amplifier is routed to the "greater than" sensing diodes on the RF/IF Amplifier, where the highest AGC input is automatically selected to drive the RF/IF Amplifier AGC system.

5. MAINTENANCE

IF Amplifier Assemblies A2A6A6, A2A6A7, A2A6A8 and A2A6A9 can be tested and

adjusted in the RF-550 as described in the following procedure. This procedure is written for the A2A6A8 USB IF Amplifier; modify as noted for other IF amplifiers.

NOTE

This procedure presupposes that RF/IF Amplifier Assembly A2A5 has been previously adjusted.

a. Equipment Required:
- Signal Generator, HP-606 or equivalent.
- DC Digital Voltmeter
- RF Millivoltmeter, Boonton 91H or equivalent (with 50-ohm termination).
- Audio VM, HP 400F or equivalent
- Frequency Counter, Eldorado Model 1650
- Oscilloscope

b. Set up equipment as shown in figure 2. Switch power off on RF-550 during setup.

c. Remove Audio Output Assembly A2A6-A2 to measure USB IF output. Use BNC-to-SNAPON adapter from MRK (Maintenance Repair Kit) to make connection from A2A6-A2 connector P1, on chassis, to RF Millivoltmeter.

NOTE

Connect to A2A6A2 P3 to measure LSB IF output. For UUSB and LLSB IF output measurements, remove A2A6A3 Assembly and connect to P1 (UUSB) or P3 (LLSB), as appropriate.

d. Remove A2A6A8 USB IF Amplifier Assembly and reinstall using extender card from MRK. Connect digital voltmeter to measure AGC voltage at TP1 on A2A6A6, A2A6A7, A2A6A8, or A2A6A9, as appropriate.

e. Select or verify the following settings at the RF-550 front panel:

• RECEIVE MODE	USB (or as required)
• AGC	OFF
• TUNING MODE	FIXED
• MHZ	Any frequency
• RF GAIN	Fully clockwise
• AF GAIN	Power on

f. Adjust Signal Generator output to -116 dBm and to the frequency selected at RF-550 front panel, plus or minus the following:
- USB, +1 kHz
- LSB, -1 kHz
- UUSB, +5.29 kHz
- LLSB, -5.29 kHz

Verify Signal with oscilloscope ?

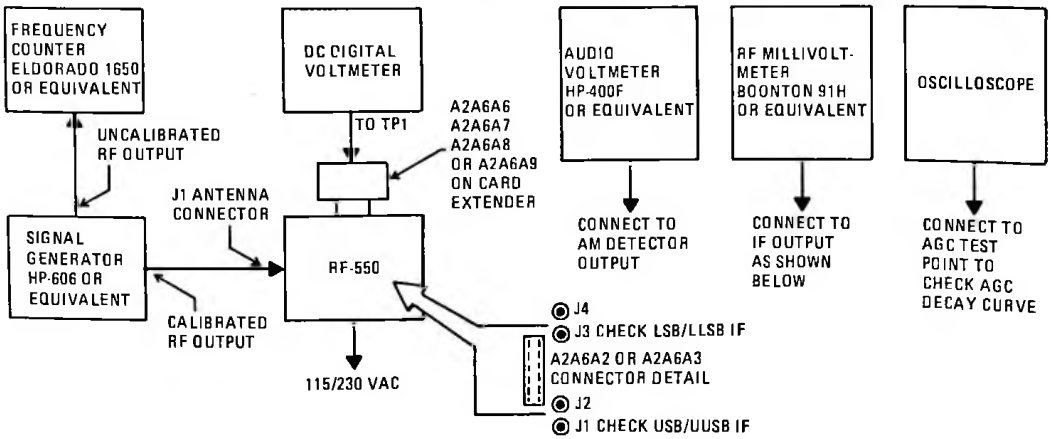

Figure 2. Test Setup for IF Amplifier Assemblies

g. Tune T2 for maximum output indication on the RF millivoltmeter, and adjust IF Amplifier gain potentiometer R2 for an output level of ~~-8~~ dBm. -13 dBm see fig 6.

h. Adjust delayed AGC range potentiometer R1 fully counterclockwise. Select FAST AGC at the front panel and increase signal generator output to -67 dBm.

i. Adjust AGC range potentiometer R3 for an AGC level of 4.00 ±0.05 Vdc, as indicated by digital voltmeter connected to TP1.

j. Increase signal generator output to +9 dBm and adjust delayed AGC range potentiometer R1 for an AGC level of 9 Vdc ±0.05V at TP1.

k. Switch AGC OFF at front panel and use front panel RF GAIN control to verify that an AGC range of 0 to 9V at TP1 causes an attenuation range of 135 dB.

l. Reduce signal generator output to -77 dBm and connect oscilloscope to AGC test point TP1. Switch AGC to FAST, and adjust RF GAIN to maximum clockwise.

NOTE

The dc level at this point will be 3.33 ± 0.1 Vdc. With a no-signal-condition, the voltage will be 0.1 ± 0.1 Vdc. Adjust the oscilloscope so that these two levels are conveniently displayed with a 0.1 s/cm time base.

m. Switch off RF input signal (or momentarily remove input coax) to observe AGC decay time on oscilloscope. Normal displays for both FAST and SLOW AGC conditions are shown in figure 3. AGC 90 percent rise time will be a nominal 10 ms for both conditions.

NOTE

The following steps check the AM detector function, and, as a consequence, apply to the A2A6A8 IF Amplifier Assembly only.

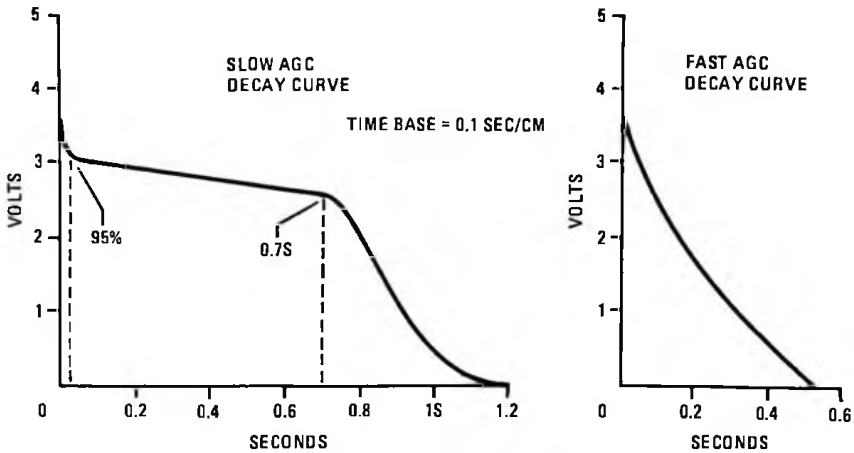

Figure 3. Typical Fast and Slow AGC Voltage Curves

n. Select AM at RECEIVE mode switch and adjust signal generator frequency to exact frequency indicated on RF-550 display. Amplitude modulate signal generator output 30 percent with a 1 kHz signal.

o. Connect audio voltmeter to P5-1 on USB IF Amplifier PWB Assembly. The indicated level at this point should be 22 mV, nominal.

p. This completes IF Amplifier Assembly tests; repeat applicable items for each IF Amplifier Assembly, as necessary.

6. PARTS LIST

Table 1 is a listing of parts in the IF Amplifier Assembly. Table 2 is an index of related manufacturers' codes.

7. COMPONENT LOCATION AND SCHEMATIC DIAGRAMS

Figure 4 through 6 at the end of this section contain component location and schematic diagrams for the IF Amplifier Assembly.

NOTICE

In some instances, the Integrated Circuit (IC) component types listed herein differ from those of the actual component. These components are physically and electronically interchangeable. Either type can be used for replacement purposes.

TABLE 1. PARTS LIST

REF DESIG	NOTES	NAME AND DESCRIPTION	FIG NO
A2A6		Card Cage Assembly: MFR 14304, PN 1920-1300	
A2A6A6 thru A2A6A9		IF Amplifier PWB Assembly: MFR 14304, PN 1920-2040	
AR1		Integrated Circuit: MFR 04713, PN MC1458CP1	
AR2 to AR4		Integrated Circuit: MFR 14304, PN D50-0001-003	
C1, C2		Capacitor, Fixed, Ceramic, 0.1 μF, ±20%, 50V: MFR 14304, PN C11-0005-104	
C3 to C5		Capacitor, Fixed, Tantalum, 1 μF, ±20%, 20V: MFR 12954, PN D1R0GSA20M	
C6 to C16		Capacitor, Fixed, Ceramic, 0.1 μF, ±20%, 50V: MFR 14304, PN C11-0005-104	
C17, C18		Capacitor, Fixed, Ceramic, 0.001 μF, ±20%, 50V: MFR 14304, PN C11-0005-102	
C19 to C21		Capacitor, Fixed, Ceramic, 0.1 μF, ±20%, 50V: MFR 14304, PN C11-0005-104	
C22, C23		Capacitor, Fixed, Ceramic, 0.001 μF, ±20%, 50V: MFR 14304, PN C11-0005-102	

REF DESIG	NOTES	NAME AND DESCRIPTION	FIG NO
C24		Capacitor, Fixed, Ceramic, 0.1 μF, ±20%, 50V: MFR 14304, PN C11-0005-104	
C25		Capacitor, Fixed, Tantalum, 10 μF, ±20%, 35V: MFR 12954, PN D10GSC35M	
C26		Capacitor, Fixed, Ceramic, 0.1 μF, ±20%, 50V: MFR 14304, PN C11-0005-104	
C27, C28		Capacitor, Fixed, Ceramic, 0.001 μF, ±20%, 50V: MFR 14304, PN C11-0005-102	
C29		Capacitor, Fixed, Ceramic, 0.1 μF, ±20%, 50V: MFR 14304, PN C11-0005-104	
C30		Capacitor, Fixed, Ceramic, 0.22 μF, ±20%, 50V: MFR 14304, PN C11-0005-224	
C31, C32		Capacitor, Fixed, Ceramic, 0.001 μF, ±20%, 50V: MFR 14304, PN C11-0005-102	
C33		Capacitor, Fixed, Mica, 470 pF, ±5%, 500V: MIL Type CMR06F471JODL	
C34		Capacitor, Fixed, Ceramic, 0.1 μF, ±20%, 50V: MFR 14304, PN C11-0005-104	

TABLE I. PARTS LIST (Cont)

REF DESIG	NOTES	NAME AND DESCRIPTION	FIG NO
C35		Capacitor, Fixed, Ceramic, 0.22 µF, ±20%, 50V: MFR 14304, PN C11-0005-224	
C36, C37		Capacitor, Fixed, Ceramic, 0.1 µF, ±20%, 50V: MFR 14304, PN C11-0005-104	
C38		Capacitor, Fixed, Tantalum, 1 µF, ±20%, 20V: MFR 12954, PN D1R0GSA20M	
C39		Capacitor, Fixed, Ceramic, 0.22 µF, ±20%, 50V: MFR 14304, PN C11-0005-224	
C40		Capacitor, Fixed, Ceramic, 0.1 µF, ±20%, 50V: MFR 14304, PN C11-0005-104	
C41		Capacitor, Fixed, Tantalum, 1 µF, ±20%, 20V: MFR 12954, PN D1R0GSA20M	
C42		Capacitor, Fixed, Tantalum, 10 µF, ±20%, 35V: MFR 12954, PN D10GSC35M	
C43		Capacitor, Fixed, Ceramic, 0.1 µF, ±20%, 50V: MFR 14304, PN C11-0005-104	
C44, C45		Capacitor, Fixed, Ceramic, 0.0047 µF, ±20%, 50V: MFR 14304, PN C11-0005-472	

REF DESIG	NOTES	NAME AND DESCRIPTION	FIG. NO.
C46		Capacitor, Fixed, Tantalum, 1 µF, ±20%, 20V: MFR 12954 PN D1R0GSA20M	
C47 to C50		Capacitor, Fixed, Ceramic, 0.1 µF, ±20%, 50V: MFR 14304, PN C11-005-104	
C51		Capacitor, Fixed, Ceramic, 0.001 µF, ±10%, 50V: MFR 72982, PN 8121-100-X7R-102K	
C52		Capacitor, Fixed, Tantalum, 10 µF, ±10%, 35V: MFR 12954, PN D10GSC35K	
C53		Capacitor, Fixed, Ceramic, 0.01 µF, ±10%, 50V: MFR 72982, PN 8121-100-X7R-102K	
C54		Capacitor, Fixed, Ceramic, 0.22 µF, ±10%, 50V: MFR 72982, PN 8131-050-X7R-224K	
C55		Capacitor, Fixed, Ceramic, 0.1 µF, ±10%, 50V: MFR 72982, PN 8131-050-X7R-104K	
C56		Capacitor, Fixed, Tantalum, 1 µF, ±10%, 20V: MFR 12954, PN D1R0GSA20K	
C57, C58		Capacitor, Fixed, Ceramic, 0.1 µF, ±20%, 50V: MFR 14304, PN C11-0005-104	
C59, C60		Capacitor, Fixed, Ceramic, 0.47 µF, ±20%, 50V: MFR 14304, PN C1T-0005-474	

TABLE 1. PARTS LIST (Cont)

REF DESIG	NOTES	NAME AND DESCRIPTION	FIG. NO.
C61		Capacitor, Fixed, Ceramic, .33 uF ± 20%, 50V: MFR14304 PN C-6518	
CR1 to CR4		Diode: MFR 28480, PN 5082-3168	
CR5 to CR8		Diode: Type 1N3064	
CR9 to CR12		Diode: MFR 28480, PN 5082-3081	
CR13 to CR26		Diode: Type 1N3064	
FL1		*See Page 15	
J1		Not Used	
J2, J3		Connector, Bulkhead, Subminiature: MFR 98291, PN 52-026-9120	
L1 to L11		Inductor, Fixed, RF, 1000 μH: MIL Type LT10K036	
L12		Inductor, Fixed, RF, 220 μH: MIL Type LT10K020	
L13		Inductor, Fixed, RF, 240 μH: MIL Type LT10K021	
L14		Inductor, Fixed, RF, 330 μH: MIL Type LT10K024	
L15		Inductor, Fixed, RF, 390 μH: MIL Type LT10K026	
L16		Inductor, Fixed, RF, 5600 μH: MIL Type LT10K054	
L17		Inductor, Fixed, RF, 1000 μH: MIL Type LT10K036	
L18		Inductor, Fixed, RF, 220 μH: MFR 99800 PN 1641-224	
P1		Not Used	
P2, P3		Connector, Coaxial: MFR 98291, PN 52-053-0000	
Q1 to Q13		Transistor, NPN: Type 2N2222	
Q14		Transistor, J-FET, N-Channel: MFR 17856, PN U1899RR	
R1		Resistor, Variable, 1K: MFR 80294, PN 3299X-1-102	
R2		Resistor, Variable, 100 ohms: MFR 80294, PN 3299X-1-101	
R3		Resistor, Variable 5K: MFR 80294, PN 3299X-1-502	
R4		Resistor, Fixed, Composition, 220 ohms, ±5%, 1/4W: MIL Type RCR07G221JM	
R5, R6		Resistor, Fixed, Composition, 10K, ±5%, 1/4W: MIL Type RCR07G103JM	
R7		Resistor, Fixed, Composition, 560 ohms, ±5%, 1/4W: MIL Type RCR07G561JM	

TABLE 1. PARTS LIST (Cont)

REF DESIG	NOTES	NAME AND DESCRIPTION	FIG. NO.
R8		Resistor, Fixed, Composition, 18 ohms, ±5%, 1/4W: MIL Type RCR07G180JM	
R9		Resistor, Fixed, Composition, 820 ohms, ±5%, 1/4W: MIL Type RCR07G821JM	
R10 to R12		Resistor, Fixed, Composition, 1.2K, ±5%, 1/4W: MIL Type RCR07G122JM	
R13		Resistor, Fixed, Composition, 10K, ±5%, 1/4W: MIL Type RCR07G103JM	
R14		Resistor, Fixed, Film, 1.8K, ±2%, 1/4W: MIL Type RL07S182G	
R15		Resistor, Fixed, Film, 10K, ±2%, 1/4W: MIL Type RL07S103G	
R16		Resistor, Fixed, Film, 7.5K, ±2%, 1/4W: MIL Type RL07S752G	
R17		Resistor, Fixed, Film, 2.4K, ±2%, 1/4W: MIL Type RL07S242G	
R18		Resistor, Fixed, Film, 5.1K, ±2%, 1/4W: MIL Type RL07S512G	
R19		Resistor, Fixed, Film, 20K, ±2%, 1/4W: MIL Type RL07S203G	

REF DESIG	NOTES	NAME AND DESCRIPTION	FIG. NO.
R20		Resistor, Fixed, Film, 10K, ±2%, 1/4W: MIL Type RL07S103G	
R21		Resistor, Fixed, Film, 220 ohms, ±2%, 1/4W: MIL Type RL07S221G	
R22		Resistor,Film, 33 ohms, ±2% 1/4W: MIL Type RL07S330G	
R23		Resistor, Fixed, Composition, 330 ohms, ±5%, 1/4W: MIL Type RCR07G331JM	
R24		Resistor, Fixed, Composition, 33 ohms, ±5%, 1/4W: MIL Type RCR07G330JM	
R25		Resistor, Fixed, Composition, 51 ohms, ±5%, 1/4W: MIL Type RCR07G510JM	
R26		Resistor, Fixed, Composition, 6.8K, ±5%, 1/4W: MIL Type RCR07G682JM	
R27		Resistor, Fixed, Composition, 12K, ±5%, 1/4W: MIL Type RCR07G123JM	
R28		Resistor, Fixed, Composition, 330 ohms, ±5%, 1/4W: MIL Type RCR07G331JM	

TABLE I. PARTS LIST (Cont)

REF DESIG	NOTES	NAME AND DESCRIPTION	FIG. NO.
R29		Resistor, Fixed, Composition, 33 ohms, ±5%, 1/4W: MIL Type RCR07G330JM	
R30		Resistor, Fixed, Composition, 12K, ±5%, 1/4W: MIL Type RCR07G123JM	
R31		Resistor, Fixed, Composition, 6.8K, ±5%, 1/4W: MIL Type RCR07G682JM	
R32		Resistor, Fixed, Composition, 390 ohms, ±5%, 1/4W: MIL Type RCR07G391JM	
R33		Resistor, Fixed, Composition, 15 ohms, ±5%, 1/4W: MIL Type RCR07G150JM	
R34		Resistor, Fixed, Composition, 330 ohms, ±5%, 1/4W: MIL Type RCR07G331JM	
R35		Resistor, Fixed, Composition, 12K, ±5%, 1/4W: MIL Type RCR07G123JM	
R36		Resistor, Fixed, Composition, 6.8K, ±5%, 1/4W: MIL Type RCR07G682JM	
R37		Resistor, Fixed, Film, 1K, ±2%, 1/4W: MIL Type RL07S102G	

REF DESIG	NOTES	NAME AND DESCRIPTION	FIG. NO.
R38		Resistor, Fixed, Composition, 470 ohms, ±5%, 1/4W: MIL Type RCR07G471JM	
R39		Resistor, Fixed, Composition, 12K, ±5%, 1/4W: MIL Type RCR07G123JM	
R40		Resistor, Fixed, Composition, 6.8K, ±5%, 1/4W: MIL Type RCR07G682JM	
R41		Resistor, Fixed, Composition, 33 ohms, ±5%, 1/4W: MIL Type RCR07G330JM	
R42		Resistor, Fixed, Composition, 470 ohms, ±5%, 1/4W: MIL Type RCR07G471JM	
R43		Resistor, Fixed, Composition, 680 ohms, ±5%, 1/4W: MIL Type RCR07G681JM	
R44		Resistor, Fixed, Film, 1K, ±2%, 1/4W: MIL Type RL07S102G	
R45, R46		Resistor, Fixed, Composition, 12K, ±5%, 1/4W: MIL Type RCR07G123JM	
R47		Resistor, Fixed, Film, 1K, ±2%, 1/4W: MIL Type RL07S102G	

TABLE 1. PARTS LIST (Cont)

REF DESIG	NOTES	NAME AND DESCRIPTION	FIG. NO.
R48		Resistor, Fixed, Composition, 33 ohms, ±5%, 1/4W: MIL Type RCR07G330JM	
R49		Not Used	
R50		Resistor, Fixed, Composition, 1K, ±5%, 1/4W: MIL Type RCR07G102JM	
R51, R52		Resistor, Fixed, Composition, 6.8K, ±5%, 1/4W: MIL Type RCR07G682JM	
R53		Resistor, Fixed, Composition, 100 ohms, ±5%, 1/4W: MIL Type RCR07G101JM	
R54		Resistor, Fixed, Composition, 470 ohms, ±5%, 1/4W: MIL Type RCR07G471JM	
R55		Resistor, Fixed, Composition, 47 ohms, ±5%, 1/4W: MIL Type RCR07G470JM	
R56		Resistor, Fixed, Composition, 100 ohms, ±5%, 1/4W: MIL Type RCR07G101JM	
R57		Resistor, Fixed, Composition, 6.8K, ±5%, 1/4W: MIL Type RCR07G682JM	

REF DESIG	NOTES	NAME AND DESCRIPTION	FIG. NO.
R58		Resistor, Fixed, Composition, 8.2K, ±5%, 1/4W: MIL Type RCR07G822JM	
R59		Resistor, Fixed, Composition, 68 ohms, ±5%, 1/4W: MIL Type RCR07G680JM	
R60		Resistor, Fixed, Composition, 680 ohms, ±5%, 1/4W: MIL Type RCR07G681JM	
R61		Resistor, Fixed, Composition, 560 ohms, ±5%, 1/4W: MIL Type RCR07G561JM	
R62		Resistor, Fixed, Composition, 27K, ±5%, 1/4W: MIL Type RCR07G273JM	
R63		Resistor, Fixed, Composition, 1K, ±5%, 1/4W: MIL Type RCR07G102JM	
R64		Resistor, Fixed, Composition, 1.3K, ±5%, 1/4W: MIL Type RCR07G132JM	
R65		Resistor, Fixed, Composition, 1K, ±5%, 1/4W: MIL Type RCR07G102JM	
R66		Resistor, Fixed, Film, 6.2K, ±2%, 1/4W: MIL Type RL07S622G	

TABLE 1. PARTS LIST (Cont)

REF DESIG	NOTES	NAME AND DESCRIPTION	FIG. NO
R67		Resistor, Fixed, Film, 47 ohms, ±2%, 1/4W: MIL Type RL07S470G	
R68		Resistor, Fixed, Composition, 27K, ±5%, 1/4W: MIL Type RCR07G273JM	
R69		Resistor, Fixed, Composition, 6.8K, ±5%, 1/4W: MIL Type RCR07G682JM	
R70		Resistor, Fixed, Composition, 10K, ±5%, 1/4W: MIL Type RCR07G103JM	
R71		Resistor, Fixed, Composition, 1K, ±5%, 1/4W: MIL Type RCR07G102JM	
R72		Resistor, Fixed, Film, 130K, ±2%, 1/4W: MIL Type RL07S134G	
R73		Resistor, Fixed, Composition, 220 ohms, ±5%, 1/4W: MIL Type RCR07G221JM	
R74		Resistor, Fixed, Film, 22K, ±2%, 1/4W: MIL Type RL07S223G	
R75		Resistor, Fixed, Film, 220 ohms, ±2%, 1/4W: MIL Type RL07S221G	

REF DESIG	NOTES	NAME AND DESCRIPTION	FIG. NO.
R76		Resistor, Fixed, Composition, 10M, ±5%, 1/4W: MIL Type RCR07G106JM	
R77		Resistor, Fixed, Composition, 10K, ±5%, 1/4W: MIL Type RCR07G103JM	
R78		Resistor, Fixed, Composition, 1K, ±5%, 1/4W: MIL Type RCR07G102JM	
R79		Resistor, Fixed, Film, 22K, ±2%, 1/4W: MIL Type RL07S223G	
R80		Resistor, Fixed, Composition, 4.7K, ±5%, 1/4W: MIL Type RCR07G472JM	
R81		Resistor, Fixed, Film, 33K, ±2%, 1/4W: MIL Type RL07S333G	
R82		Resistor, Fixed, Film, 6.2K, ±2%, 1/4W: MIL Type RL07S622G	
R83		Resistor, Fixed, Film, 270 ohms, ±2%, 1/4W: MIL Type RL07S271G	
R84		Resistor, Fixed, Film, 6.2K, ±2%, 1/4W: MIL Type RL07S622G	

TABLE 1. PARTS LIST (Cont)

REF DESIG	NOTES	NAME AND DESCRIPTION	FIG. NO.
R85		Resistor, Fixed, Film, 22K, ±2%, 1/4W: MIL Type RL07S223G	
R86		Resistor, Fixed, Film, 330 ohms, ±2%, 1/4W: MIL Type RL07S331G	
R87		Resistor, Fixed, Film, 22K, ±2%, 1/4W: MIL Type RL07S223G	
R88		Resistor, Fixed, Film, 27K, ±2%, 1/4W: MIL Type RL07S273G	
R89		Resistor, Fixed, Film, 6.2K, ±2%, 1/4W: MIL Type RL07S622G	
R90		Resistor, Fixed, Film, 82.5K, ±1% 1/8W: MIL Type RN55D8252F	
R91		Resistor, Fixed, Film, 1K, ±2%, 1/4W: MIL Type RL07S102G	
R92		Resistor, Fixed, Composition, 10K, ±5%, 1/4W: MIL Type RCR07G103JM	
R93		Resistor, Fixed, Composition, 100K, ±5%, 1/4W: MIL Type RCR07G104JM	
R94		Resistor, Fixed, Composition, 680 ohms, ±5%, 1/4W: MIL Type RCR07G681JM	
R95, R96		Resistor, Fixed, Film, 10K, ±2%, 1/4W: MIL Type RL07S103G	
R97		Resistor, Fixed, Film, 2.7K, ±2%, 1/4W: MIL Type RL07S272G	
R98		Resistor, Fixed, Film, 15K, ±2%, 1/4W: MIL Type RL07S153G	
R99		Resistor, Fixed, Film, 130K, ±2%, 1/4W: MIL Type RL07S134G	
R100		Resistor, Fixed, Film, 27K, ±2%, 1/4W: MIL Type RL07S273G	
R101		Resistor, Fixed, Film, 10K, ±1%, 1/8W: MIL Type RN55D1002F	
R102, R103		Resistor, Fixed, Composition, 10K, ±5%, 1/4W: MIL Type RCR07G103JM	
R104		Resistor, Fixed, Composition, 1K, ± 5%, 1/4W, MIL Type RCR07G102JM	
T1		Transformer Assembly: MFR 14304, PN 1976-3824	
T2		Transformer, IF, Tunable: MFR 14304, PN 1920-0620	

TABLE 1. PARTS LIST (Cont)

REF DESIG	NOTES	NAME AND DESCRIPTION	FIG. NO.
TP1		Test Point, Brown: MFR 74970, PN 105-1108-001	
TP2		Test Point, Red: MFR 74970, PN 105-1102-001	
TP3	4	Test Point, Orange: MFR 74970, PN 105-1106-001	
VR1		Diode, Zener: Type 1N4736A	
A2A6A6*	4	LLSB IF Amplifier Delay Compensating PWB Assembly (RF-562): MFR 14304, PN 1920-2050-7	
FL1		LLSB Channel Filter: MFR 14304, PN 0759-3113	
A2A6A7*	1	LSB IF Amplifier, PWB Assembly: MFR 14304, PN 1920-2050-1	
FL1		LSB Audio Channel Filter: MFR 14304, PN 0759-3363	
A2A6A7*	2	LSB IF Amplifier Wideband PWB Assembly (RF-563): MFR 14304, PN 1920-2050-3	
FL1		LSB Audio Channel Filter: MFR 14304, PN 7634-3020	
A2A6A7*	3	LSB IF Amplifier Delay Compensating PWB Assembly (RF-561): MFR 14304, PN 1920-2050-5	
FL1		LSB Audio Channel Filter: MFR 14304, PN 0759-3213	
A2A6A8*	1	USB IF Amplifier PWB Assembly: MFR 14304, PN 1920-2050-2	
FL1		USB Audio Channel Filter: MFR 14304, PN 0759-3263	
A2A6A8*	2	USB IF Amplifier Wideband PWB Assembly (RF-563): MFR 14304, PN 1920-2050-4	
FL1		USB Audio Channel Filter: MFR 14304, PN 7634-3010	
A2A6A8*	3	USB IF Amplifier Delay Compensating PWB Assembly (RF-561): MFR 14304, PN 1920-2050-6	
FL1		USB Audio Channel Filter: MFR 14304, PN 0759-3313	
A2A6A9*	4	UUSB IF Amplifier Delay Compensating PWB Assembly (RF-562): MFR 14304, PN 1920-2050-8	
FL1		UUSB Audio Channel Filter: MFR 14304, PN 0759-3413	

* NOTES: (1) Standard Configuration (2) RF-563 option (3) RF-561 option (4) RF-562 option

TABLE 2. INDEX OF MANUFACTURERS' CODES

MFR CODE	MFR NAME AND ADDRESS
04713	Motorola, Inc. Semiconductor Products Division 5005 East McDowell Road Phoenix, Arizona 85036
12954	Dickson Electronics Corp. 8700 East Thomas Road P.O. Box 1390 Scottsdale, Arizona 85252
14304	Harris Corporation RF Communications Division 1680 University Ave. Rochester, New York 14610
17856	Siliconix, Inc. 2201 Laurelwood Road Santa Clara, California 95054
28480	Hewlett-Packard Co. Corporate Headquarters 1501 Page Mill Road Palo Alto, California 94304
72982	Erie Technological Products Inc. 644 W. 12th St. Erie, PA 16512
74970	Johnson E.F. Co., Inc. 299 10th Avenue, Southwest Waslca, Minnesota 56093
80294	Bourns, Inc. Instrument Division 6135 Magnolia Ave. Riverside, California 92506
98291	Sealectro Corp. 225 Hoyt Mamaroneck, New York 10544
99800	American Precision Industries, Inc. Delevan Division 270 Quaker Road East Aurora, New York 14052

NOTES:

1. Unless Otherwise specified:
   A. All Resistors are 1/4W, 5%.
   B. All Capacitors are in microfarads.
   C. All Diodes are 1N3064
   D. All Inductors are in microhenries.
   E. All Transistors are 2N2222.
2. Prefix all Reference Designations per Table 1.

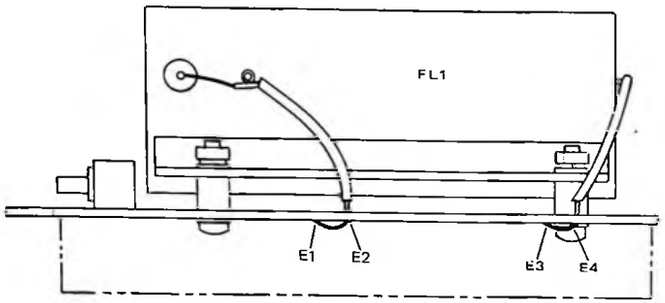

Figure 4. IF Amplifier Assembly

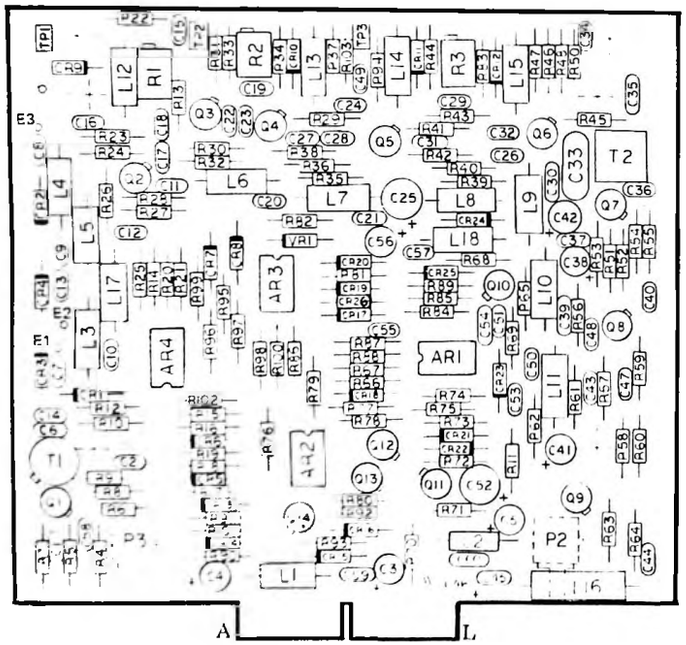

Figure 5. IF Amplifier PWB, Component Locations

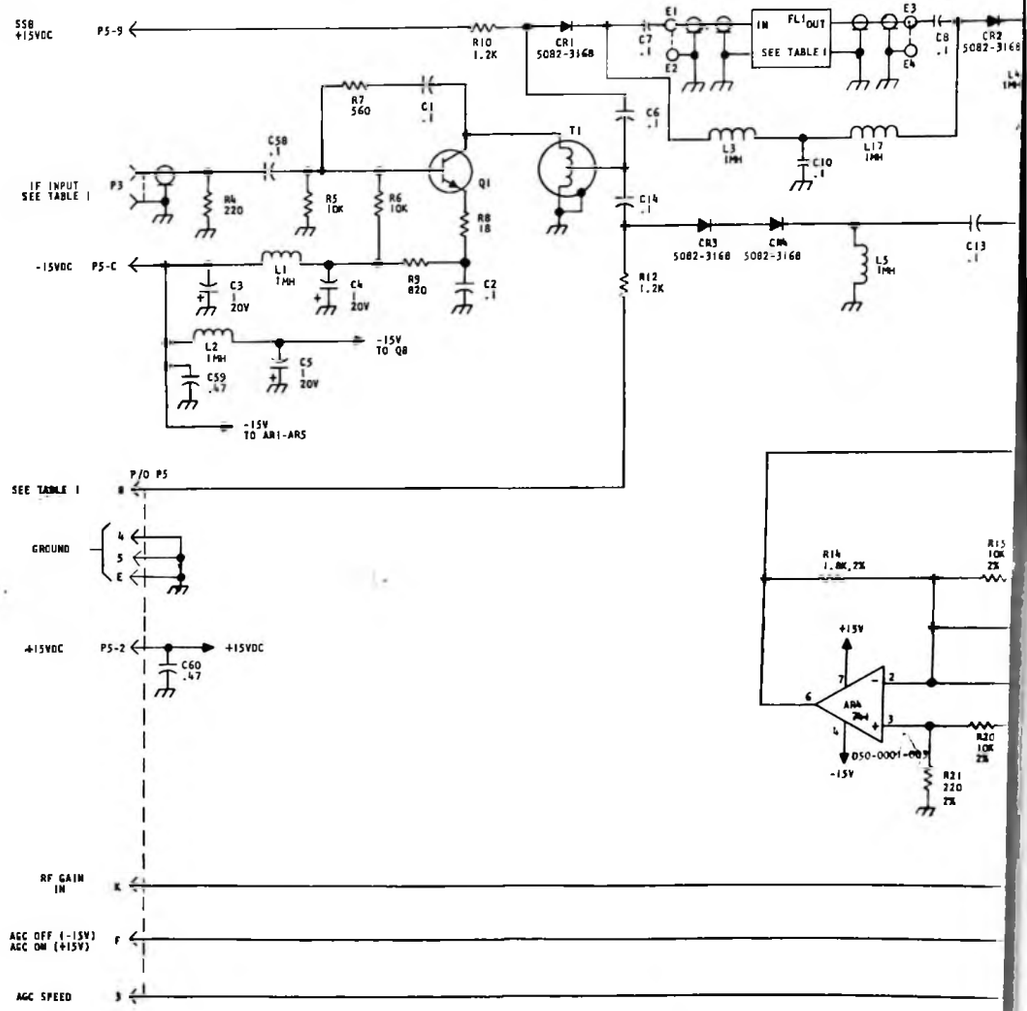

-116
+93

NO'

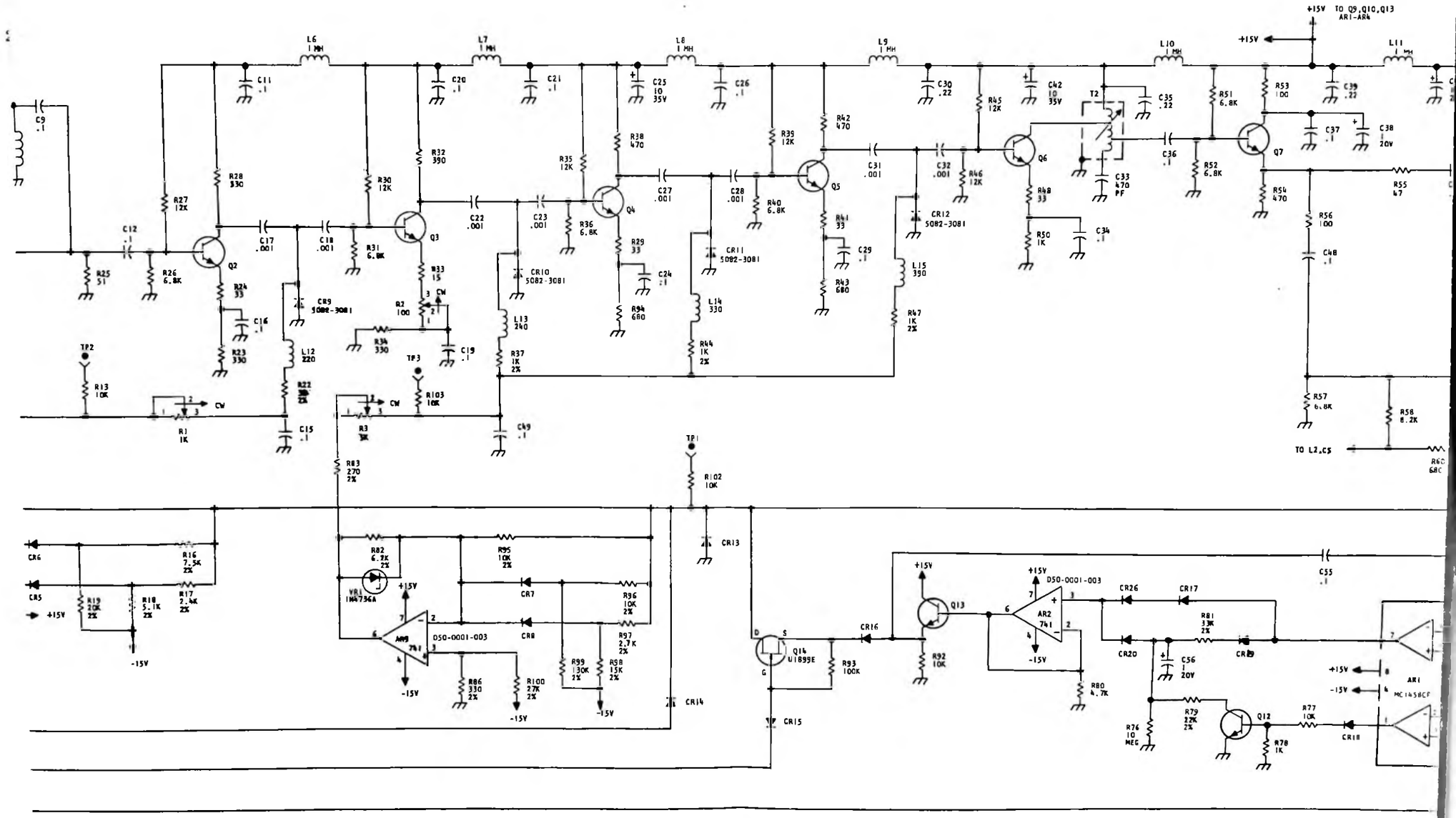

+15V TO Q9,Q10,Q13 AR1-AR4
L6 1 MH
L7 1 MH
L8 1 MH
L9 1 MH
L10 1 MH
L11 1 MH
C9 .1
C11 .1
C20 .1
C21 .1
C25 10 35V
C26 .1
C30 .22
C42 10 35V
C35 .22
C39 .22
C37 .1
C38 1 20V
C12 .1
C17 .001
C18 .001
C22 .001
C23 .001
C27 .001
C28 .001
C31 .001
C32 .001
C36 .1
C33 470 PF
C34 .1
C29 .1
C24 .1
C16 .1
C15 .1
C19 .1
C48 .1
C49 .1
C55 .1
C56 1 20V
R27 12K
R28 330
R30 12K
R32 390
R35 12K
R38 470
R39 12K
R42 470
R45 12K
R46 12K
R48 33
R50 1K
R51 6.8K
R52 6.8K
R53 100
R54 470
R55 47
R56 100
R57 6.8K
R58 8.2K
R25 51
R26 6.8K
R24 33
R23 330
R31 6.8K
R33 15
R36 6.8K
R29 33
R94 680
R40 6.8K
R41 33
R43 680
R47 1K 2%
R44 1K 2%
R37 1K 2%
R103 10K
R102 10K
R83 270 2%
R82 6.2K 2%
R95 10K 2%
R96 10K 2%
R97 2.7K 2%
R99 130K 2%
R98 15K 2%
R86 330 2%
R100 27K 2%
R16 7.5K 2%
R17 2.4K 2%
R18 5.1K 2%
R19 20K 2%
R93 100K
R92 10K
R80 4.7K
R79 22K 2%
R76 10 MEG
R77 10K
R78 1K
R81 33K 2%
R22 2%
R1 1K
R3 3K
R2 100
R34 330
R13 10K
R15 390
R14 330
R46 12K
R51 6.8K
R52 6.8K
R54 470
R55 47
R56 100
R57 6.8K
R58 8.2K
TO L2,C5
TP1
TP2
TP3
CR6
CR5
CR7
CR8
CR10 5082-3081
CR11 5082-3081
CR12 5082-3081
CR13
CR14
CR15
CR16
CR17
CR18
CR19
CR20
CR26
VR1 1N4736A
AR9 741
AR2 741
D50-0001-003
Q2
Q3
Q4
Q5
Q6
Q7
Q12
Q13
Q14 U1899E
AR1 MC1458CP
+15V
-15V
CW

TABLE 1							
ASSEMBLY	FL1	TITLE	CONFIGURATION	REFERENCE DESIGNATION	P5-1	P5-8	DESIGNATION FOR P2 & P3
1920-2050-1	0759-3363	LSB STD.	RF-550	1.75 MHZ LSB IF	NOT USED	NOT USED	A2A6A7
1920-2050-2	0759-3263	USB STD.	RF-550	1.75 MHZ USB IF	AM AUDIO	USB	A2A6A8
1920-2050-3	7634-3020	LSB WIDE – BAND	RF-550 RF-563 OPTION	1.75 MHZ LSB IF	NOT USED	NOT USED	A2A6A7
1920-2050-4	7634-3010	USB WIDE – BAND	RF-550 RF-563 OPTION	1.75 MHZ USB IF	AM AUDIO	USB	A2A6A8
1920-2050-5	0759-3213	LSB DELAY COMP.	RF-550 RF-561 OPTION	1.75 MHZ LSB IF	NOT USED	NOT USED	A2A6A7
1920-2050-6	0759-3313	USB DELAY COMP.	RF-550 RF-561 OPTION	1.75 MHZ USB IF	AM AUDIO	USB	A2A6A8
1920-2050-7	0759-3113	LLSB DELAY COMP.	RF-550 RF-562 OPTION	1.75 MHZ LLSB IF	NOT USED	NOT USED	A2A6A6
1920-2050-8	0759-3413	UUSB DELAY COMP.	RF-550 RF-562 OPTION	1.75 MHZ UUSB IF	NOT USED	NOT USED	A2A6A9

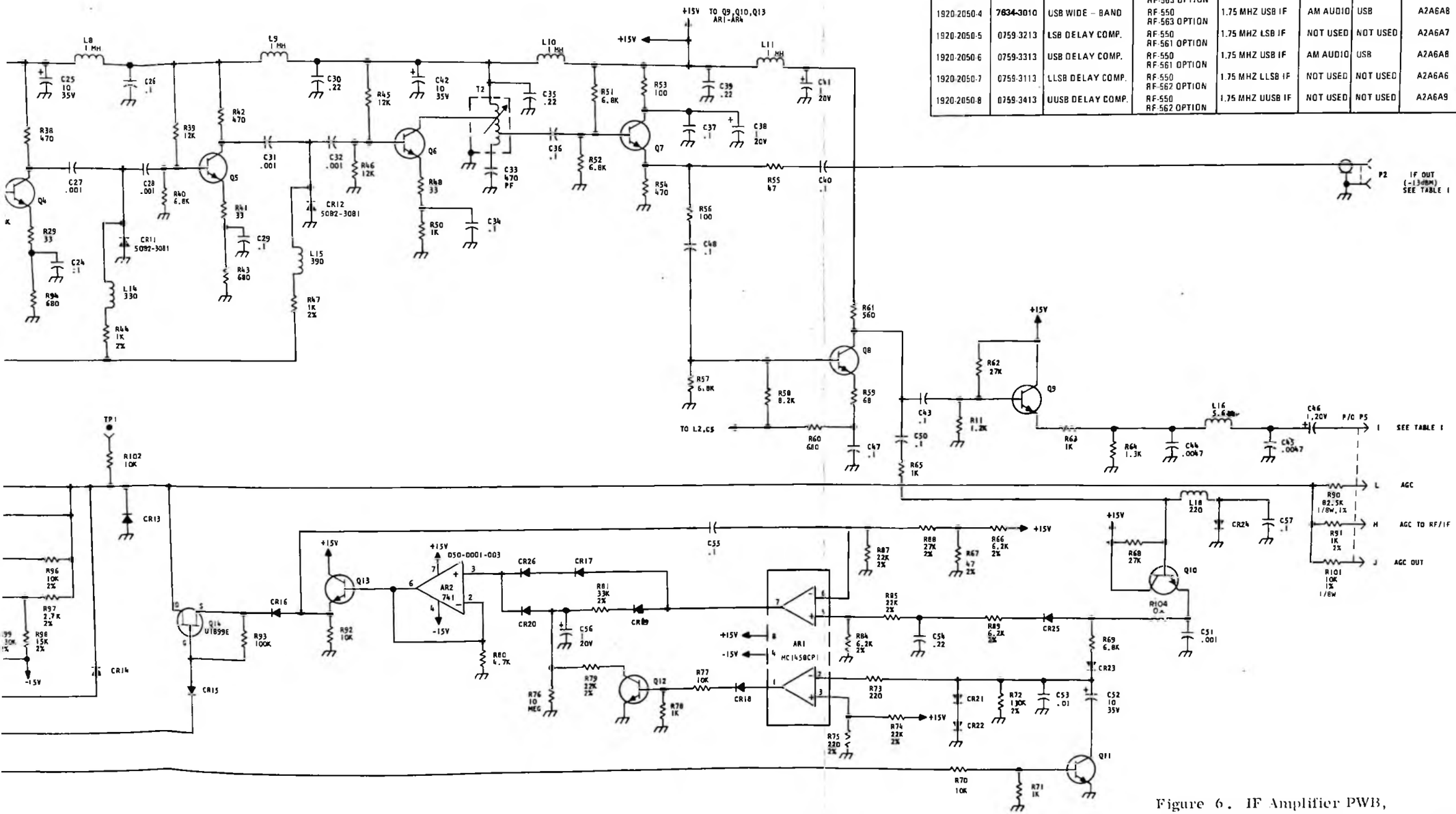

Figure 6. IF Amplifier PWB, Schematic Diagram

A2A6A10

UNIT INSTRUCTIONS

IF FILTER ASSEMBLY

A2A6A10

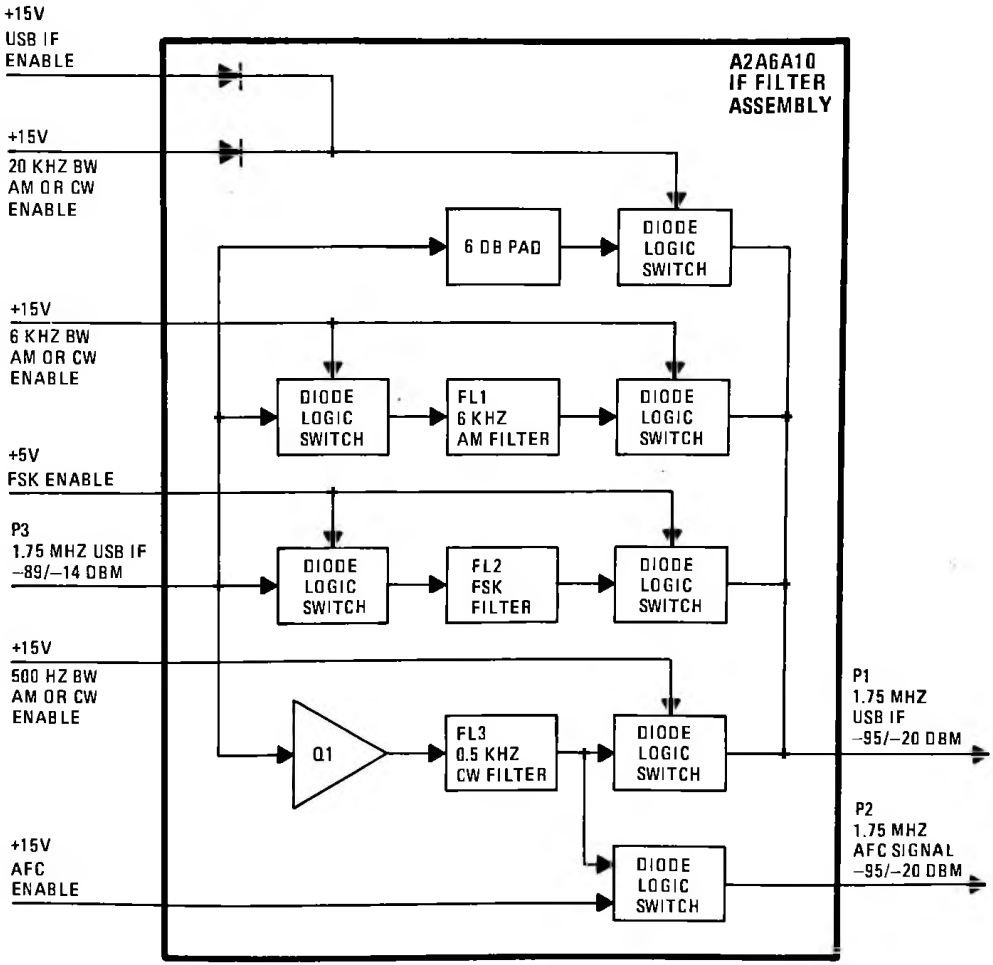

TABLE OF CONTENTS

A2A6A10

Paragraph		Page
1	General Description	1
2	Technical Characteristics	1
3	Semiconductor Complement	1
4	Circuit Description	1
5	Maintenance	2
6	Parts List	3
7	Component Location and Schematic Diagrams	3

Table		
1	Parts List	4
2	Index of Manufacturers' Codes	5

Figure		
1	Test Setup, Assembly A2A6A10	2
2	IF Filter PWB Component Locations	7
3	IF Filter PWB Schematic Diagram	7

1. GENERAL DESCRIPTION

IF filter Assembly A2A6A10 contains three bandpass filters which determine IF bandpass characteristics in the AM, CW, and FSK modes of operation. Steering diodes controlled by the RECEIVE MODE and KHZ BANDWIDTH switches on the RF-550 front panel route the IF signal through the appropriate filter. All three filters are automatically bypassed in the USB, 2 ISB and 4 ISB modes. The filters are also bypassed if 20 KHZ bandwidth is selected in the CW or AM modes. A 6 dB pad in the bypass circuit maintains the same output level in the non-filtered modes as in the filtered modes, by approximating the insertion loss of the filters. When the AFC mode is selected, a separate 1.75 MHz IF carrier signal is provided to the AFC circuits on Assembly A2-A6A5 for use in AFC detection.

2. TECHNICAL CHARACTERISTICS

Weight:
7 ounces (198 grams)

Dimensions:
4.875H x 5.05W (inches)
12.38H x 12.827W (cm)

Power Requirement:
-15 Vdc

Signal Input:
1.75 MHz (USB IF) -89 to -14 dBm

Signal Outputs:
1.75 MHz (USB IF) -95 to -20 dBm
1.75 MHz (AFC IF) -127 to -20 dBm

Control Inputs:

USB IF Enable	+15V = on, -15V = off
FSK Filter Enable	+15V = on, -15V = off
6 kHz BW AM or CW Enable	+15V = on, -15V = off
20 kHz BW AM or CW Enable	+15V = on, -15V = off
500 Hz BW AM or CW Enable	+15V = on, -15V = off
AFC Enable	+15V = on, -15V = off

3. SEMICONDUCTOR COMPLEMENT

REF. DESIG.	TYPE	DESCRIPTION
A2A6A10		
CR1 through CR10	1N3064	Diode
Q1	2N2222	Transistor, NPN

4. CIRCUIT DESCRIPTION

Figure 3 is a schematic diagram of the IF Filter PWB Assembly. The input to the assembly is the 1.75 MHz IF signal from RF/IF Assembly A2A5. Internal routing of the IF signal is controlled by diode switching in response to control voltages at P5-L, -H, -J, -K, -C, and -A. Selection of the desired signal path through this assembly is controlled by front panel RECEIVE MODE and KHZ BANDWIDTH switches or from similar switches in remote control systems.

In USB, 2 ISB, or 4 ISB modes, +15 Vdc is present at P5-L. This voltage is applied through CR1 to bias on CR3 and CR4, and select the signal path through the attenuator consisting of R2 and R7. This signal path bypasses all filters on the IF filter Assembly and functions as a 6 dB pad to approximate the insertion loss otherwise introduced by one of the filters. Selection of the 20 KHZ BANDWIDTH position in CW or AM modes causes +15 Vdc to be presented at P5-H, with the same bypass effect.

In the 6 kHz AM or CW modes, +15 Vdc at P5-J biases on CR5 and CR6 through L2 and L3 placing 6 kHz bandpass filter FL1 in the AM or CW signal path. Similarly, in the FSK mode, +15 Vdc at P5-K biases on CR7 and CR8 and selects FSK filter FL2. Filter FL2 is not installed in the standard RF-550. If the RF-564 Wide Band Filter option is used, an 850 Hz shift (1.2 kHz, 3 dB bandwidth) filter is installed as FL2.

If the RF-565 Narrow Band Filter option is used, a 170 Hz shift (0.4 kHz, 3 dB bandwidth) filter is installed as FL2. If the RF-566 Wide and Narrow Band RATT filter option is used, Assembly A2A6A10 is replaced with a pwb (1920-2020) that accommodates both filters.

+15 Vdc will be present at P5-C in the AM or CW modes when 0.5 kHz bandwidth is selected. This control voltage biases on CR9 and directs the filtered output of FL3 through C14, C10, and C13, to P1. Q1 functions as an emitter follower to buffer the input to FL3.

When AFC operation is selected, +15 Vdc at P5-A biases on CR10 to steer the output of FL3 to P2 for use in AFC detection on Assembly A2A6A5.

5. MAINTENANCE

There are no adjustments on Assembly A2-A6A10. The following procedure measures the overall performance of the IF Filter Assembly.

a. Equipment required.

- Signal Generator, HP-606 or equivalent
- Frequency Counter, Eldorado Model 650 or equivalent
- RF Millivoltmeter, Boonton 91H or equivalent

b. Set up equipment as shown in figure 1.

c. Turn on the RF-550 and, in the FIXED TUNING MODE, select a receiver frequency of 10 MHz.

NOTE

Any frequency within the range of the receiver can be used for this test provided that input frequencies are changed accordingly.

d. Position or verify other RF-550 controls as follows:

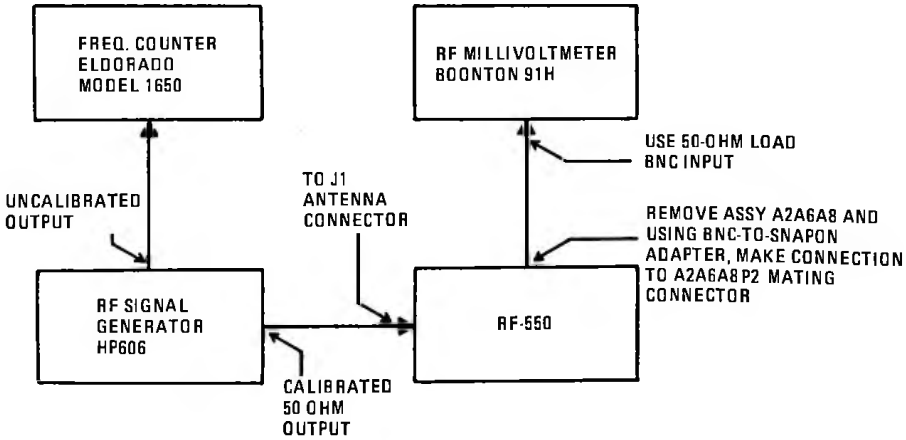

Figure 1. Test Setup, Assembly A2A6A10

- Verify LOCAL control
- RECEIVE MODE to AM
- KHZ BANDWIDTH to 20
- AGC to OFF
- RF GAIN, fully clockwise
- AF GAIN, any Power On position

e. At the signal generator, verify modulation off, adjust output frequency to exactly 10 MHz, and adjust output level to -50 dBm.

f. The RF millivoltmeter connected to the IF Filter Assembly output (USB IF Amplifier input), should read -29 dBm ±1 dB (-50 dBm into the receiver, -4 dB insertion loss through Input Filter Assembly A2A4, +31 dB through RF/IF Assembly A2A5, and -6 dB through 6 dB pad signal path on IF Filter Assembly A2A6A10). Varying the input signal ±10 kHz from this frequency should not change the indicated output by more than ±2 dB.

g. Repeat step f with RECEIVE MODE switch in USB, 2 ISB, and (if optionally available) 4 ISB. Results should be identical.

h. At RECEIVE MODE and KHZ BANDWIDTH switches, select AM and 6 KHZ BANDWIDTH.

i. Adjust signal generator output to exactly 10 MHz and note output level on RF millivoltmeter. Output should be -29 dBm ±1 dB with -50 dBm at the receiver input. Varying input frequency ±3 kHz should not vary output more than 3 dB. Varying output beyond ±3.3 kHz should produce sharp reduction in output.

j. Select CW mode and repeat step i; results should be the same as those obtained in AM mode.

k. Select 0.5 kHz bandwidth and adjust signal generator output to exactly 10 MHz, as in steps e and i. Output indicated on RF millivoltmeter should again be -29 dBm ±1 dB. Vary input frequency ±225 Hz. Output should remain constant within 3 dB. Varying output beyond ±250 Hz should produce sharp reduction in output.

l. Momentarily remove power, pull out AFC IF Assembly A2A6A5, and connect RF millivoltmeter to A2A6A5P2 mating connector, using BNC-to-SNAPON adapter.

m. At TUNING MODE switch, select AFC mode and repeat procedure as detailed in step k. This step verifies the AFC IF output from the IF Filter Assembly.

n. This completes checkout of the IF Filter Assembly. Remove power and replace all items removed for this procedure.

6. PARTS LIST

Table 1 lists replaceable parts on Assembly A2A6A10. Table 2 is an index of manufacturers' codes.

7. COMPONENT LOCATION AND SCHEMATIC DIAGRAMS

Figure 2 and 3 are component location and schematic diagrams for the IF Filter Assembly.

NOTICE

In some instances, the Integrated Circuit (IC) component types listed herein differ from those of the actual component. These components are physically and electronically interchangeable. Either type can be used for replacement purposes.

TABLE 1. PARTS LIST

REF DESIG	NOTES	NAME AND DESCRIPTION	FIG. NO.
A2A6A10*		IF Filter PWB Assembly: MFR 14304, PN 1920-2080-1	
C1 to C10		Capacitor, Fixed, Ceramic, 0.1 µF, ±20%, 50V: MFR 14304, PN C11-0005-104	
C11		Capacitor, Fixed, Ceramic, 0.22 µF, ±20%, 50V: MFR 14304, PN C11-0005-224	
C12 to C14		Capacitor, Fixed, Ceramic, 0.1 µF, ±20%, 50V: MFR 14304, PN C11-0005-104	
C15		Capacitor, Fixed, Ceramic, 0.22 µF, ±20%, 50V: MFR 14304, PN C11-0005-224	
C16		Capacitor, Fixed, Ceramic, 0.47 µF, ±20%, 50V: MFR 14304, PN C11-0005-474	
C17 to C25		Capacitor, Fixed, Ceramic, 0.1 µF, ±20%, 50V: MFR 14304, PN C11-0005-104	
CR1 to CR10		Diode: Type 1N3064	
FL1		Filter, AM: MFR 14304, PN 1920-0604	
FL2		Not Used	
FL3		Filter, 500 Hz, CW: MFR 14304, PN 1920-0603	
J1 to J3		Connector, Bulkhead, Subminiature: MFR 98291, PN 52-026-9120	
L1 to L9		Inductor, Fixed, RF, 1000 µH: MIL Type LT10K036	
P1 to P3		Connector, Coaxial: MFR 98291, PN 52-053-0000	
Q1		Transistor, NPN: Type 2N2222	
R1		Resistor, Fixed, Composition, 1K, ±10%, 1/4W: MIL Type RCR07G102KM	
R2		Resistor, Fixed, Composition, 22 ohms, ±10%, 1/4W: MIL Type RCR07G220KM	
R3 to R6		Resistor, Fixed, Composition, 1K, ±10%, 1/4W: MIL Type RCR07G102KM	
R7		Resistor, Fixed, Composition, 22 ohms, ±10%, 1/4W: MIL Type RCR07G220KM	
R8, R9		Resistor, Fixed, Composition, 10K, ±10%, 1/4W: MIL Type RCR07G103KM	
R10		Resistor, Fixed, Composition, 470 ohms, ±10%, 1/4W: MIL Type RCR07G471KM	
R11		Resistor, Fixed, Composition, 47 ohms, ±10%, 1/4W: MIL Type RCR07G470KM	

TABLE 1. PARTS LIST (Cont)

REF DESIG	NOTES	NAME AND DESCRIPTION	FIG. NO.
FL2		*RF-565 170 Hz Shift RATT Filter Option: MFR 14304, PN 1920-2080-2 1.75 MHz Narrow Band RTTY Filter: MFR 14304 PN 1920-0618	

REF DESIG	NOTES	NAME AND DESCRIPTION	FIG. NO.
FL2		*RF-564 850 Hz Shift RATT Filter Option: MFR 14304, PN 1920-2080-3 1.75 MHz Wideband RTTY Filter: MFR 14304, PN 1920-0614	

TABLE 2. INDEX OF MANUFACTURERS' CODES

MFR CODE	MFR NAME AND ADDRESS
14304	Harris Corporation RF Communications Division 1680 University Avenue Rochester, New York 14610
98291	Sealectro Corporation 225 Hoyt Mamaroneck, New York 10544

NOTES:

1. ALL RESISTORS ARE 1/4W, 10%, UNLESS OTHERWISE SPECIFIED.
2. ALL DIODES ARE 1N3064.
3. ALL CHOKES ARE IN MH.
4. ALL CAPACITORS ARE IN UF.
5. USE 1920-0614 FILTER FOR RF-564 OPTION. 1.75 MHZ WIDEBAND (850 HZ)
   USE 1920-0618 FILTER FOR RF-565 OPTION. 1.75 MHZ NARROWBAND (170 HZ)
6. PREFIX ALL REF DESIGNATIONS WITH A2A6A10.

PART NO.	NEXT ASSY	USED ON
1920-2080-1	1920-1000 1920-2080-2 1920-2080-3	RF-550
1920-2080-2	1920-0006	RF-565
1920-2080-3	1920-0005	RF-564

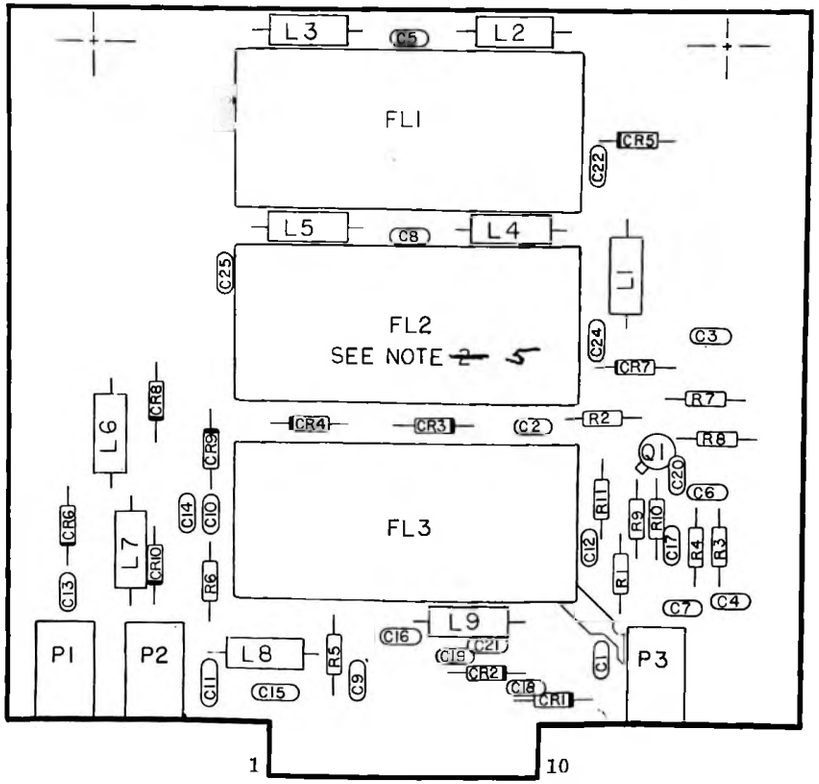

Figure 2. IF Filter PWB Component Locations

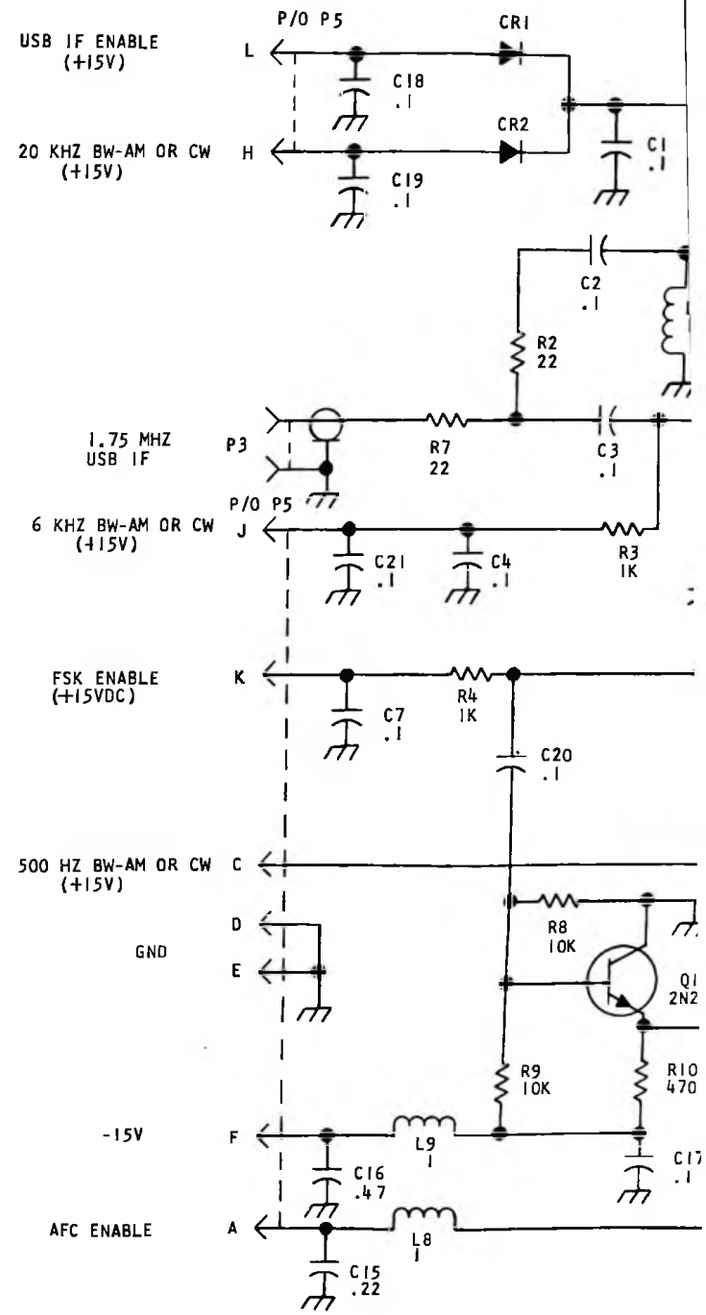

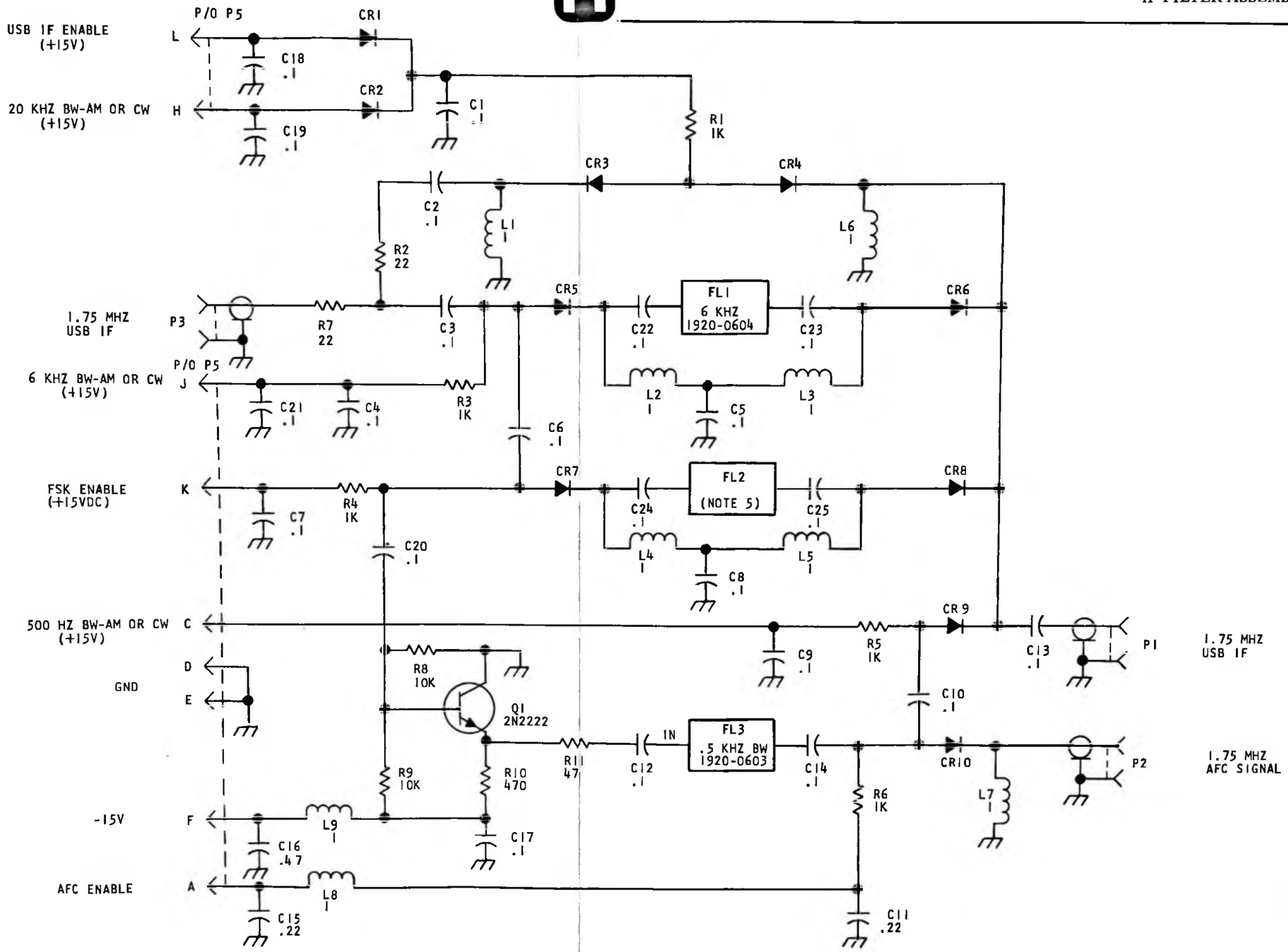

Figure 3. IF Filter PWB Schematic Diagram

A2A7

No extender cable available

UNIT INSTRUCTIONS

FREQUENCY STANDARD ASSEMBLY

A2A7

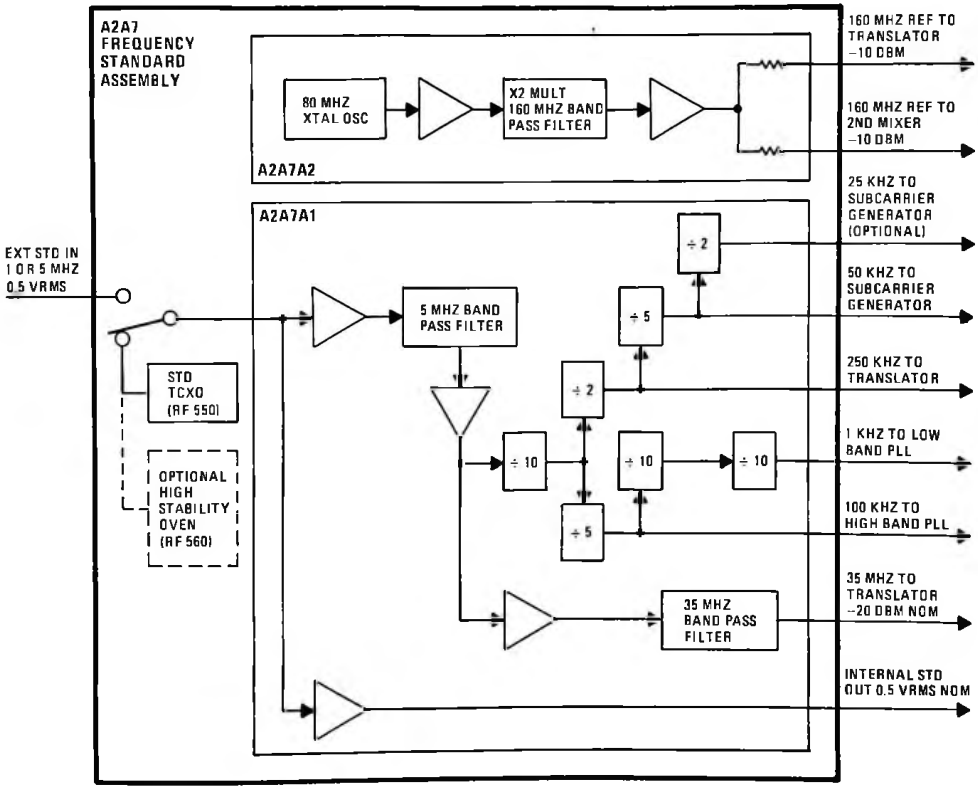

TABLE OF CONTENTS

A2A7

Paragraph		Page
1	General Description	1
2	Technical Characteristics	1
3	Semiconductor Complement	2
4	Circuit Description	2
5	Maintenance	3
5.1	Reference Generator PWB Assembly A2A7A1 Test and Adjustment Procedures	3
5.2	160 MHz Generator PWB A2A7A2 Test and Adjustment Procedures	4
6	Parts List	5
7	Component Locations and Schematic Diagrams	5

Table		
1	Characteristics of 5 MHz and 35 MHz Bandpass Filters	2
2	Parts List	6
3	Index of Manufacturers' Codes	12

Figure		
1	Frequency Standard Assembly A2A7 Reference Frequency Outputs	1
2	Reference Generator PWB Assembly Test Setup Diagram	3
3	160 MHz Generator PWB Assembly Test Setup Diagram	4
4	Frequency Standard Options	13
5	Frequency Standard Assembly, Component Locations	13
6	Reference Generator PWB Assembly, Component Locations	13
7	Frequency Standard Assembly, Schematic Diagram	13
8	160 MHz Generator PWB Assembly, Component Locations	15

1. GENERAL DESCRIPTION

Frequency Standard Assembly A2A7 generates the reference frequencies shown in figure 1. The reference frequencies are generated internally from either a 5 MHz temperature compensated crystal oscillator (TCXO) or an optional 1 MHz oven-controlled standard. An external 1 or 5 MHz standard, with a nominal level of 0.5 Vrms, may also be used. Toggle switch S1 (figure 5) is used to select either the external or internal standard. Frequency stability of the 5 MHz TCXO is ± 1 part in 10^6. Stability of the optional 1 MHz oven-controlled standard is ± 1 part in 10^8. Assembly A2A7 contains two printed wiring boards in addition to either the TCXO or the optional oven-controlled standard (figure 7, sheet 1).

2. TECHNICAL CHARACTERISTICS

Weight:
1 pound, 4 ounces (566.9 grams)

Dimensions:
4.90H x 4.19W x 4.32D (inches)
12.45H x 10.64W x 10.79D (cm)

Power Requirements:
+5Vdc
+15Vdc
-15Vdc
+24Vdc

Signal Inputs:
1 or 5 MHz, 0.5 Vrms (External Frequency Standard)

Signal Outputs:
160 MHz; -10 dBm
50 KHz TTL
250 KHz TTL
1 KHz TTL
100 KHz TTL
35 MHz; -20 dBM (nom)

Internal Standard Output (1 or 5 MHz):
0.5 Vrms (Nominal)

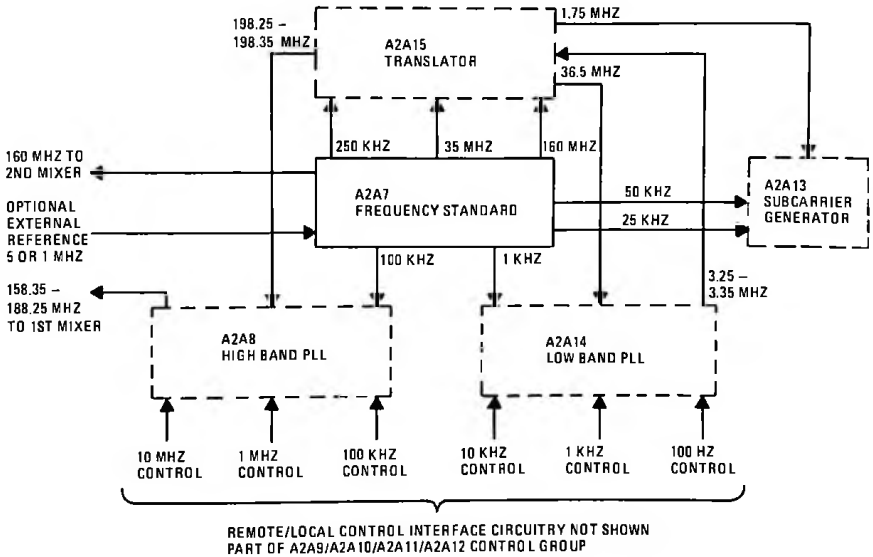

Figure 1. Frequency Standard Assembly A2A7 Reference Frequency Outputs

3. SEMICONDUCTOR COMPLEMENT

REF. DESIG.	TYPE	DESCRIPTION
A2A7A1		
Q1 through Q3	2N2222	Transistor, NPN
Q4	2N5179	Transistor, NPN
U1	SN7490AN	Decade Counter
U2 through U4	SN74L90N	Decade Counter
U5	SN7400N	Quad 2-Input NAND
U6	SN74L90N	Decade Counter
A2A7A2		
Q1 & Q3	2N3563	Transistor, NPN
Q2	2N5179	Transistor, NPN

4. CIRCUIT DESCRIPTION

Reference Generator PWB Assembly A2A7A1, shown schematically in figure 7, sheet 1, provides six reference frequency outputs in response to a 1 or 5 MHz input from a TCXO, an optional oven-controlled standard, or an external standard. 160 MHz Generator PWB Assembly A2A7A2, shown in figure 7, sheet 2, uses an 80 MHz crystal oscillator and a frequency doubler to generate the 160 MHz signal required in error-cancelling.

Frequency Standard Assembly A2A7 is normally shipped with 5 MHz TCXO Assembly A2A7A3 (PN 724-0150) installed. This assembly requires no warm-up, and has a frequency stability of ± 1 part in 10^6.

An optional 1 MHz high stability frequency standard (PN 0759-3906) may be ordered to replace the TCXO. This assembly is an oven-controlled crystal oscillator and is part of the RF-560 option. Oven-controlled standard A2A7A3 (PN 0759-3906) has a frequency stability of ± 1 part in 10^8 after a one-hour warm-up period.

Toggle switch S1, located on top of Assembly A2A7, selects either the internal or the external standard. The external standard signal level must be in the 0.5-5 Vrms range.

The signal from A2A7A3 enters PWB A2A7A1 at pins E1 and E2, is limited by Q1, and passes through a 5 MHz bandpass filter. The filter passes the fundamental from the 5 MHz standard or the 5th harmonic from the 1 MHz standard. The filter rejects undesired harmonics of the 1 or 5 MHz input, which would otherwise appear as spurious responses at 1 or 5 MHz increments in the receiver. Table 1 lists the electrical characteristics of the 5 MHz filter.

The signal is amplified by Q2 and used to drive a digital divider chain and limiter Q4. The divider chain develops the following frequencies as shown in the block diagram on on the cover sheet of this section:

- 100 KHz, to High Band PLL Assembly A2A8
- 1 KHz, to Low Band PLL Assembly A2A14
- 250 KHz, to Translator Assembly A2A15
- 50 KHz, to Subcarrier Generator Assembly A2A13
- 25 KHz, to Subcarrier Generator Assembly A2A13 (optional)

The signal applied to Q4 is limited and passed through a 35 MHz bandpass filter. The resulting 35 MHz, -10 dBm reference signal is then applied to the first mixer of Translator Assembly A2A15. The 35 MHz filter rejects undesired harmonics of the 5 MHz standard which would otherwise appear as spurious responses at 5 MHz in the receiver. Table 1 lists the electrical characteristics of the 35 MHz filter.

TABLE 1. CHARACTERISTICS OF 5 MHz AND 35 MHz BANDPASS FILTERS

FILTER	DESCRIPTION
5 MHz	3 dB bandwidth: 160 kHz 70 dB bandwidth: 1.9 MHz Insertion loss: 12.5 dB
35 MHz	3 dB bandwidth: 760 kHz 60 dB bandwidth: 7.25 MHz Insertion loss: 12 dB

With an external standard selected, the signal enters Assembly A2A7 at P1-B. Operation is the same as with the internal standard.

The RF-550 has a 1 or 5 MHz reference output at 0.5 Vrms for use in other equipment in a system, (such as another receiver or an exciter). The signal entering PWB A2A7A1 at pins E1 and E2 is buffered by Q3 and exits at pins E11 and E12 on the PWB, and pin P1-W on the A2A7 Assembly.

PWB A2A7A2 supplies a 160 MHz, -10 dBm reference signal to Translator Assembly A2A15 and to the second mixer in RF/IF Assembly A2A5. These signals are generated at 80 MHz by crystal oscillator A2A7-A2Y1, then amplified and filtered to select the second harmonic. The 160 MHz signals leave the PWB at pins E1, E2, E3 and E4. Using the 160 MHz signal to up-convert in the translator and down-convert in the RF/IF assembly effectively cancels frequency errors and makes the use of a phase-locked oscillator unnecessary.

5. MAINTENANCE

Paragraphs 5.1 and 5.2 give the information required for testing and adjusting Frequency Standard Assembly PW Boards A2A7A1 and A2A7A2. For these tests and adjustments, the RF-550 is placed on a bench and test connections are made as shown in figures 2 and 3. Schematic diagrams of the PWB assemblies are shown in figure 7, sheets 1 and 2.

5.1 REFERENCE GENERATOR PWB ASSEMBLY A2A7A1 TEST AND ADJUSTMENT PROCEDURES

PWB Assembly A2A7A1 is tested and adjusted as described in the following procedure.

a. Test equipment required:

- RF Signal Generator, HP-606 or equivalent.
- Frequency Counter, Eldorado Model 1650
- RF Voltmeter, Boonton 91H or equivalent
- Digital DC Voltmeter
- Test cables, P/O RF-550 Maintenance Repair Kit (MRK) No. 1001-0189
- Oscilloscope

b. Make test connections shown in figure 2.

NOTE

Ensure S1 is in correct position for standard used.

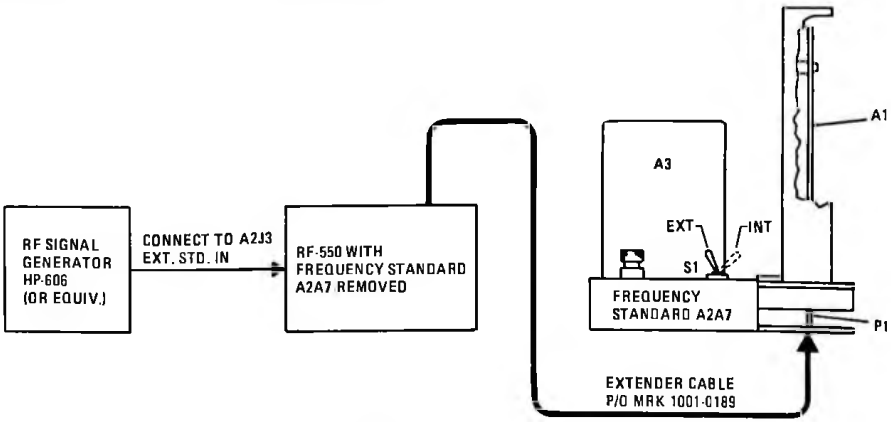

Figure 2. Reference Generator PWB Assembly Test Setup Diagram

c. Connect frequency counter to Internal Standard Out A2J4 and check internal standard operation. Reading should be 1 or 5 MHz at 0.5 Vrms. If internal standard is operating correctly, proceed to step h. If not, either install a new standard and recheck or proceed to step d.

d. Switch S1 to EXT position.

e. Connect RF Signal Generator, with 1 MHz at 1 Vrms or 5 MHz at 1 Vrms capability, to External Standard In, A2J3.

f. Adjust signal source for 1.000,000 MHz or 5.000,000 MHz at 0.5 Vrms, depending on which internal standard is installed. Use frequency counter to ensure correct frequency and level.

g. Measure voltages at Q1, Q2, Q3 and Q4 using digital dc voltmeter. Normal readings and tolerances are as follows:

- Emitters of Q1, Q2, Q3 and Q4: -8.15 ±0.4V
- Bases of Q1, Q2, Q3 and Q4: -7.5 ±0.4V
- Collectors of Q1, Q2 and Q4: OV; Q3: 0 ±0.2V

h. Connect oscilloscope to collector of Q2. Adjust L1, L2, L3 and L4 for maximum 5 MHz output at Q2.

i. Connect oscilloscope to pin E9. Adjust L7, L8, L9 and L10 for a maximum signal at 35 MHz. Measure signal with RF voltmeter; a reading of -20 dBm should be obtained.

j. Measure level at E11 with RF voltmeter; a reading of +7 dBm should be obtained.

k. The following readings should be obtained, at the specified pins, using a frequency counter:

- Pin E9: 35.000,000 MHz
- Pin E3: 250.000 kHz (TTL)
- Pin E5: 100.000 kHz (TTL)
- Pin E18: 50.000 kHz (TTL)
- Pin E16: 25.000 kHz (TTL)
- Pin E7: 1.000 kHz (TTL)

l. After the above tests and adjustments are made, de-energize RF-550, disconnect test setup, and reinstall Frequency Standard A2A7.

5.2 160 MHz GENERATOR PWB A2A7A2 TEST AND ADJUSTMENT PROCEDURES

PWB Assembly A2A7A2 is tested and adjusted as described in the following procedure.

a. Test equipment required:
- Frequency Counter with 50-ohm input and 160 MHz at -10 dBm counting capability.
- Spectrum Analyzer with 1200 MHz RF Section.
- Test cables (P/O MRK 1001-0189).

b. Make test connections shown in figure 3.

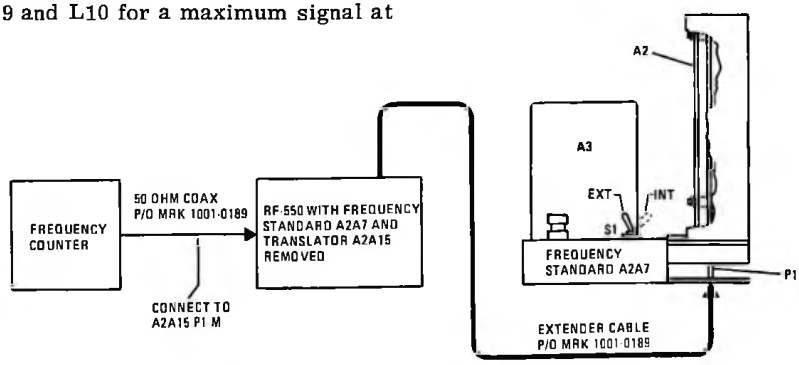

Figure 3. 160 MHz Generator PWB Assembly Test Setup Diagram

c. Connect extender cable (P/O MRK 1001-0189) to A2A7P1.

d. Connect frequency counter to Pin M of assembly A2A15. Use 50-ohm coaxial cable (P/O MRK 1001-0189).

e. Connect spectrum analyzer to pin E1.

f. Remove caps from C1, C4, C12, C14 and C16. Adjust C1 and C4 two turns down from top. Energize RF-550. Signal should appear on analyzer CRT at 160 MHz. If signal does not appear, alternately adjust C1 and C4 until correct signal is obtained.

g. Peak signal displayed on analyzer by tuning C12, C14 and C16. A level of -10 dBm should be obtained.

h. Adjust C4 clockwise until the analyzer signal just disappears (oscillator stops). Rotate C4 counterclockwise until the analyzer signal returns (oscillator starts), and then continue rotating for approximately $\frac{1}{4}$ turn.

i. Adjust C1 for 160 MHz $\pm$ 1 kHz at -10 dBm.

j. De-energize RF-550, disconnect test setup, and reinstall assemblies A2A7 and A2A15.

6. PARTS LIST

Table 2 is a list of frequency standard assembly replaceable parts, including manufacturers' identification numbers. Table 3 is an index of manufacturers' names and addresses listed by identification numbers.

7. COMPONENT LOCATIONS AND SCHEMATIC DIAGRAMS

Component location drawings and the schematic diagrams for Assembly A2A7 are contained in figures 4 through 8.

NOTICE

In some instances, the Integrated Circuit (IC) component types listed herein differ from those of the actual component. These components are physically and electronically interchangeable. Either type can be used for replacement purposes.

TABLE 2. PARTS LIST

REF DESIG	NOTES	NAME AND DESCRIPTION	FIG. NO.
A2A7		Frequency Standard Assembly: MFR 14304, PN 1920-1350-1	
C1		Capacitor, Fixed, Ceramic, 0.47μF, ±20%, 50V: MFR 14304, PN C11-0005-474	
MP1 to MP10		Connector Pin, Coaxial: MFR 81312, PN 100-8001S95	
MP11 to MP14		Connector Pin, Male: MIL Type MS17803-16-20	
P1		Connector, Rectangular, 20 Pin: MFR 81312, PN MRAC20PN7	
R1, R2		Resistor, Fixed, Composition, 51 ohms, ±5%, 1/4W: MIL Type RCR07G510JM	
S1		Switch, Toggle, DPDT: MFR 09353 PN 7201SYPZB	
XA1, XA2		Not Used	
XA3		Connector, Miniature, 7 Pin: MFR 14304, PN X-0042	
A2A7A1		REF. Generator PWB Assembly: MFR 14304, PN 1920-2270	
C1 to C3		Capacitor, Fixed, Ceramic, 0.1 μF, ±20%, 50V: MFR 14304, PN C11-0005-104	

REF DESIG	NOTES	NAME AND DESCRIPTION	FIG. NO.
C4		Capacitor, Fixed, Mica, 470 pF, ±5%, 500V: MIL Type CM06FD471J03	
C5		Capacitor, Fixed, Mica, 20 pF, ±5%, 500V: MIL Type CM05ED200J03	
C6		Capacitor, Fixed, Mica, 10 pF, ±5%, 500V: MIL Type CM05CD100J03	
C7		Capacitor, Fixed, Mica, 15 pF, ±5%, 500V: MIL Type CM05CD150J03	
C8, C9		Capacitor, Fixed, Mica, 470 pF, ±5%, 500V: MIL Type CM06FD471J03	
C10		Capacitor, Fixed, Mica, 510 pF, ±5%, 500V: MIL Type CM06FD511J03	
C11		Capacitor, Fixed, Mica, 3900 pF, ±5%, 500V: MIL Type CM06FD392J03	
C12, C13		Capacitor, Fixed, Ceramic, 0.1 μF, ±20%, 50V: MFR 14304, PN C11-0005-104	
C14		Capacitor, Fixed, Mica, 220 pF, ±5%, 500V: MIL Type CM05FD221J03	
C15		Capacitor, Fixed, Mica, 510 pF, ±5%, 500V: MIL Type CM06FD511J03	

TABLE 2. PARTS LIST (Cont)

REF DESIG	NOTES	NAME AND DESCRIPTION	FIG. NO.
C16		Capacitor, Fixed, Ceramic, 0.1 μF, ±20%, 50V: MFR 14304, PN C11-0005-104	
C17		Capacitor, Fixed, Ceramic, 0.01 μF, ±20%, 50V: MFR 14304, PN C11-0005-103	
C18		Capacitor, Fixed, Ceramic, 0.1 μF, ±20%, 50V: MFR 14304, PN C11-0005-104	
C19		Capacitor, Fixed, Mica, 110 pF, ±5%, 500V: MIL Type CM05FD111J03	
C20		Capacitor, Fixed, Ceramic, 3 pF, ±5%, 500V: MFR 14304, PN C4619	
C21		Capacitor, Fixed, Mica, 120 pF, ±5%, 500V: MIL Type CM05FD121J03	
C22		Capacitor, Fixed, Ceramic, 2.4 pF, ±5%, 500V: MFR 14304, PN C4617	
C23		Capacitor, Fixed, Mica, 120 pF, ±5%, 500V: MIL Type CM05FD121J03	
C24		Capacitor, Fixed, Ceramic, 3 pF, ±5%, 500V: MFR 14304, PN C4619	

REF DESIG	NOTES	NAME AND DESCRIPTION	FIG. NO.
C25		Capacitor, Fixed, Mica, 150 pF, ±5%, 500V: MIL Type CM05FD151J03	
C26		Capacitor, Fixed, Mica, 300 pF, ±5%, 500V: MIL Type CM05FD301J03	
C27 to C30		Capacitor, Fixed, Ceramic, 0.1 μF, ±20%, 50V: MFR 14304, PN C11-0005-104	
C31		Capacitor, Fixed, Tantalum, 10 μF, ±20%, 35V: MFR 12954, PN D10GSC35M	
C32 to C37		Capacitor, Fixed, Ceramic, 0.1 μF, ±20%, 50V: MFR 14304, PN C11-0005-104	
C38		Capacitor, Fixed, Tantalum, 1 μF, ±20%, 20V: MFR 12954, PN D1R0GSA20M	
L1 to L4		Inductor, Variable, 2.2 μH: MFR 14304, PN L11-0004-017	
L5		Inductor, Fixed, RF, 5.6 μH: MIL Type LT4K090	
L6		Inductor, Fixed, RF, 75 μH: MIL Type LT10K009	
L7 to L10		Inductor, Variable, 0.18 μH: MFR 14304, PN L11-0004-004	

TABLE 2. PARTS LIST (Cont)

REF DESIG	NOTES	NAME AND DESCRIPTION	FIG NO.
L11 to L13		Inductor, Fixed, RF, 75 μH: MIL Type LT10K009	
Q1 to Q3		Transistor, NPN: Type 2N2222	
R1		Resistor, Fixed, Composition, 470 ohms, ±10%, 1/4W: MIL Type RCR07G471KM	
R2		Resistor, Fixed, Composition, 6.8K, ±10%, 1/4W: MIL Type RCR07G682KM	
R3		Resistor, Fixed, Composition, 1K, ±10%, 1/4W: MIL Type RCR07G102KM	
R4		Resistor, Fixed, Composition, 1K, ±5%, 1/4W: MIL Type RCR07G102JM	
R5, R6		Resistor, Fixed, Composition, 6.8K, ±10%, 1/4W: MIL Type RCR07G682KM	
R7		Resistor, Fixed, Composition, 390 ohms, ±10%, 1/4W: MIL Type RCR07G391KM	
R8		Resistor, Fixed, Composition, 560 ohms, ±5%, 1/4W: MIL Type RCR07G561JM	

REF DESIG	NOTES	NAME AND DESCRIPTION	FIG. NO.
R9		Resistor, Fixed, Composition, 150 ohms, ±10%, 1/4W: MIL Type RCR07G151KM	
R10, R11		Resistor, Fixed, Composition, 6.8K, ±10%, 1/4W: MIL Type RCR07G682KM	
R12		Resistor, Fixed, Composition, 680 ohms, ±10%, 1/4W: MIL Type RCR07G681KM	
R13		Resistor, Fixed, Composition, 470 ohms, ±5%, 1/4W: MIL Type RCR07G471JM	
R14		Resistor, Fixed, Composition, 1K, ±5%, 1/4W: MIL Type RCR07G102JM	
R15		Resistor, Fixed, Composition, 3.9K, ±5%, 1/4W: MIL Type RCR07G392JM	
R16		Resistor, Fixed, Composition, 10 ohms, ±10%, 1/4W: MIL Type RCR07G100KM	
R17, R18		Resistor, Fixed, Composition, 6.8K, ±10%, 1/4W: MIL Type RCR07G682KM	
R19		Resistor, Fixed, Composition, 10 ohms, ±10%, 1/4W: MIL Type RCR07G100KM	

TABLE 2. PARTS LIST (Cont)

REF DESIG	NOTES	NAME AND DESCRIPTION	FIG. NO.
R20		Resistor, Fixed, Composition, 560 ohms, ±10% 1/4W: MIL Type RCR07G561KM	
R21		Resistor, Fixed, Composition, 6.8K, ±10%, 1/4W: MIL Type RCR07G682KM	
U1		Integrated Circuit: MFR 01295, PN SN7490AN	
U2 to U4		Integrated Circuit: MFR 01295, PN SN74L90N	
U5		Integrated Circuit: MFR 01295, PN SN7400N	
U6		Integrated Circuit: MFR 01295, PN SN74L90N	
A2A7A2		160 MHz Generator PWB Assembly: MFR 14304, PN 1920-2280	
C1		Capacitor, Variable, 1-10 pF: MFR 91293, PN 5201	
C2		Capacitor, Fixed, Mica, 5 pF, ±5%, 500V: MIL Type, CM05CD050D03	
C3		Capacitor, Fixed, Mica, 15 pF, ±5%, 500V: MIL Type CM05CD150J03	
C4		Capacitor, Variable, 1-10 pF: MFR 91293, PN 5201	

REF DESIG	NOTES	NAME AND DESCRIPTION	FIG. NO.
C5 to C7		Capacitor, Fixed, Ceramic, 0.001 μF, ±20%, 50V: MFR 14304, PN C11-0005-102	
C8		Capacitor, Fixed, Mica, 3 pF, ±1 pF, 300V, MFR 72136, PN DM5CC030A	
C9		Capacitor, Fixed, Mica, 10 pF, ±5%, 500V: MIL Type CM05CD100J03	
C10, C11		Capacitor, Fixed, Ceramic, 0.001 μF, ±20%, 50V: MFR 14304, PN C11-0005-102	
C12		Capacitor, Variable, 1-10 pF, MFR 73899, PN VAJ-605	
C13		Capacitor, Fixed, Ceramic, 0.56 pF, ±5%, 500V: MFR 14304, PN C4602	
C14		Capacitor, Variable, 1-10 pF, MFR 73899, PN VAJ-605	
C15		Capacitor, Fixed, Ceramic, 1.2 pF, ±5%, 500V: MFR 14304, PN C4610	
C16		Capacitor, Variable, 1-10 pF, MFR 73899, PN VAJ-605	
C17		Capacitor, Fixed, Mica, 15 pF, ±5%, 500V: MIL Type CM05CD150J03	

TABLE 2. PARTS LIST (Cont)

REF DESIG	NOTES	NAME AND DESCRIPTION	FIG. NO.
C18		Capacitor, Fixed, Mica, 68 pF, ±5%, 500V: MIL Type CM05ED680J03	
C19, C20		Capacitor, Fixed, Ceramic, 0.001 µF, ±20%, 50V: MFR 14304, PN C11-0005-102	
C21		Capacitor, Fixed, Mica, 5 pF, ±5%, 500V: MIL Type CM05CD050D03	
C22		Capacitor, Fixed, Ceramic, 0.001 µF, ±20%, 50V: MFR 14304, PN C11-0005-102	
C23, C24		Capacitor, Fixed, Mica, 12 pF, ±5%, 500V: MIL Type CM05CD120J03	
C25, C26		Capacitor, Fixed, Tantalum, 1 µF, ±20%, 20V: MFR 12954, PN D1R0GSA20M	
C27, C28		Capacitor, Fixed, Ceramic, 0.1 µF, ±20%, 50V: MFR 14304, PN C11-0005-104	
C29		Capacitor, Fixed, 0.001 uF, MFR 12954 PN C11-0005-102	
L1, L2		Inductor, Fixed, RF, 4.7 uH: MIL Type LT4K089	
L3		Inductor, Fixed, RF, 0.27 µH: MIL Type LT4K344 MIN	
L4		Inductor, Fixed, RF, 4.7 uH: MIL Type LT4K089	
L5 to L7		Inductor, Toroidal: MFR 14304, PN 1920-0609	
L8		Inductor, Fixed, RF, 1.5 µH: MIL Type LT4K083	
L9		Inductor, Fixed, RF, 0.15 µH: MIL Type LT4K074	
L10		Inductor, Fixed, RF, 1µH: MIL Type LT4K351MIN	
Q1		Transistor, NPN: Type 1920-2285, MFR 14304	
Q2		Transistor, NPN: Type 2N5179	
Q3		Transistor,NPN: Type 2N3563	
R1		Resistor, Fixed. Composition, 3K, ±10%, 1/4W: MIL Type RCR07G302KM	
R2		Resistor, Fixed, Composition, 2K, ±10%, 1/4W: MIL Type RCR07G202KM	
R3, R4		Resistor, Fixed, Composition, 6.8K, ±10%, 1/4W: MIL Type RCR07G682KM	
R5		Resistor, Fixed, Composition, 1K, ±10%, 1/4W: MIL Type RCR07G102KM	
R6		Resistor, Fixed, Composition, 560 ohms, ±5%, 1/4W: MIL Type RCR07G561JM	
R7, R8		Resistor, Fixed, Composition, 6.8K, ±10%, 1/4W: MIL Type RCR07G682KM	

TABLE 2. PARTS LIST (Cont)

REF DESIG	NOTES	NAME AND DESCRIPTION	FIG. NO.
R9		Resistor, Fixed, Composition, 1K, ±10%, 1/4W: MIL Type RCR07G102KM	
R10		Resistor, Fixed, Composition, 10 ohms, ±10%, 1/4W: MIL Type RCR07G100KM	
R11		Resistor, Fixed, Composition, 100 ohms, ±10%, 1/4W: MIL Type RCR07G101KM	

REF DESIG	NOTES	NAME AND DESCRIPTION	FIG. NO.
R12, R13		Resistor, Fixed, Composition, 12 ohms, ±10%, 1/4W: MIL Type RCR07G120KM	
Y1		Crystal, 80 MHz: MFR 14304, PN 1920-0613	
A2A7A3		Crystal Oscillator: MFR 14304, PN 724-0150	

TABLE 3. INDEX OF MANUFACTURERS' CODES

MFR CODE	MFR NAME AND ADDRESS
01295	Texas Instruments, Inc. Semiconductor Group P.O. Box 5012 13500 N. Central Expressway Dallas, Texas 75222
09353	C and K Components, Inc. 103 Morse Street Watertown, Massachusetts 02172
12954	Dickson Electronics Corporation 8700 East Thomas Road P.O. Box 1390 Scottsdale, Arizona 85352
14304	Harris Corporation RF Communications Division 1680 University Avenue Rochester, New York 14610
72136	Electro Motive Corporation Sub. of International Electronics Corp. South Park and Johns Streets Willimantic, Connecticut 06226
73899	JFD Electronics Corporation 15th at 62nd Street Brooklyn, New York 11219
81312	Winchester Electronics Division Litton Industries, Inc. Main Street and Hillside Avenue Oakville, Connecticut 06779
91293	Johanson Mfg. Company P.O. Box 329 Boonton, New Jersey 07005

THIS CONFIGURATION USED WITH 1920-1350-1 ONLY.

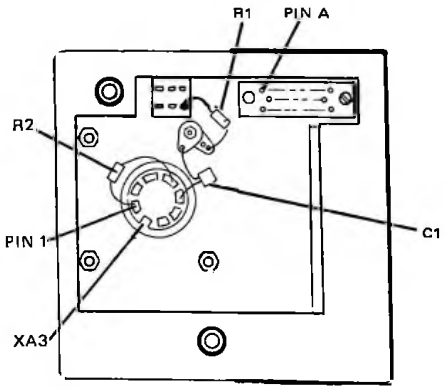

THIS CONFIGURATION USED WITH 1920-1350-2 ONLY

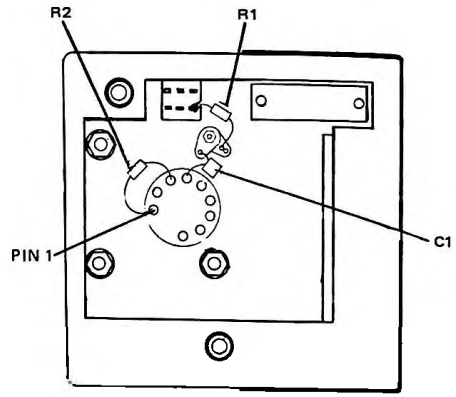

Figure 4. Frequency Standard Options

TABLE A		
PART NO.	NEXT ASSY	USED ON
1920-1350-1	1920-1025	RF-550 (STANDARD)
1920-1350-2	1920-0004	RF-560 OPTION (HIGH STABILITY)

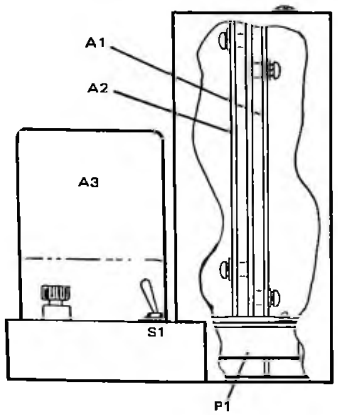

Figure 5. Frequency Standard Assembly, Component Locations

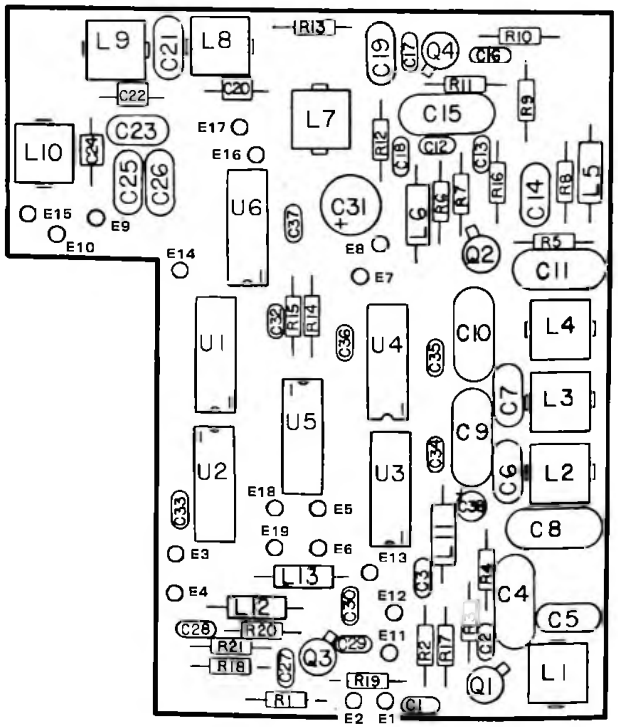

Figure 6. Reference Generator PWB Assembly, Component Locations

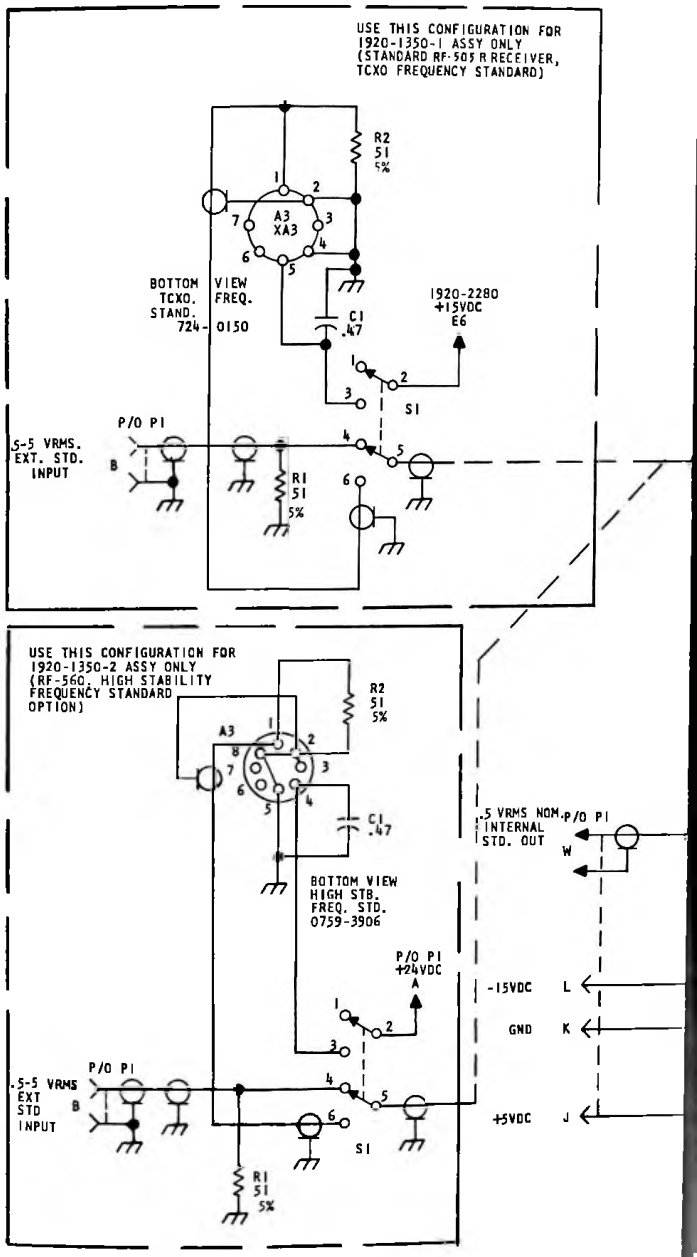

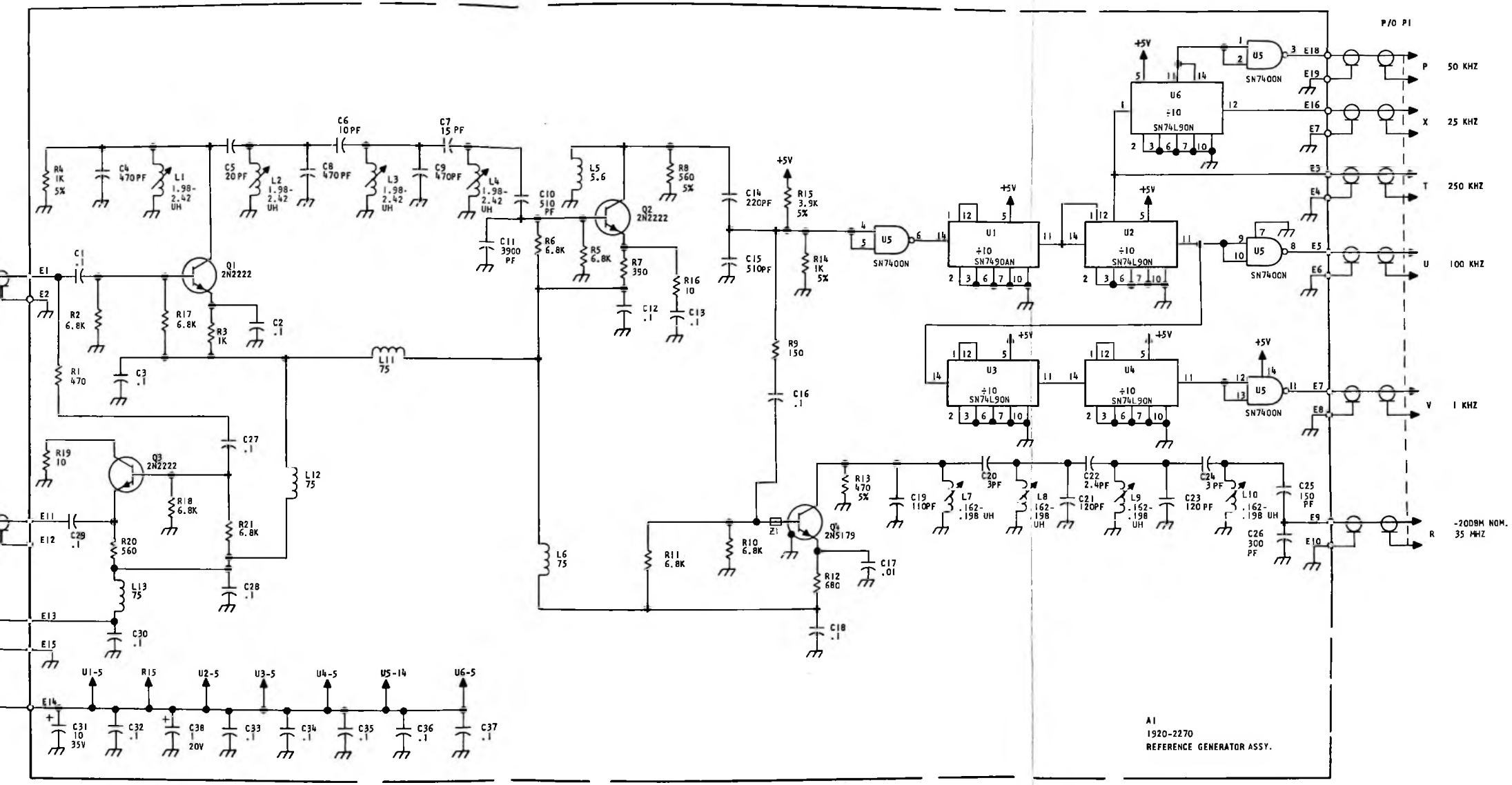

NOTES: See sheet 2 of 2 for general notes.

Figure 7. Frequency Standard Assembly, Schematic Diagram (Sheet 1 of 2)

NOTES: 1. Prefix all reference designators with A2A7.
2. Unless otherwise specified, all capacitance values are in microfarads, all inductances are in microhenries, and all resistances are in ohms, $\frac{1}{4}$W, $\pm$10%.
3. L5, L6, and L7 are 1920-0609 on A2 board.
4. Y1 is a 1920-0613 on A2 board.

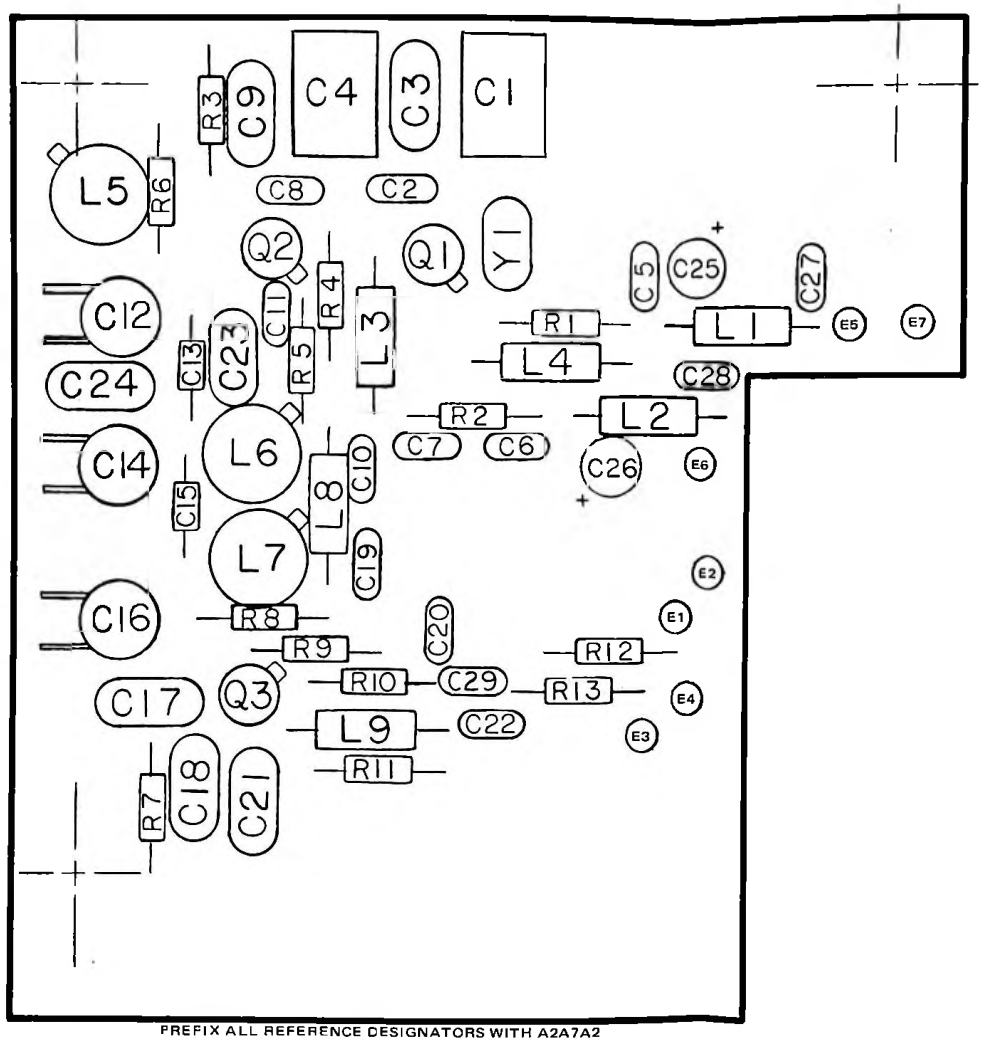

PREFIX ALL REFERENCE DESIGNATORS WITH A2A7A2

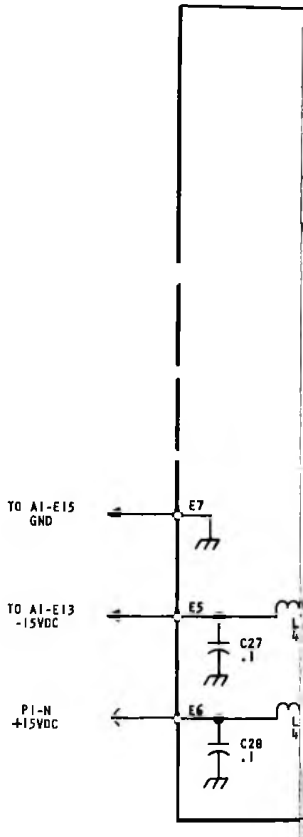

Figure 8. 160 MHz Generator PWB Assembly, Component Locations

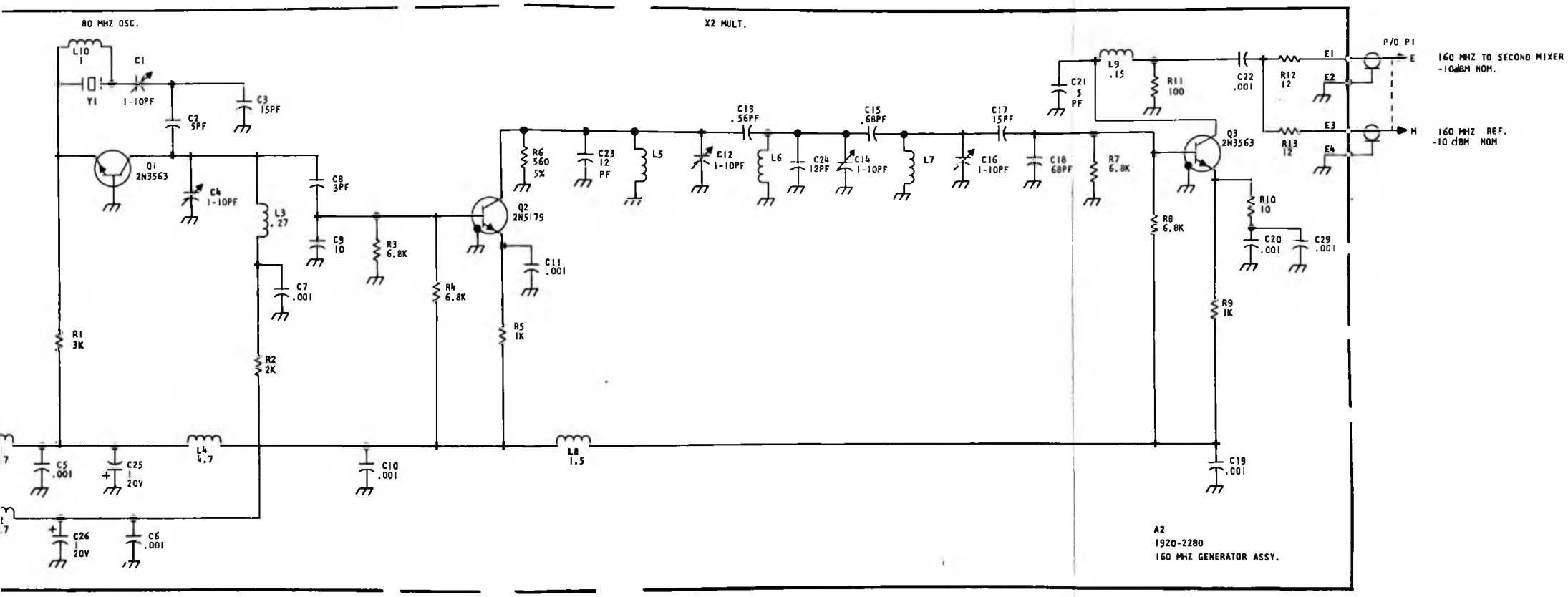

Figure 7. Frequency Standard Assembly, Schematic Diagram (Sheet 2 of 2)

A2A8

UNIT INSTRUCTIONS

HIGH BAND PLL ASSEMBLY

A2A8

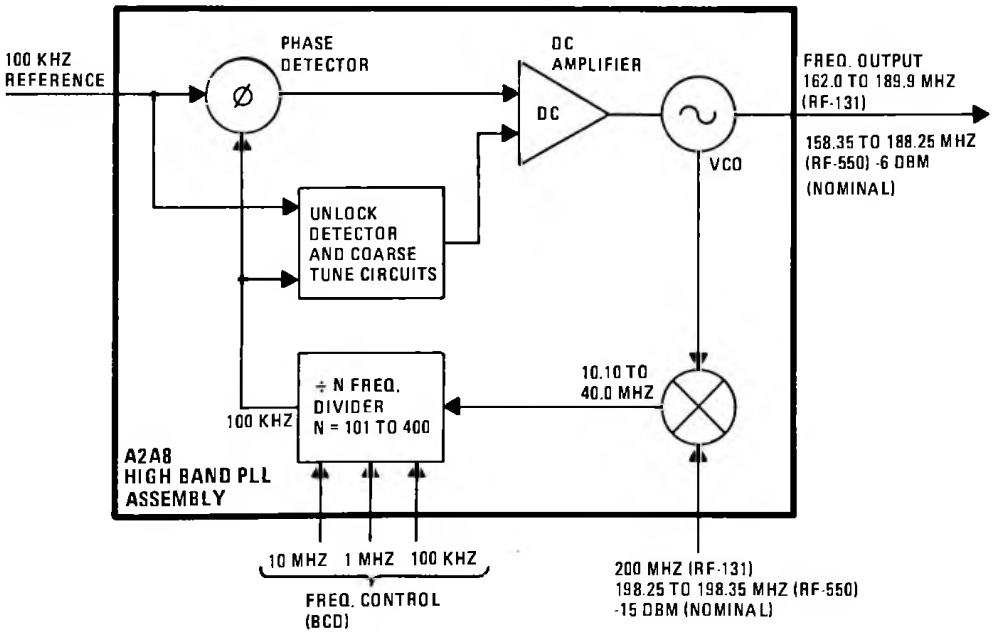

TABLE OF CONTENTS

A2A8

Paragraph		Page
1	General Description	1
2	Technical Characteristics	1
3	Semiconductor Complement	2
4	Circuit Descriptions	2
4.1	Divide-By-N PWB Assembly A2A8A1	2
4.2	RF PWB Assembly A2A8A2	5
5	Maintenance	7
6	Parts List	8
7	Component Location and Schematic Diagrams	8

Table		
1	Decade Divider Circuit Input/Output Data	3
2	Parts List	9
3	Index of Manufacturers' Codes	19

Figure		
1	High Band PLL Assembly, Integrated Relationships	1
2	Phase Detector Waveforms in Locked State	5
3	High Band PLL Assembly Coarse Tune Timing Diagram (Locked)	6
4	High Band PLL Assembly Coarse Tune Timing Diagram (Unlocked)	6
5	Test Setup	8
6	Filter Plate Assembly	21
7	Chassis Connector A2J8 (Top View)	21
8	A2A8 Subassemblies	21
9	÷N PWB Assembly, Component Locations	23
10	÷N PWB Assembly, Schematic Diagram	23
11	VCO Assembly, Component Locations	25
12	RF PWB Assembly, Component Locations	25
13	RF PWB Assembly, Schematic Diagram	25

1. GENERAL DESCRIPTION

The High Band Phase Lock Loop (PLL) is an electronically-tuned frequency synthesizer assembly that can be used interchangeably in both the RF-550 Receiver and the RF-131 Exciter. Jumper changes are required as indicated on figure 9 to effect compatibility with the desired system. When used with the RF-550, the output frequency is in the 158.35 to 188.25 MHz range, when used with the RF-131, the output frequency is in the 162.0 to 189.9 MHz range; In both applications, BCD 10 MHz, 1 MHz, and 100 kHz control elements provide an output adjustable in 100 kHz steps throughout the range. Frequency select control is accomplished using 10 BCD control wires, binary-coded decimal techniques and ÷N frequency divider. The divider provides a 100 kHz output when the VCO is phase-locked to a fixed reference frequency from the Frequency Standard Assembly. Figure 1 shows the High Band PLL Assembly as a functional element of the RF-550 Receiver as it is used to generate the 1st LO mixer frequency to the RF amplifier. Note that the 100 kHz incremental control provided by the High Band PLL complements the 100 Hz incremental control provided by the Low Band PLL so that complete coverage is provided in 100 Hz steps. With the VFO, continuous coverage is provided within the specified range.

2. TECHNICAL CHARACTERISTICS

Weight:
1.2 pounds (543 grams)

Dimensions:
4.125H x 2.125W x 5.875D (inches)
10.5H x 5.4W x 14.9D (cm)

Power Requirements:
5 Vdc at 255 mA avg.
15 Vdc at 80.5 mA avg.
24 Vdc at 144 mA avg.
-6 Vdc at 12 mA avg.

Signal Inputs:
200 MHz at 28 mV rms (RF-131)
198.25 to 198.35 MHz
at 39 mV rms (RF-550)
100 kHz at 3V p-p (TTL levels)
10 Control Wires (ECL levels in the RF-131; TTL levels in the RF-550) using quasi-binary-code

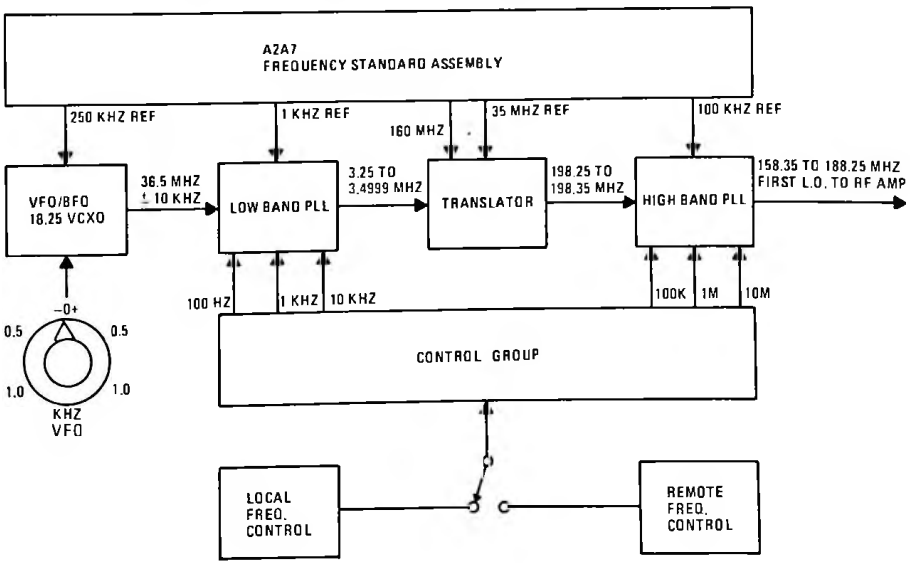

Figure 1. High Band PLL Assembly, Integrated Relationships

Signal Outputs:
162.00 to 189.9 MHz (RF-131)
158.25 to 188.25 MHz (RF-550)
Both in 100 kHz increments (100 kHz increments for any single mixer injection frequency in the RF-550) at 110 mV rms level.

Input Impedance:
198/200 MHz: 50 ohms
100 kHz: approximately 1k ohm

Output Load:
50 ohms

3. SEMICONDUCTOR COMPLEMENT

SYMBOL	TYPE	FUNCTION
A1CR4	1N3064	OR gate
A1CR5	1N3064	OR gate
A1Q1	2N5179	Ramp Control Switch
A1Q2	2N2907	Ramp Generator
A1Q3	2N2222	Ramp Discharge
A1Q4	3N171	Sampling FET
A1Q5	2N5179	Sample Driver
A1Q6	2N4221A	Source Follower
A1U1	SN74S11N	Triple AND Gate
A1U2	SN74S00N	Preload Gate
A1U3	SN74S112N	Dual JK Flip-flop
A1U4	SN74S112N	Dual JK Flip-flop
A1U5	SN74LS196N	Decade Divider
A1U6	SN74S11N	Triple AND Gate
A1U7	SN74S112N	Dual JK Flip-flop
A1U8	SN74S112N	Dual JK Flip-flop
A1U9	SN74S00N	Quad NAND Gate
A1U10	SN74LS112N	Dual JK Flip-flop
A1U11	SN74LS00N	Quad NAND Gate
A1U12	SN74LS112N	Dual JK Flip-flop
A1U13	LM324N	Comparator
A1U14	LM324N	Comparator
A1U15	LM324N	Comparator
A1U16	SN74S00N	Preload Gate
A1U17	SN74LS112N	Dual JK Flip-flop
A2AR1	741	Operational Amplifier
A2AR3	8007C	Operational Amplifier
A2CR2	1N3064	Isolation
A2CR3	1N3064	Reverse Polarity Protection
A2Q1	2N2222	Unlock Switch
A2Q2	3N171	Unlock Switch
A2Q3	SRF552	Amplifier
A2Q4	2N5179	Amplifier
A2Q5	2N5179	Amplifier
A2Q6	2N5179	Amplifier
A2Q9	2N2222	VCO Steering Buffer
A2Q10	2N5179	Buffer Amplifier
A2U1	0759-5150	Mixer
A2U2	UA7818KC	18V Regulator
A2VR3	1N753A	Voltage Regulator
A2A1Q1	2N5397	Oscillator
A2A1CR1	KV2001	Voltage Variable Capacitor
A2A1CR2	KV2001	Voltage Variable Capacitor

4. CIRCUIT DESCRIPTIONS

The High Band PLL Assembly comprises two pwb assemblies in one plug-in module as shown in figure 8. A Voltage Controlled Oscillator (VCO), a loop mixer, a programmable frequency divider (÷N), a frequency discriminator, and a phase detector in a phase-locked loop system synthesize the desired 158.35 to 188.25 MHz 1st LO injection frequency. Operation of a simple phase-locked loop system is described in section A2A14, paragraph 4, of this manual.

4.1 DIVIDE-BY-N PWB ASSEMBLY A2A8A1

PWB Assembly A2A8A1 contains the programmable ÷ N frequency counter, sample-and-hold phase detector, unlock detector, and the VCO steering detector. Figure 10 is a schematic diagram of the assembly. The programmable ÷N counter is made up of two decade counters and one divide-by-four counter. U3 and U4 comprise the 100 kHz decade counter, U5 is the 1 MHz decade counter, and U17 is configured as the 10MHz divide-by-four counter. The first divide-by-ten output at U4B-9 is used to clock the second divide-by-ten counter, U5, which in turn clocks divide-by-four counter U17. The two divide-by-ten counters and the divide-by-four counter provide a total division ratio of 400. Gate U1A is continuously enabled with power on and produces a TTL level output to clock the 100 kHz decade counter in response to the 10-40 MHz input. Assuming no preloading condition, subsequent counter input/output responses are as shown in table 1.

TABLE 1. DECADE DIVIDER CIRCUIT INPUT/OUTPUT DATA

CLOCK INPUT PULSES	COUNTER STATE	Q_A	Q_B	Q_C	Q_D
	0	0	0	0	0
1	1	1	0	0	0
2	2	0	1	0	0
3	3	1	1	0	0
4	4	0	0	1	0
5	5	1	0	1	0
6	6	0	1	1	0
7	7	1	1	1	0
8	8	0	0	0	1
9	9	1	0	0	1
10	0	0	0	0	0
11	1	1	0	0	0
12	2	0	1	0	0
13	3	1	1	0	0

NOTE

Although Table 1 shows the QD output (which corresponds to U4B-9 or U5-8) going high ("1") after an eight count, only one negative-going transition occurs to perform the subsequent clocking function.

Frequency control inputs to each of the counters are used to preload the divider to achieve any desired division ratio from 101 to 400. When a counter is preloaded, fewer pulses are needed to achieve the full state. For example, if a decade counter is preloaded to decimal six and then clocked with input pulses, it counts seven, eight, nine, and then recycles to zero. With decimal six preloading information still at the input, the device is immediately reset to six and continues to perform a divide-by-four function until input instructions are changed. The count ratio in The High Band PLL Assembly varies from 101 to 400 as a function of frequency select switch settings. The exact division ratio can be determined as follows: 400 minus the first three digit switch settings equals the division ratio.

As an example, with 08.6000 MHz selected, the division ratio would be 400 minus 086, or 314.

In order to provide sufficient time for preloading, the counter is inhibited after the 395th count, and the final four counts are assumed by shift register U7, U8. AND gate U1-C detects the "395" state and clears shift register U7, U8 on the next clock pulse, providing the necessary high from U8-6 for NAND gates U2 and U16, and the required low for decade counter U5 to allow preloading to take place. Preloading is ended on the "399" state when U8A toggles and the following clock pulse sets U8B, enabling the counter. The ÷N divider output is a negative transition at U8-9 at the 396th count, and is coupled to the sample-and-hold phase detector.

Since the RF-131 uses ECL (emitter-coupled logic) levels on the frequency control lines, and the RF-550 uses TTL levels, provisions are made to accommodate both sets of levels. Also, both units use quasi-binary-coded control inputs, so that the two and four bit data lines of the 100 kHz and 1 MHz digits are inverted before reaching the assembly. In the RF-131, comparators U13, 14, 15 on the ÷N PW board convert the ECL levels ("0" $\leq$ -1.5 Vdc, "1" $\geq$ -0.5 Vdc) to TTL levels. This is accomplished by placing -1 Vdc comparison bias on the comparators through bias string R28, R23, and R24. The 100 kHz two and four bit re-inversion is handled by placing the reference level on the non-inverting inputs and driving the inverting inputs of comparators U14B and U14C.

In the RF-550, comparators U13, 14, 15, on the ÷N PW Board are biased at approximately +2.0 Vdc by jumpering resistor R28. The comparators once again provide TTL levels to the divider circuits, and the re-inversion of two and four bit data inputs is handled in the same manner as in the RF-131.

The sample-and-hold phase detector consists of ramp generator Q2-R12-C22, sampling

FET Q4, and hold capacitor C23. NAND gates U9C, U9D form a one-shot which provides a very narrow reference pulse at the rate of 100 kHz. This reference pulse sets U10A-5, causing switch Q1 to conduct, and charging C22 through Q2 and R12. The ramp at C22 is terminated by a sample pulse from the ÷ N output at U8-9, clearing flip-flop U10. This pulse also momentarily cuts off switch Q5, which turns on sampling FET Q4. When Q4 is on, the voltage on C23 increases or decreases to attain equilibrium with ramp capacitor C22. Waveforms generated in the phase detector are shown in figure 2.

Source follower FET Q6 provides a high impedance load for C23 so that it will not discharge between sample pulses. The phase error voltage is coupled to the RF PW Board through A1E1. The cycle is completed at the onset of the next reference pulse, which momentarily discharges C22 and again sets flip-flop U10A.

When the loop is locked, the small phase error voltage output tunes the VCO to maintain the correct output frequency. If the loop becomes unlocked, however, a greater voltage swing (in the correct direction to regain lock) is provided to the VCO by the unlock detector circuits, as described in the following paragraphs.

The unlock detector comprises frequency discriminator flip-flops U10A and U10B, AND gate U6C and NAND gates U11A, B, and C. If the divider output becomes "unlocked" from the reference (whether the ÷ N output is higher or lower than the reference), the unlock detector output at A1E4 goes high, enabling coarse steering circuits on the RF PW Board, while flip-flop U12A assumes the correct state to tune the VCO in the direction to regain the locked state.

When the loop is locked, both reference and sample pulses to the phase detector occur at a 100 kHz rate in alternating sequence, as shown in figures 2 and 3. The time difference between the pulses represents the phase error voltage from the phase detector output.

In the locked state, flip-flop U10A always receives a clear pulse after every set pulse. The output from NAND gate U11A is high, since U10-5 is never high when U10-1 is high. For the same reason, NAND gate U11B is also high, thus insuring a low output from NAND gate U11C. AND gate U6C detects any sample and reference pulse occuring at the same time. Since this cannot happen in the locked state (the input pulses alternate with each other) its output will also be low. The net result is that NAND gate U11C and AND gate U6C are always low, keeping the VCO steering switch on the RF PW Board in the off condition.

If, however, the divider output frequency shifts high, sample pulses occur faster than reference pulses, until two (or more) sample pulses occur between two successive reference pulses (figure 4). When this happens, NAND gate U11B "sees" a sample pulse while U10B is in the set (high output) state, allowing negative-going pulses at U11B-11. At the same time, flip-flop U10A is cleared more often than set, and the output from NAND gate U11A remains always high (just as when the loop is locked). Also, AND gate U6C catches any sample and reference pulses occurring at the same time, so that positive pulses may appear at U6C-6. VCO steering flip-flop U12A is clocked by NAND gate U11A and cleared by NAND gate U11B. Because U11A is high, U12A is cleared and never clocked, so its output is low. Positive pulses at A1E4 turn on the VCO steering circuits; a low voltage from A1E9 helps tune the VCO.

The same type of operation occurs when the divider output is low in frequency, causing negative-going pulses at U11A-3 and an ensured high at U11B-11 (just as when the loop is locked). Flip-flop U12A

is clocked and never cleared, thus achieving set state. As a result, positive pulses appear at A2R4 and U12A-5 is high. In effect, NAND gates U11A and U11B are low and high frequency detectors. AND gate U6C is high only when a sample and a reference pulse occur at the same time. When enabled by these gates, flip-flop U12A helps tune the VCO in the correct direction to regain the locked state.

4.2 RF PWB ASSEMBLY A2A8A2

RF PW Board A2A8A2 contains the VCO, loop mixer U1, loop filter and dc amplifier AR3, unlock switching and VCO steering control circuits, and an 18 Vdc regulator (Figure 12).

Referring to VCO Sub-Assembly A2A8A2A1, the VCO is an electrically tuneable oscillator in the range of 158.25 to 189.9 MHz (combined range for RF-550 and RF-131). Using field effect transistor Q1 in grounded gate configuration, the output frequency is determined principally by C9, L2, C10, CR1, and CR2. Positive feedback and output coupling are provided by capacitive voltage divider C6 and C7. Frequency range is adjusted with C9 and C10, while electrical tuning is accomplished with voltage variable capacitors CR1 and CR2.

Output from the VCO is fed to two circuit points. One output becomes the assembly output at P1-U via A2A8A2A1J1. The second output is fed to loop mixer U1 through buffer amplifiers Q10 and Q3.

Loop mixer U1 translates the high VCO output frequency to the 10-40 MHz range by mixing it with (approximately) 200 MHz.

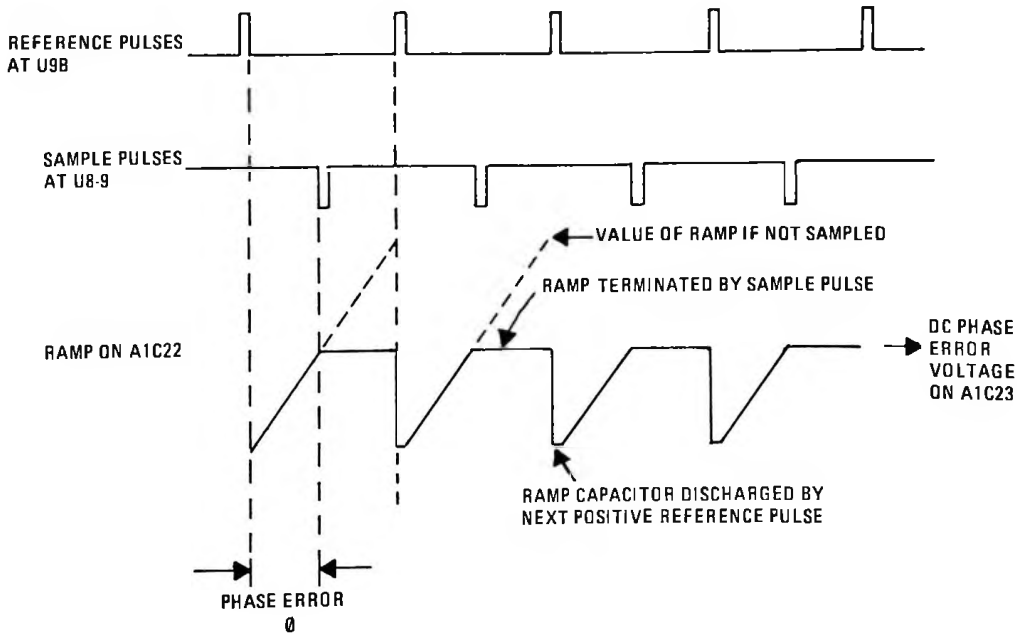

Figure 2. Phase Detector Waveforms in Locked State

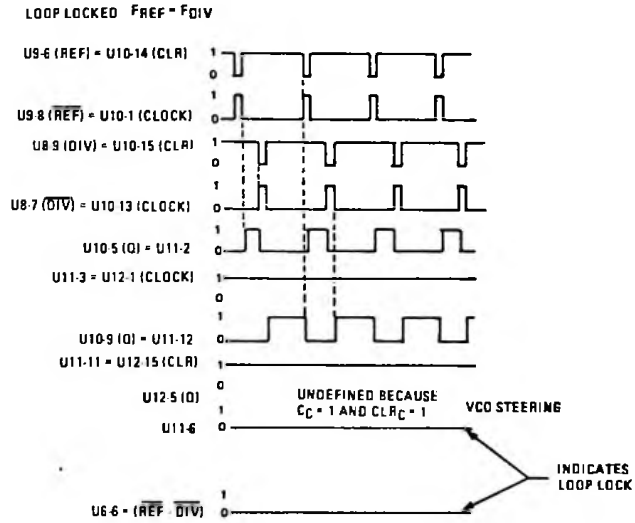

Figure 3. High Band PLL Assembly Coarse Tune Timing Diagram (Locked)

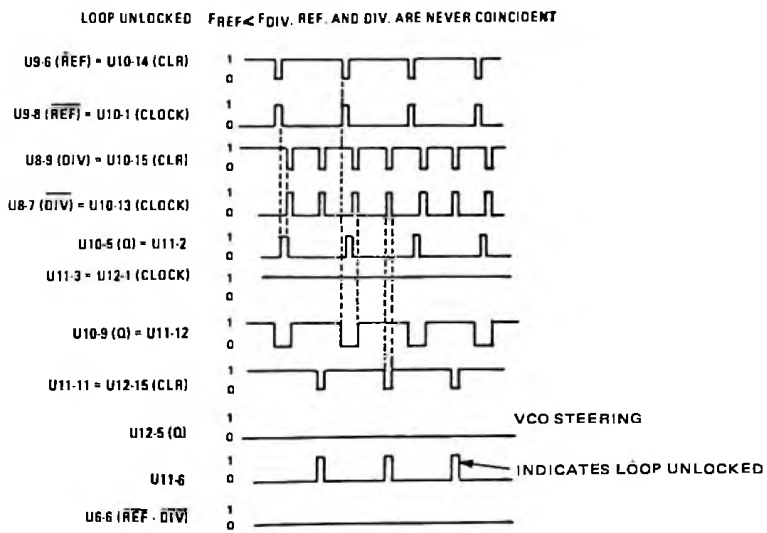

Figure 4. High Band PLL Assembly Coarse Tune Timing Diagram (Unlocked)

The 10-40 MHz signal is then fed through a low pass filter and amplifier Q4-Q5-Q6 to the frequency divider circuits on the ÷N PW Board. The phase error voltage input is fed to high gain dc amplifier AR3. R13, R14, and C5 shape AR3 frequency response to stabilize the loop.

When the loop is unlocked, the unlock detector voltage from the ÷N PW Board is fed through switch Q1, amplified by AR1, and turns on FET switch Q2. This allows the VCO steering voltage to be transferred through Q9 and Q2 to dc amplifier AR3 while the loop is unlocked. If the loop unlocks when the VCO shifts too high in frequency (and so the output of the ÷N is lower than the 100 kHz reference), positive pulses occur at the base of Q1, causing negative pulses at the inverting terminal of AR1, and hence positive pulses at the gate of Q2. A high VCO steering voltage at E2 grounds the R10/R43 voltage divider junction through Q9, discharging C3 through switch Q2 and R2, and produces a negative voltage swing at AR3-6. The negative-going voltage increases the capacitance of varicaps A1CR1 and A1CR2, decreasing the VCO frequency. Should the loop unlock with a lower VCO frequency, the VCO steering voltage goes low, a more positive voltage is transferred to the varicaps and the VCO frequency is increased. When the loop is locked, however, the coarse tune circuits are inhibited by the unlock detector on the ÷N PW Board, which turns off FET Q2. This allows R1 to maintain a preset bias on AR3-3, while the phase error voltage tunes the VCO to maintain the correct frequency output.

The normal operating range of the VCO in the RF-550 is from 158.35 to 188.25 MHz. (The VCO can generate 158.25 MHz with 00.0000 selected at the frequency switches.) A loop mixer injection frequency from 198.25 to 198.35 MHz results in a frequency range at the ÷N input of 10.1 to 40.0 MHz and division ratios of 101 to 400. VCO frequency and division ratio calculations are as follows:

- Division Ratio
  $N = 400 - (P)$
- $fvco = f_1 - (N \times 0.1\ \text{MHz})$

Where:

P = First 3 digits of frequency select switch

N = Division ratio of frequency divider circuits

f_1 = Mixer injection frequency

5. MAINTENANCE

The following procedure is used to align and test the High Band PLL assembly. This adjustment should be made if the VCO does not lock frequency within one-half second of resetting one of the first three digit switches, or if the module jumps in and out of lock. In a properly adjusted assembly, the dc voltage at A2TP2 on the RF pw board (see figure 8) decreases in incremental steps from approximately 13 Vdc at a "299" switch setting to approximately 1.5 Vdc at a "000" switch setting. Ramps at A1TP1 should truncate at the same level as shown in figure 2.

a. Test equipment required (equivalents may be substituted in all cases):

- Oscilloscope, Tektronix Model 453 (with 10X probe)
- Spectrum Analyzer, HP-8554B/8552A
- Alignment Tool, JFD No. 5284
- Extender Cable

b. Set up as per figure 5. All test points and adjustments are accessible from the top of the RF-550 with assembly A2A8 cover removed. The assembly can also be operated on an extender cable if necessary.

c. Using JFD Tool, position A2R1 to mid-range.

d. Using JFD Tool, CAREFULLY adjust A2A1C9 and A2A1C10 to clockwise stop to

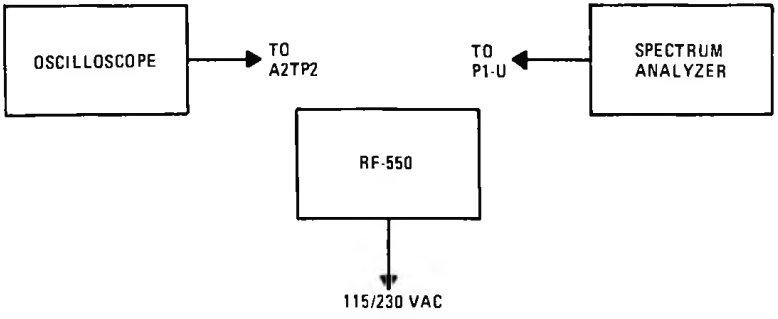

Figure 5. Test Setup

establish a reference; then adjust both capacitors exactly four turns counterclockwise.

e. With power on and in LOCAL control, select 15.0000 MHz at front panel frequency select switches.

f. Set oscilloscope for a horizontal sweep of 10 microseconds per division, and calibrated to read one volt per division, vertical. Connect oscilloscope to A1TP1. Adjust A2R1 until all ramps terminate at the same dc level as shown in figure 2.

g. If loop fails to lock, adjust trimmer capacitors A2A1C9 and/or A2A1C10 one turn in either direction and repeat step f.

h. Adjust A2R1 for a ramp amplitude of 2.5 volts peak-to-peak, and so that all ramps truncate at the same level as shown in figure 2.

i. Connect Oscilloscope to A2TP2. Switch Frequency Select switches slowly, such that lock is mainteined, and adjust trimmer capacitor A2A1C9 until a +1.5 Vdc level at a switch setting of 00.0XXX MHz is selected.

j. Reset the receiver to 15.0000 MHz. Increase frequency slowly such that lock is maintained and adjust A2A1C10 for a voltage of +13.0 Vdc at 29.9 MHz.

k. Repeat steps i and j until A2TP2 has +13.0 Vdc at 29.9999 MHz setting and +1.5 Vdc 00.0XXX MHz setting.

l. Recheck A1TP1 and adjust A2R1 for a ramp amplitude of 2.5 volts peak-to-peak.

m. Connect assembly output (P1-U) to spectrum analyzer. Adjust analyzer for 50 kHz/division and a 3 kHz bandwidth. Adjust A1C24 for 100 kHz sidebands $\leq$70 dB.

6. PARTS LIST

Table 2 lists replaceable parts for the High Band PLL Assembly

7. COMPONENT LOCATION AND SCHEMATIC DIAGRAMS

Figures 8 through 13 contain schematic diagrams and related component location drawings.

NOTICE

In some instances, the Integrated Circuit (IC) component types listed herein differ from those of the actual component. These components are physically and electronically interchangeable. Either type can be used for replacement purposes.

TABLE 2. PARTS LIST

REF DESIG	NOTES	NAME AND DESCRIPTION	FIG NO
A2A8		High Band PLL Assembly, MFR 14304 PN 1976-3800-1, (Used in RF-550 Receiver)	
		High Band PLL Assembly, MFR 14304 PN 1976-3800-2, (Used in RF-131 Exciter)	
FL1		Filter Plate Assembly, MFR 14304 PN 1976-3804	
FL1C1		Not Used	
FL1C2		Capacitor, Feed-Thru, Ceramic, 1750 pF, 250V, MFR 72982, PN 1214-001	
FL1C3		Not Used	
FL1C4 to FL1C6		Capacitor, Feed-Thru, Ceramic, 1750 pF, 250V, MFR 72982, PN 1214-001	
FL1C7		Not Used	
FL1C8		Capacitor, Feed-Thru, Ceramic, 1750 pF, 250V, MFR 72982, PN 1214-001	
FL1C9		Not Used	
FL1C10		Capacitor, Feed-Thru, Ceramic, 1750 pF, 250V, MFR 72982, PN 1214-001	
FL1C11 to FL1C16		Not Used	
FL1C17 to FL1C30		Capacitor, Feed-Thru, Ceramic, 1750 pF, 250V, MFR 72982, PN 1214-001	
FL1C31, FL1C32		Not Used	
FL1C33		Capacitor, Feed-Thru, Ceramic, 1750 pF, 250V, MFR 72982, PN 1214-001	
MP1 to MP3		Connector Pin, Coaxial, Male: MFR 81312, PN 100-8001S95	
MP4 to MP17		Connector Pin, Male: MIL Type MS17803-16-20	
P1		Connector, Rectangular, 20 pin: MFR 81312, PN MRAC20PN	
P2		Connector, Plug, Coaxial: MFR 94375, PN GG-6902-095-901	
A2A8A1		÷N PW Board Assembly, MFR 14304, PN 1976-3810	
C1		Capacitor, Fixed, Ceramic, 0.01 μF, ±20%, 50V: MFR 14304, PN C11-0005-103	
C2, C3		Not Used	

TABLE 2. PARTS LIST (Cont)

REF DESIG	NOTES	NAME AND DESCRIPTION	FIG NO
C4 to C8		Capacitor, Fixed, Ceramic, 0.001 µF, ±20%, 50V: MFR 14304, PN C11-0005-102	
C9 to C13		Not Used	
C14		Capacitor, Fixed, Mica, 470 pF, ±5%, 500V: MIL Type CM05FD471J03	
C15		Not Used	
C16		Capacitor, Fixed, Ceramic, 390 pF ±10%, 50V: MFR 72982, PN CM05FD391503	
C17, C18		Capacitor, Fixed, Ceramic, 0.01 µF, ±20%, 50V: MFR 14304, PN C11-0005-103	
C19		Capacitor, Fixed, Tantalum, 10 µF, ±20%, 35V: MFR 12954, PN D10GSC35M	
C20		Not Used	
C21		Capacitor, Fixed, Ceramic, 0.01 µF, ±20%, 50V: MFR 14304, PN C11-0005-103	
C22		Capacitor, Fixed, Ceramic, 0.01 µF, ±10%, 100V: MFR 72982, PN C11-0008-103	
C23		Capacitor, Fixed, Ceramic, 0.001 µF, ±10%, 100V: MFR 72892, PN 8121-100-X7R-102K	
C24		Capacitor, Variable, 1-10 pF, MFR 91293, PN 5201	
C25, C26		Capacitor, Fixed, Tantalum, 10 µF, ±20%, 35V: MFR 12954, PN D10GSC35M	
CR1 to CR3		Not Used	
CR4, CR5		Diode, Type 1N3064	
Q1		Transistor, NPN, Type 2N5179	
Q2		Transistor, PNP, Type 2N2907	
Q3		Transistor, NPN, Type 2N2222	
Q4		Transistor, MOS-FET, Type 3N171	
Q5		Transistor, NPN, Type 2N5179	
Q6		Transistor, J-FET, Type 1976-4424	
R1		Resistor, Fixed, Composition, 3.9K, ±5%, 1/4W: MIL Type RC07GF392J	

TABLE 2. PARTS LIST (Cont)

REF DESIG	NOTES	NAME AND DESCRIPTION	FIG. NO.
R2, R3		Resistor, Fixed, Composition, 1K, ±5%, 1/4W: MIL Type RC07GF102J	
R4		Resistor, Fixed, Composition, 2.2K, ±5%, 1/4W: MIL Type RC07GF222J	
R5		Resistor, Fixed, Composition, 2.2K, ±5%, 1/4W: MIL Type RCR07GF222J	
R6		Not Used	
R7, R8		Resistor, Fixed, Composition, 390 ohms, ±5%, 1/4W: MIL Type RC07GF391J	
R9		Resistor, Fixed, Composition, 2.2K, ±5%, 1/4W: MIL Type RC07GF222J	
R10		Resistor, Fixed, Composition, 6.8K, ±5%, 1/4W: MIL Type RC07GF682J	
R11		Resistor, Fixed, Composition, 4.7K, ±5%, 1/4W: MIL Type RC07GF472J	

REF DESIG	NOTES	NAME AND DESCRIPTION	FIG. NO.
R12		Resistor, Fixed, Composition, 560K, 560 ohms, ±5%, 1/4W: MIL Type RC07GF561J	
R13		Resistor, Fixed, Composition, 390 ohms, ±5%, 1/4W: MIL Type RC07GF391J	
R14		Resistor, Fixed, Composition, 2.2K, ±5%, 1/4W: MIL Type RC07GF222J	
R15		Resistor, Fixed, Composition, 10K, ±5%, 1/4W: MIL Type RC07GF103J	
R16		Resistor, Fixed, Composition, 2.2K, ±5%, 1/4W: MIL Type RC07GF222J	
R17		Resistor, Fixed, Composition, 560 ohms, ±5%, 1/2W: MIL Type RC20GF561J	
R18		Resistor, Fixed, Composition, 100 ohms, ±5%, 1/4W: MIL Type RC07GF101J	
R19		Resistor, Fixed, Composition, 12K, ±5%, 1/4W: MIL Type RC07GF123J	

TABLE 2. PARTS LIST (Cont)

REF DESIG	NOTES	NAME AND DESCRIPTION	FIG NO
R20		Resistor, Fixed, Composition, 10K, ±5%, 1/4W: MIL Type RC07GF103J	
R21, R22		Resistor, Fixed, Composition, 1K, ±5%, 1/4W: MIL Type RC07GF102J	
R23		Resistor, Fixed, Composition, 1.8K, ±5%, 1/4W: MIL Type RC07GF182J	
R24		Resistor, Fixed, Composition, 4.7K, ±5%, 1/4W: MIL Type RC07GF472J	
R25 to R27		Resistor, Fixed, Composition, 150 ohms, ±5%, 1/4W: MIL Type RC07GF151J	
R28		Resistor, Fixed, Composition, 3.9K, ±5%, 1/4W: MIL Type RC07GF392J	
R29 to R32		Resistor, Fixed, Composition, 10K, ±5%, 1/4W: MIL Type RC07GF103J	
R33 to R38		Resistor, Fixed, Composition, 3.3K ±5%, 1/4W: MIL Type RC07GF332J	
R39		Resistor, Fixed, Composition, 1K, ± 5%, 1/4W: MIL Type RCR07G102KM	

REF DESIG	NOTES	NAME AND DESCRIPTION	FIG NO
TP1		Jack, Test, PW Board: MFR 14304, PN J60-0001-008	
TP2		Jack, Test, PW Board: MFR 14304, PN J60-0001-002	
U1		Integrated Circuit MFR 01295, PN SN74S11N	
U2		Integrated Circuit MFR 01295, PN SN74S00N	
U3, U4		Integrated Circuit MFR 01295, PN SN74S112N	
U5		Integrated Circuit MFR 01295, PN SN74LS196N	
U6		Integrated Circuit MFR 01295, PN SN74S11N	
U7, U8		Integrated Circuit MFR 01295, PN SN74S112N	
U9		Integrated Circuit MFR 01295, PN SN74S00N	
U10		Integrated Circuit MFR 01295, PN SN74LS112N	
U11		Integrated Circuit MFR 01295, PN SN74LS00N	
U12		Integrated Circuit MFR 01295, PN SN74LS112N	

TABLE 2. PARTS LIST (Cont)

REF DESIG	NOTES	NAME AND DESCRIPTION	FIG. NO.
U13 to U15		Integrated Circuit, MFR 12040, PN LM324N	
U16		Integrated Circuit MFR 01295, PN SN74S00N	
U17		Integrated Circuit MFR 01295, PN SN74LS112N	
A2A8A2		RF PW Assembly: MFR 14304 PN 1976-3820	
AR1		Integrated Circuit MFR 14304, Type 741 PN D50-0001-003	
AR2		Not Used	
AR3		Integrated Circuit, PN NE5534AH	
C1		Capacitor, Fixed, Ceramic, 0.01 μF, ±20%, 50V: MFR 14304, PN C11-0005-103	
C2		Not Used	
C3		Capacitor, Fixed, Tantalum, 0.47 uF ±20%, 20V: MFR 05397, PN C11-0005-474	
C4		Capacitor, Fixed, Ceramic, 0.1 μF, ±20%, 50V: MFR 14304, PN C11-0005-104	
C5		Capacitor, Fixed, Mica, 0.1 μF, ±10%, 100V: MFR 72982, PN 8131-100-X7R-104K	

REF DESIG	NOTES	NAME AND DESCRIPTION	FIG. NO.
C7 to C9		Capacitor, Fixed, Tantalum 10 μF, ±20%, 35V: MFR 05397, PN T362C106M035AS	
C10, C11		Capacitor, Fixed, Ceramic, 0.001 μF, ±20%, 50V: MFR 14304 PN C11-0005-102	
C12		Not Used	
C13		Capacitor, Fixed, Ceramic, 0.001 μF, ±20%, 50V: MFR 14304, PN C11-0005-102	
C14		Capacitor, Fixed, Mica, 5 pF, ±1 pF, 300V: MFR 02799, PN DM 5CC050A	
C15 to C17		Capacitor, Fixed, Ceramic, 0.01 μF, ±20%, 50V: MFR 14304, PN C11-0005-103	
C18		Capacitor, Fixed, Mica, 62 pF; ±5%, 500V: MIL Type CM05ED620J03	
C19		Capacitor, Fixed, Mica, 100 pF, ±5%, 500V: MIL Type CM05FD101J03	
C20		Capacitor, Fixed, Mica, 62 pF, ±5%, 500V: MIL Type CM05ED620J03	

TABLE 2. PARTS LIST (Cont)

REF DESIG	NOTES	NAME AND DESCRIPTION	FIG. NO.
C21, C22		Capacitor, Fixed, Ceramic, 0.01 μF; ±20%, 50V: MFR 14304, PN C11-0005-103	
C23, C24		Not Used	
C25		Capacitor, Fixed, Ceramic, 0.01 μF, ±20%, 50V: MFR 14304, PN C11-0005-103	
C26, C27		Capacitor, Fixed, Tantalum, 10 μF, ±20%, 35V: MFR 05397, PN T362C106M035AS	
C28		Capacitor, Fixed, Ceramic, 0.01 μF, ±20%, 50V: MFR 14304, PN C11-0005-103	
C29		Capacitor, Fixed, Mica, 0.1 μF, ±10%, 100V: MFR 72982, PN 8131-100-X7R-104K	
C30 to C32		Capacitor, Fixed, Ceramic, 0.001 μF, ±20%, 50V MFR 14304, PN C11-0005-102	
C33		Capacitor, Fixed, Mica, 10 pF, ±5%, 500V: MIL Type CM05CD100J03	
CR1		Not Used	
CR2, CR3		Diode, Type Type 1N3064	

REF DESIG	NOTES	NAME AND DESCRIPTION	FIG. NO.
L1, L2		Not Used	
L3		Inductor, Fixed, RF, 0.15 μH: MFR 99800, PN 1537-00	
L4, L5		Not Used	
L6		Inductor, Fixed, RF, 15 μH: MFR 99800, PN 1537-40	
L7 to L9		Inductor, Fixed, RF, 0.15 μH: MFR 99800, PN 1537-00	
Q1		Transistor, NPN: Type 2N2222	
Q2		Transistor, MOS-FET: Type 3N171	
Q3		Transistor, NPN: MFR 04713, PN SRF-552	
Q4 to Q6		Transistor, NPN: Type 2N5179	
Q7, Q8		Not Used	
Q9		Transistor, NPN: Type 2N2222	
Q10		Transistor, NPN: Type 2N5179	
R1		Resistor,Variable 10K: MFR 32997, PN 3299X-1-103	
R2		Resistor, Fixed, Composition, 12K, ±5%, 1/4W:: MIL Type RC07GF123J	

TABLE 2. PARTS LIST (Cont)

REF DESIG	NOTES	NAME AND DESCRIPTION	FIG. NO.
R3		Resistor, Fixed, Composition, 27K, ±5%, 1/4W: MIL Type RC07GF273J	
R4		Resistor, Fixed, Composition, 68K, ±5%, 1/4W: MIL Type RC07GF683J	
R5		Resistor, Fixed, Composition, 8.2K, ±5%, 1/4W: MIL Type RC07GF822J	
R6		Resistor, Fixed, Composition, 4.7K, ±5%, 1/4W: MIL Type RC07GF472J	
R7		Resistor, Fixed, Composition, 10K, ±5%, 1/4W: MIL Type RC07GF103J	
R8		Not Used	
R9		Resistor, Fixed, Composition, 39K, ±5%, 1/4W: MIL Type RC07GF393J	
R10		Resistor, Fixed, Composition, 1.2K, ±5%,1/4W: MIL Type RC07GF122J	
R11		Resistor, Fixed, Composition, 12K, ±5%,1/4W: MIL Type RC07GF123J	
R12		Resistor, Fixed, Composition, 100K, ±5%,1/4W: MIL Type RC07GF104J	

REF DESIG	NOTES	NAME AND DESCRIPTION	FIG. NO.
R13		Resistor, Fixed, Composition, 22K, ±5%, 1/4W: MIL Type RC07GF223J	
R14		Resistor, Fixed, Composition, 2.7K, ±5%, 1/4W: MIL Type RC07GF272J	
R15		Resistor, Fixed, Composition, 270 ohms, ±5%, 1/4W: MIL Type RC07GF271J	
R16		Resistor, Fixed, Composition, 10K, ±5%, 1/4W: MIL Type RC07GF103J	
R17		Not Used	
R18		Resistor, Fixed, Composition, 8.2K, ±5%, 1/4W: MIL Type RC07GF822J	
R19		Resistor, Fixed, Composition, 100 ohms, ±5%, 1/4W: MIL Type RC07GF101J	
R20		Resistor, Fixed, Composition, 10K, ±5%, 1/4W: MIL Type RC07GF103J	
R21		Resistor, Fixed, Composition, 6.8K, ±5%, 1/4W: MIL Type RC07GF682J	

TABLE 2. PARTS LIST (Cont)

REF DESIG	NOTES	NAME AND DESCRIPTION	FIG. NO.
R22		Resistor, Fixed, Composition, 680 ohms, ±5%, 1/4W: MIL Type RC07GF681J	
R23		Resistor, Fixed, Composition, 1/8K, ±5%, 1/4W: MIL Type RC07GF182J	
R24		Resistor, Fixed, Composition, 820 ohms, ±5%, 1/4W: MIL Type RC07GF821J	
R25		Resistor, Fixed, Composition, 10 ohms, ±5%, 1/4W: MIL Type RC07GF100J	
R26		Resistor, Fixed, Composition, 47 ohms, ±5%, 1/4W: MIL Type RC07GF470J	
R27, R28		Resistor, Fixed, Composition, 680 ohms, ±5%, 1/4W: MIL Type RC07GF681J	
R29		Resistor, Fixed, Composition, 120 ohms, ±5%, 1/4W: MIL Type RC07GF121J	
R30		Resistor, Fixed, Composition, 1K, ±5%, 1/4W: MIL Type RC07GF102J	
R31		Resistor, Fixed, Composition, 27 ohms, ±5%, 1/4W: MIL Type RC07GF270J	
R32		Resistor, Fixed, Composition, 1.2K, ±5%, 1/4W: MIL Type RC07GF122J	
R33		Resistor, Fixed, Composition, 22 ohms, ±5%, 1/4W· MIL Type RC07GF220J	
R34		Resistor, Fixed, Composition, 10 ohms, ±5%, 1/4W: MIL Type RC07GF100J	
R35		Resistor, Fixed, Composition, 56 ohms, ±5%, 1/4W: MIL Type RC07GF560J	
R36		Resistor, Fixed, Composition, 33 ohms, ±5%, 1/4W: MIL Type RC07GF330J	
R37		Resistor, Fixed, Composition, 1.2K, ±5%, 1/4W: MIL Type RC07GF122J	
R38		Resistor, Fixed, Composition, 680 ohms, ±5%, 1/4W: MIL Type RC07GF681J	
R39		Not Used	

TABLE 2. PARTS LIST (Cont)

REF DESIG	NOTES	NAME AND DESCRIPTION	FIG. NO.
R40		Resistor, Fixed, Composition, 10 ohms, ±5%, 1/4W: MIL Type RC07GF100J	
R41		Not Used	
R42		Resistor, Fixed, Composition, 22 ohms, ±5%, 1/4W: MIL Type RC07GF220J	
R43		Resistor, Fixed, Composition, 2.2K, ±5%, 1/4W, MIL Type RC07GF222J	
T1,T2		Transformer Assembly: MFR 14304, PN 1976-3824	
TP1		Jack, Test, PWB: MFR 74970, PN 105-0851-001	
TP2		Jack, Test, PWB: MFR 74970, PN 105-0852-001	
U1		Minimodule, Mixer: MFR 14304, PN 0759-5150	
U2		Integrated Circuit MFR 07263, PN UA818KC	
VR1,VR2		Not used	
VR3		Diode, Zener,6.2V: MIL Type 1N753A	
A2A8A2A1		VCO Assembly: MFR 14304, PN 1976-3850	

REF DESIG	NOTES	NAME AND DESCRIPTION	FIG. NO.
C1 to C3		Capacitor, Fixed, Feed Thru, 0.001 μF, GMV, 100V MFR 72982, PN 2425-003-W5U0-102AA	
C4, C5		Capacitor, Fixed, Ceramic Chip, 0.001 μF, ±10%, 50V: MFR 14304, PN C11-0006-102	
C6		Capacitor, Fixed, Ceramic Chip, 3.3 pF, ±0.5 pF, MFR 14304, PN C11-0006-3R3	
C7, C8		Capacitor, Fixed, Ceramic Chip, 10 pF, ±10%, 50V: MFR 14304, PN C11-0006-100	
C9, C10		Capacitor, Variable, 1.0-10 pF, MFR 73899, PN VAJ605 (With Nut)	
C11		Not used	
C12		Capacitor, Fixed, Ceramic Chip, 0.01 μF, ±10%, MFR 14304, PN C11-0005-103	
CR1, CR2		Diode, Varicap: MFR 17540 PN DKV6520B	

TABLE 2. PARTS LIST (Cont)

REF DESIG	NOTES	NAME AND DESCRIPTION	FIG. NO.
E1		Terminal, Feed Thru: MFR 14304, PN E35-0001-903	
J1		Receptacle, Coaxial: MFR 98291 PN 51-043-0000	
L1		Inductor, Fixed, 1.0 μH: MFR 99800, PN 1025-20	
L2		Inductor, Fixed, 0.15 μH: MFR 99800, PN 1537-00	
L3		Inductor, Fixed, 1.0 μH: MFR 99800, PN 1025-20	
L4, L5		Inductor, Fixed, 0.82 μH: MFR 99800, PN 1025-18	
Q1		Transistor, J-FET, N Channel: Type 2N5397	

REF DESIG	NOTES	NAME AND DESCRIPTION	FIG. NO.
R1, R2		Resistor, Fixed, Composition, 150 ohms, ±5%, 1/8W: MIL Type RC05GF151J	
R3		Resistor, Fixed, Composition, 51 ohms, ±5%, 1/8W: MIL Type RC05GF510J	
R4, R5		Not Used	
R6		Resistor, Fixed, Composition, 10K, ±5%, 1/8W: MIL Type RC05GF103J	
R7		Resistor, Fixed, Composition, 75 ohms, ±5%, 1/8W: MIL Type RC05GF750J	

TABLE 3. INDEX OF MANUFACTURERS' CODES

MFR CODE	MFR NAME AND ADDRESS
01295	Texas Instruments, Inc., Semiconductor Group P.O. Box 5012 13500 N. Central Expressway Dallas, Texas 75222
02799	Arco Electronics (Elmenco) 9822 Independence Avenue Chatsworth, California 90501
04713	Motorola, Inc. Semiconductor Products Division 5005 East McDowell Road Phoenix, Arizona 85036
07263	Fairchild Semiconductor a Division of Fairchild Camera and Instrument Corp. 464 Ellis Street Mountain View, California 94042
12040	National Semiconductor Corporation P.O. Box 443 Commerce Drive Danbury, Connecticut 06810
12954	Dickson Electronics Corporation 8700 East Thomas Road P.O. Box 1390 Scottsdale, Arizona 85352
14304	Harris Corporation, RF Communications Division 1680 University Avenue Rochester, New York 14610
17540	Alpha Industries Inc. 20 Sylvan Rd. Woburn, Massachusetts 01801
32293	Intersil, Inc. 10900 N. Tantau Avenue Cupertino, California 95014

TABLE 3. INDEX OF MANUFACTURERS' CODES (Cont)

MFR CODE	MFR NAME AND ADDRESS
32997	Bourns, Inc. Trimpot Products Div. 1200 Columbia Avenue Riverside, California 92507
72982	Erie Technological Products, Inc. 644 West 12th Street Erie, Pennsylvania 16512
73899	JFD Electronics Corp. 15th at 62nd Street Brooklyn, New York 11219
74970	EF Johnson Company 299 10th Avenue, S. W. Waseca, Minnesota 56093
81312	Winchester Electronics Div.-Litton Industries, Inc. Main Street and Hillside Avenue Oakville, Connecticut 06779
91293	Johanson Manufacturing Company P.O. Box 329 Boonton, New Jersey 07005
94375	Plessey Connector Div., Inc. 400 Moreland Road Commack, New York 11725
98291	Sealectro Corporation 225 Hoyt Mamaroneck, New York 10544
99800	American Precision Industries, Inc. Delevan Div. 270 Quaker Road East Aurora, New York 14052

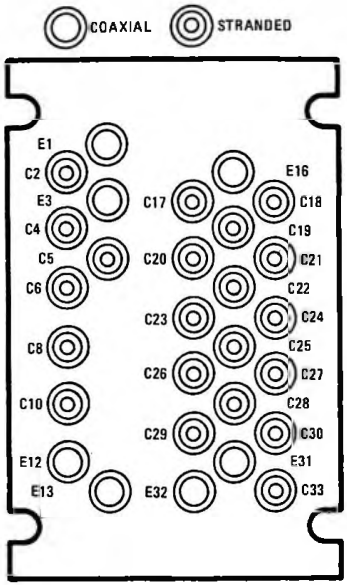

Figure 6. Filter Plate Assembly

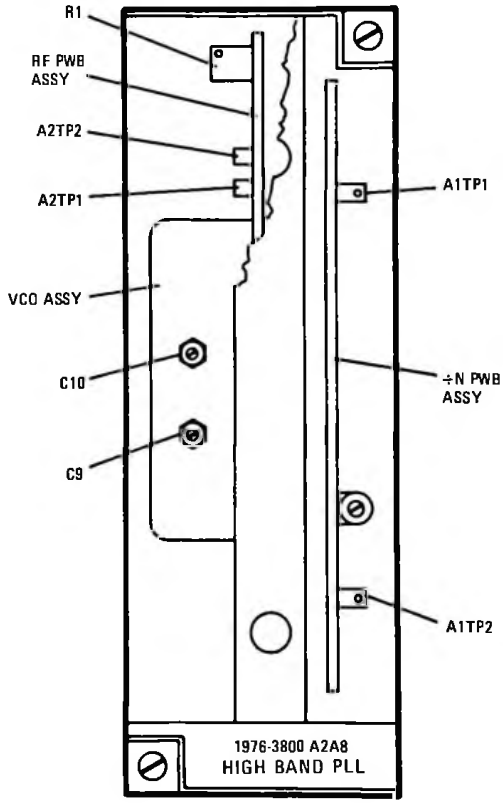

Figure 8. A2A8 Subassemblies

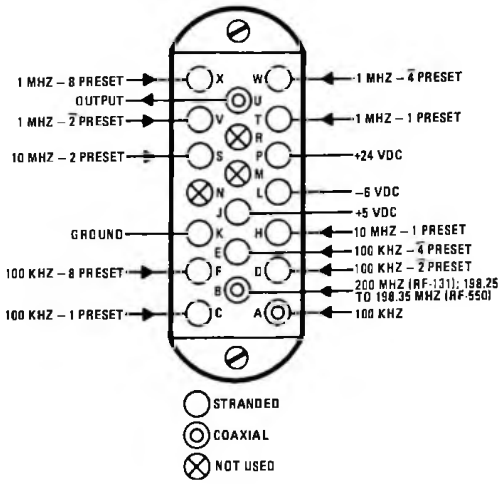

Figure 7. Chassis Connector A2J8 (Top View)

NOTES:

1. Unless otherwise specified:
   A. All Resistors are in ohms, 1/4W, ±5%.
   B. All Capacitors are in microfarads.
   C. All Inductors are in microhenries.
2. Prefix all Reference Designators with A2A8 and any applicable Subassembly Designator.
3. For RF-550, Jumper A1E28 and A1E29 together.
   For RF-131, omit the Jumper
4. A1U3, 4, 7, 8, 10, 12, and 17 have +5 Vdc on pin 16 and gnd on pin 8.
5. A1U1, 2, 5, 6, 9, 11 and 16 have +5 Vdc on pin 14 and gnd on pin 7.
6. A1U13, 14, and 15 have +5 Vdc on pin 4.
7. On A1, U1 and U6 are SN74S11N:
   U3, U4, U7 and U8 are SN74S112N;
   U2, U9, and U16 are SN74S00N;
   U11 is SN74LS00N;
   U10, U12, and U17 are SN74LS112N;
   U13, U14, and U15 are LM324N

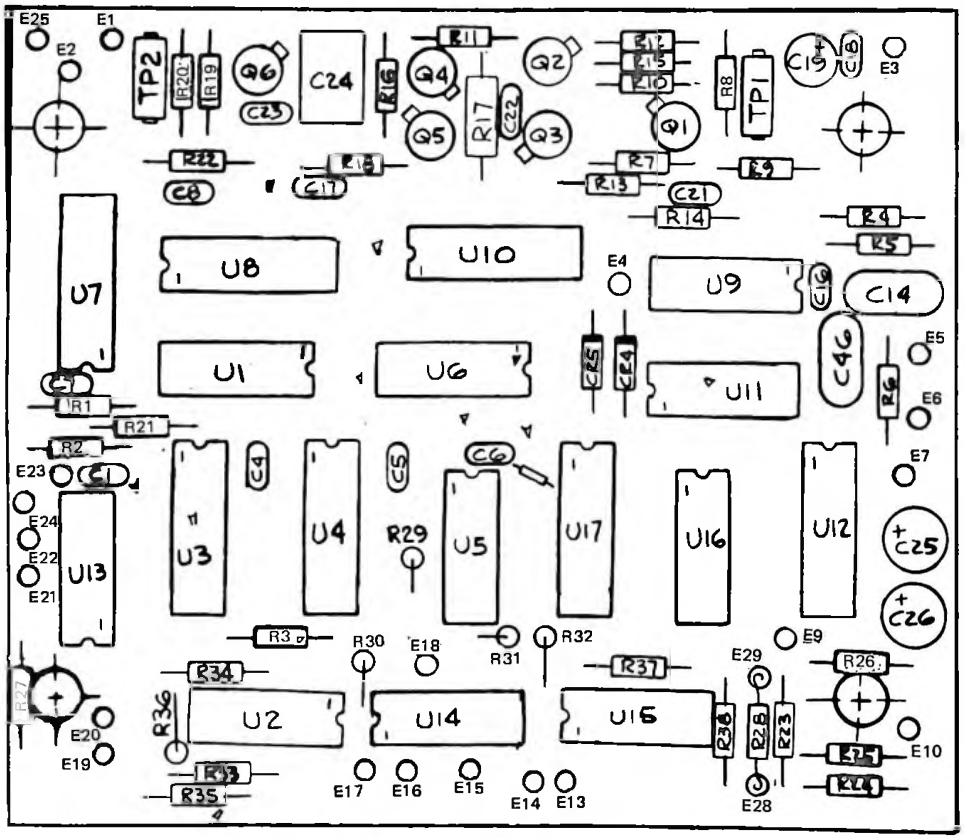

Figure 9. ÷N PWB, Component Locations

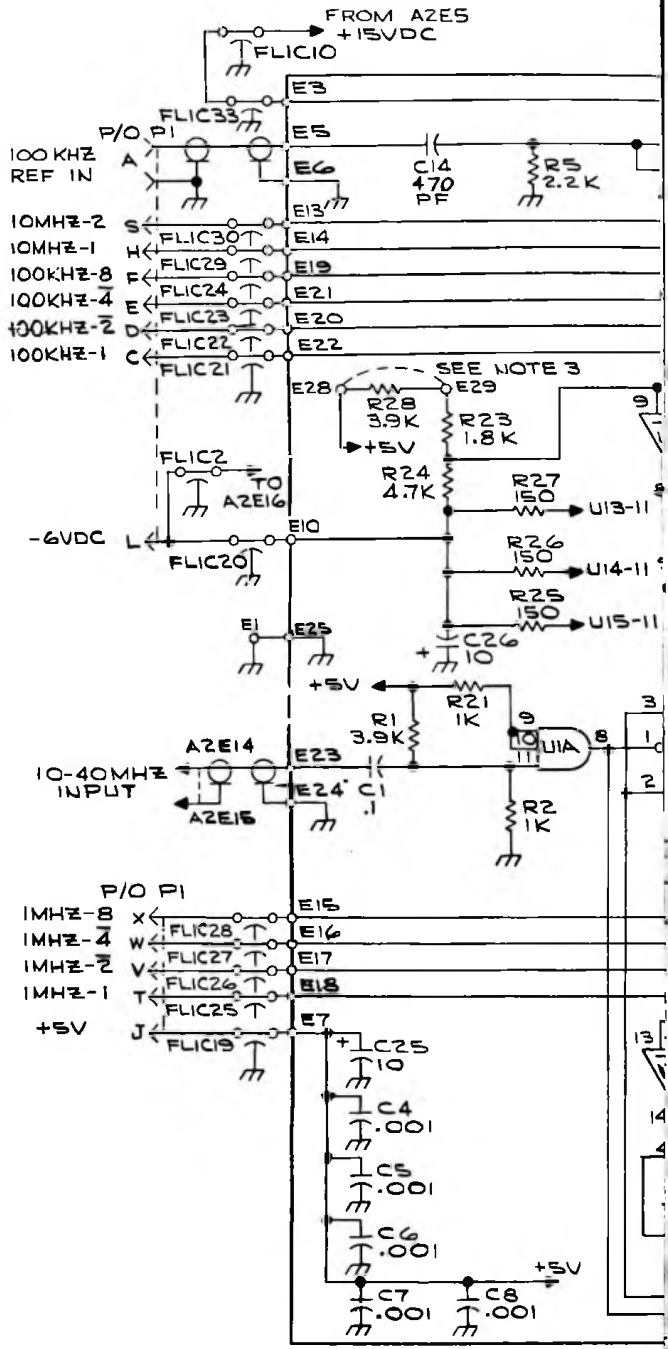

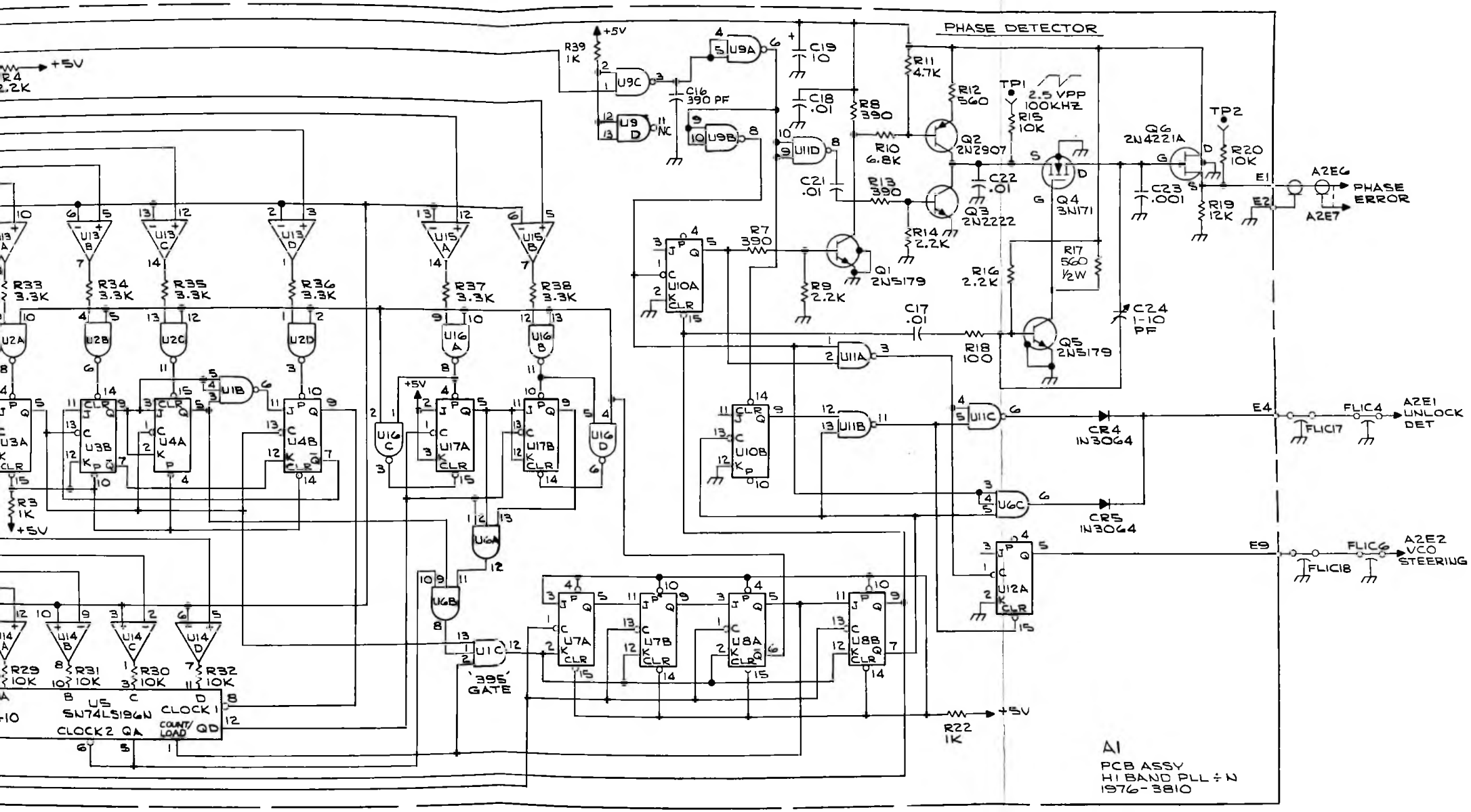

Figure 10. ÷N PWB, Schematic Diagram

NOTES:

1. Unless otherwise specified:
   A. All Resistors are in ohms, 1/4W, ±5%.
   B. All Capacitors are in microfarads.
   C. All Inductors are in microhenries.
2. Prefix all reference designators with A2A8 and any applicable subassembly designator.

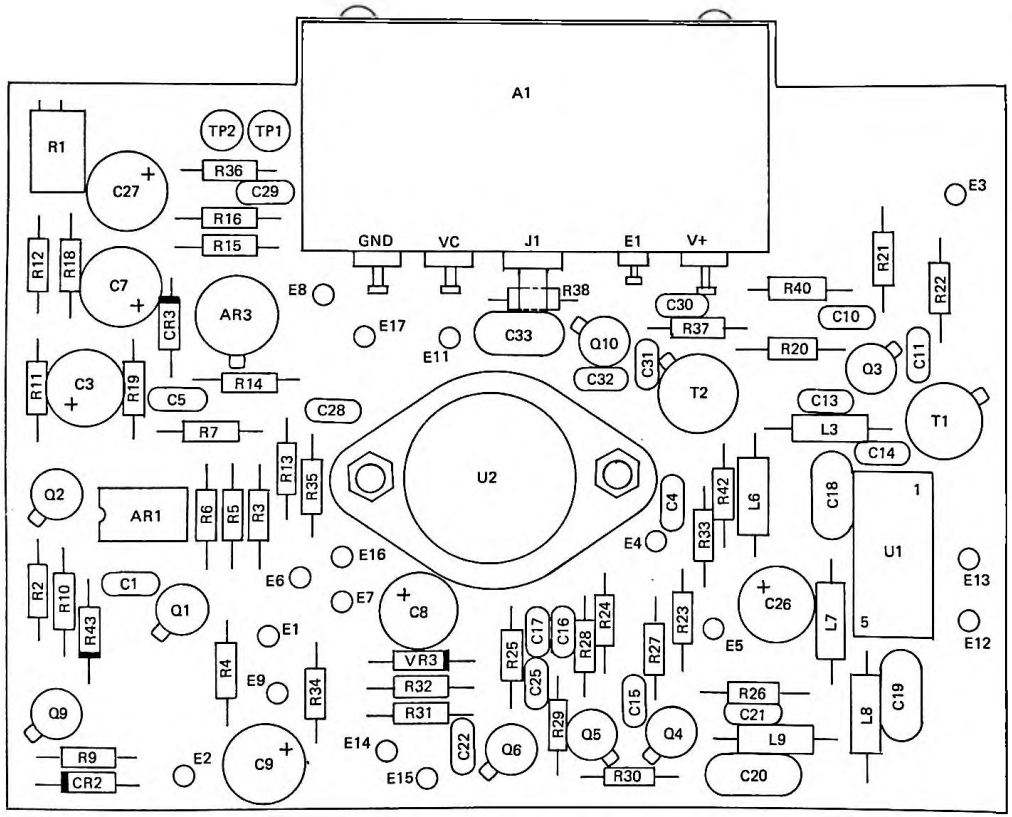

Figure 12. RF PWB, Component Locations

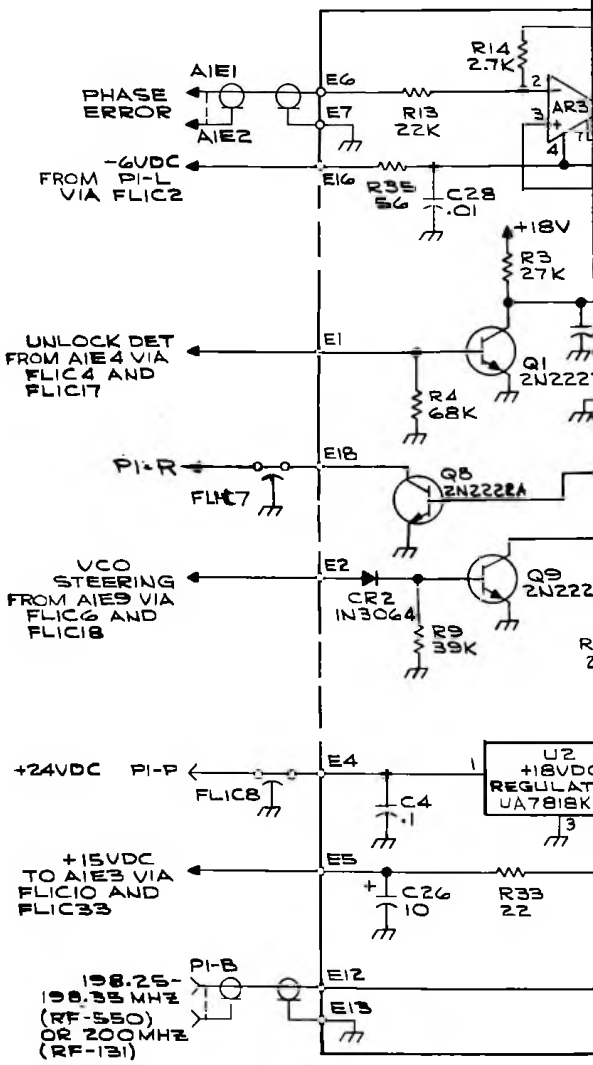

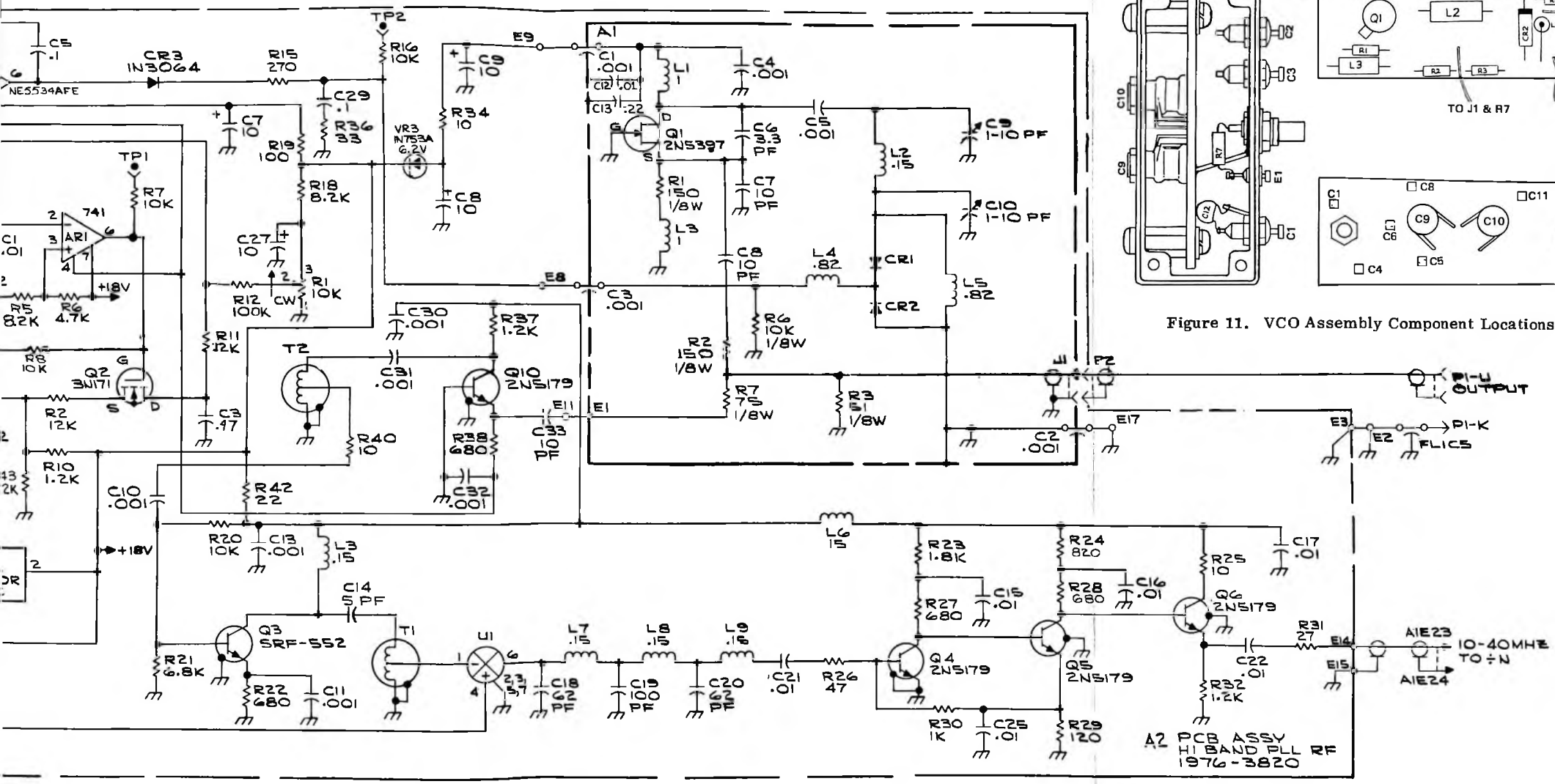

Figure 11. VCO Assembly Component Locations

Figure 13. RF PWB Assembly, Schematic Diagram

A2A9 A2A11
A2A10 A2A12

UNIT INSTRUCTIONS

CONTROL GROUP

A2A9
A2A10
A2A11
A2A12

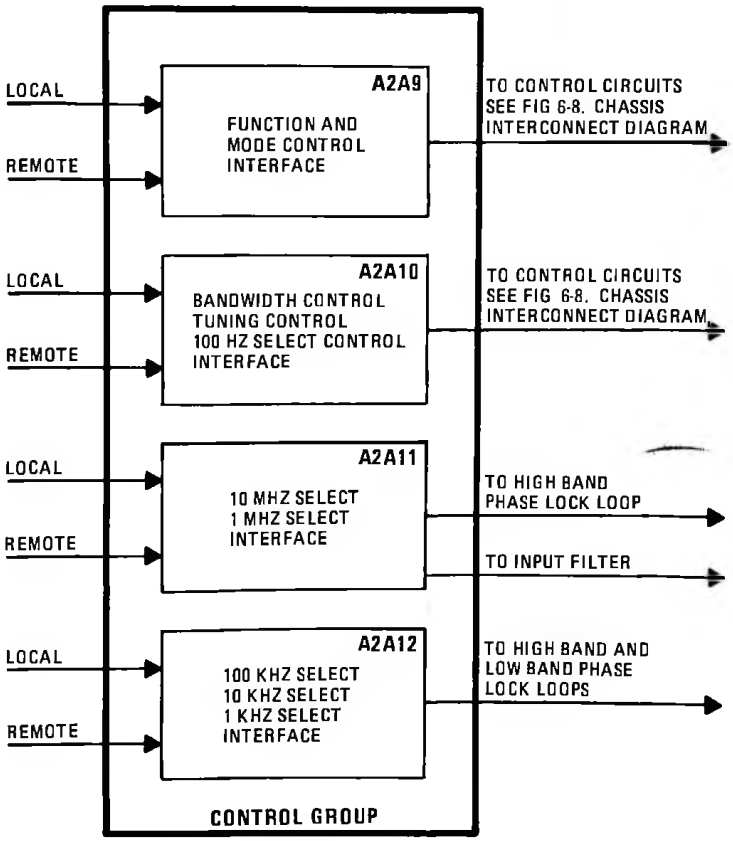

TABLE OF CONTENTS

A2A9, A2A10, A2A11, A2A12

Paragraph		Page
1	General Description	1
2	Technical Characteristics	1
3	Semiconductor Complement	1
4	Circuit Descriptions	1
4.1	Control I PWB, A2A9	2
4.2	Control II PWB, A2A10	3
4.3	Frequency Control 10/1 MHz PWB, A2A11	5
4.4	Frequency Control 100/10/1 kHz PWB, A2A12	5
5	Maintenance	6
6	Parts List	6
7	Component Location and Schematic Diagrams	6

Table		
1	Simplified Filter Control Derivation Data	6
2	Control I PWB Assembly Parts List	7
3	Control II PWB Assembly Parts List	8
4	Frequency Control 10/1 MHz PWB Assembly Parts List	9
5	Frequency Control 100/10/1 kHz PWB Assembly Parts List	11
6	Index of Manufacturers' Codes	13

Figure		
1	Simplified Mode Select Logic and Control Circuit	3
2	Simplified Remote/Local kHz Bandwidth Logic	4
3	Control I PWB, Component Locations	15
4	Control I PWB, Schematic Diagram	15
5	Control II PWB, Component Locations	17
6	Control II PWB, Schematic Diagram	17
7	Frequency Control 10/1 MHz PWB, Component Locations	19
8	Frequency Control 10/1 MHz PWB, Schematic Diagram	19
9	Frequency Control 100/10/1 kHz PWB, Component Locations	21
10	Frequency Control 100/10/1 kHz PWB, Schematic Diagram	21

1. GENERAL DESCRIPTION

The control group consists of four pwb assemblies located at the rear of the RF-550 near the remote control input and output connectors. All four assemblies function to interface the local and remote control inputs and to generate the required control outputs. Assemblies A2A9 and A2A10 are used primarily to interface receiver control functions, and Assemblies A2A11 and A2A12 are used primarily to interface frequency control functions. Toggle switch S5, on the front panel, establishes the control point and conditions logic circuitry in the control group to accept LOCAL, FREQ. REMOTE, or FULL REMOTE control. Logic interfaces are TTL compatible, and analog voltages are used to control VFO and BFO frequencies. Control interface is directly compatible with the RF-130 Transmitter and the RF-551 Preselector.

2. TECHNICAL CHARACTERISTICS

NOTE

The weights, dimensions, and power requirements given below are the same for each of the control group pw boards: A2A9, A2A10, A2A11 and A2A12.

Weight:
3 ounces (85 grams)

Dimensions:
5.38H x 4.54W (inches)
13.66H x 11.53W (cm)

Power Requirements:
+5 Vdc, +15 Vdc, -15 Vdc

Signal Inputs and Outputs:
TTL Logic Input Levels:
Remote control elements use positive true levels
Local control elements use ground true levels

Control Outputs:
+15 Vdc, -15 Vdc, Analog voltages, Positive true BCD

3. SEMICONDUCTOR COMPLEMENT

REF. DESIG.	TYPE	DESCRIPTION
A2A9		
AR1 thru AR8	MC1458CP1	Dual OP AMP
CR1 thru CR33	1N3064	Diode
Q1 thru Q4	U1899RR	Transistor, J-FET, N-Channel
Q5	2N2222	Transistor, NPN
U1 thru U5	SN74L00N	Quad 2-Input NAND
U6 & U7	SN74LS138N	3-to-8 Line Decoder
A2A10		
AR1	LM324N	Quad OP AMP
AR2 thru AR5	MC1458CP1	Dual OP AMP
CR1 thru CR23	1N3064	Diode
Q1	U1899RR	Transistor, J-FET, N-Channel
Q2	P1087RR	Transistor, J-FET, P-Channel
Q3	U1899RR	Transistor, J-FET, N-Channel
Q4 & Q5	P1087RR	Transistor, J-FET, P-Channel
Q6	U1899RR	Transistor, J-FET, N-Channel
U1 thru U4	SN74L00N	Quad 2-Input NAND
U5 and U7	SN74L10N	Triple 3-Input NAND
U6	SN74LS138N	3-to-8 Line Decoder
A2A11		
CR1 thru CR6	1N3064	Diode
U1 thru U6	SN74L00N	Quad 2-Input NAND
U7	SN74LS11N	Triple 3-Input AND
U8	SN74L10N	Triple 3-Input NAND
U9	SN74L00N	Quad 2-Input NAND
U10 thru U12	SN74LS15N	Triple 3-Input AND
U13	SN74L10N	Triple 3-Input NAND
U14	SN74L00N	Quad 2-Input NAND
U15 & U16	LM324N	Quad OP AMP
A2A12		
CR1 thru CR12	1N3064	Diode
U1 thru U8	SN74L00N	Quad 2-Input NAND
U9 thru U11	LM324N	Quad OP AMP

4. CIRCUIT DESCRIPTIONS

The four control group assemblies are plug in circuit boards housed in a separate

card cage at the rear of the RF-550. Remote and local control inputs to these assemblies are selectable to provide either full local control, full remote control, or a combination of remote frequency control with local function control. Assemblies A2A9 and A2A10 contain mostly function control logic, and assemblies A2A11 and A2A12 contain mostly frequency control logic.

4.1 CONTROL I PWB, A2A9

Local and remote receive mode selection and AGC mode selection functions are controlled by Assembly A2A9.

Figure 4 is the Control I PWB Schematic Diagram. Control inputs are shown at the left of the diagram. Note that logic levels on all control lines are held high (+5V) by resistors R1 through R19. Control lines are grounded to select the desired function. Local receive mode control lines for AM, CW, USB, LSB, 2 ISB, or 4 ISB (FM) are controlled by front panel RECEIVE MODE select switch S2A, and LOCAL select switch S5. The mute control line appears at TB3-1 on the rear panel and can be switched to ground, as desired, to effect receiver muting. The FULL REMOTE ENABLE line at P1-4 is grounded by S5 on the front panel in either the LOCAL or FREQ. REMOTE position. Local SLOW, FAST, COHERENT and EXTERNAL AGC lines are controlled by S10A and S5 on the front panel. For remote mode and AGC control, a 3-line code system is used to reduce control line requirements. U6 and U7 are 3-to-8 line decoders that convert the related mode and AGC select codes as shown in the truth tables on the schematic diagram. When A, B, and C input conditions are as shown, the related output is low (ground); all other outputs are high (+5V).

Figure 1 is a simplified diagram of the mode select logic and control circuit. Logic levels indicated (1 = +5V and 0 = gnd) are for Local control with LSB mode selected. NAND gate elements of U2, U3, and U4 control selection of the modes indicated. When a NAND gate output goes high, the associated mode is selected. In the case of LSB mode, the +5V output from U2-11 is applied through CR4 to the non-inverting input of AR7 and appears at the output as a +15V LSB IF ENABLE voltage.

A NAND gate output will go high under any of the following conditions:

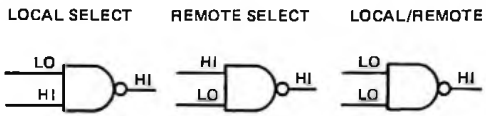

In Local control and with LSB mode selected, the conditions for local LSB mode select are as follows. The logic level at U2-12 is low because R4 is grounded through S2A-3, a section of the front panel RECEIVE MODE select switch, and from S2A-W through the LOCAL-FULL REMOTE-FREQ. REMOTE select switch to ground. Note that all other local mode select logic levels are high. The logic level at U2-13 is established by 3-to-8 line decoder U6. The output at U6-11 is high until the remote input code conditions for LSB select are satisfied at U6A, B, and C, and until the U6-6 enabling input is high.

With E2 strapped to E3 the input levels at U5-1 and 2 are always low, and with U5 functioning as an inverter, the output at U5-3 is always high. With either LOCAL or FREQ. REMOTE selected at S5, the input to U5-12 and -13 is low, producing a high output. With high inputs at U5-9 and -10, the enabling output to U6-6 is low and the decoder is disabled. With the decoder disabled, all U6 outputs are high and control can be effected only from the front panel. The decoder is disabled in both the LOCAL and FREQ. REMOTE positions of S5.

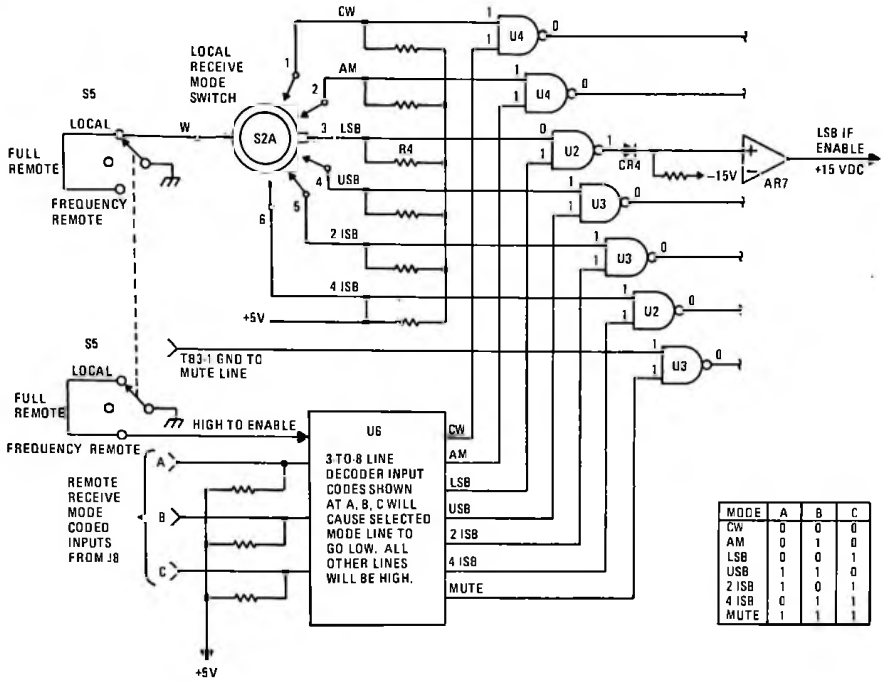

MODE	A	B	C
CW	0	0	0
AM	0	1	0
LSB	0	0	1
USB	1	1	0
2 ISB	1	0	1
4 ISB	0	1	1
MUTE	1	1	1

Figure 1. Simplified Mode Select Logic and Control Circuit

NOTE

The ground strap from E2 to E3 is removed and E1 is strapped to E2 for the RF-574 option. This strapping provides FREQ./XCVR RMT. ENABLE control for the RF-131/RF-790 interface.

With S5 in the FULL REMOTE position, the decoder is enabled and the ground path for local RECEIVE MODE switch S2 is opened. Mutually exclusive local and remote mode and mute functions are thus effected. Local and remote AGC select functions are controlled in exactly the same manner as mode select functions, with U7 performing the decoding function as shown. Note that the U7 decode enable line is the same line used to enable the mode control function in FULL remote and that this same line is used to control FET switches Q3 and Q4 (through AR1) on the Control I PWB. Q3 selects local RF gain control, and Q4 selects remote RF gain control. AGC speeds and modes are selected through AR2, AR4, and AR6 by positive logic output levels from Quad NAND gate U1. FET switches Q1 and Q2 perform the coherent and external AGC switching functions.

4.2 CONTROL II PWB, A2A10

Local and remote tuning mode selection, IF bandwidth control, and 100 Hz frequency control functions are performed by Assembly A2A10. Figure 6 is a schematic diagram of the Control II PWB.

Control inputs are shown at the left of the diagram. Logic levels on control lines are held high (+5V) by resistors R1 through R22.

Grounding a control line produces the low (gnd) logic level. Note that both positive true and ground true input levels are used. Ground true conditions are identified by a superscript bar ($\overline{\text{XCVR BFO}}$).

AM or CW signals from the Control I PWB appear at the Control II PWB input P1-A as +5V true logic levels. A +5V level at the non-inverting input of AR5, pin 5, exceeds the reference input established by R30 and R31 and causes a +15V output at AR5-7, provided AR2-1 and AR5-1 are -15V. The +15V 20 KHZ BW AM or CW output at P1-4 is used as a switching voltage at IF Filter Assembly A2A6A10.

Local 500 Hz or 6 kHz switching inputs from KHZ BANDWIDTH switch S12A appear at P1-D and -B, respectively. The desired control line is selected by S12A and grounded through S5 in the LOCAL or FREQ. REMOTE positions as shown in figure 2. Strapping and logic elements for preset bandwidth operation in XCVR RMT have been omitted in this simplified diagram.

With S5 in the LOCAL or FREQ. REMOTE position, the enabling inputs to U1-2 and -5 are held low. With these U1 inputs held low, the remote 0.5 and 6 kHz inputs can be either 1 or 0 and the U1 outputs are always high in accordance with the NAND truth table. Remote inputs are thus negated. U5, however, reacts to 1 or 0 inputs by producing opposite outputs. With 0.5 KHZ BANDWIDTH selected as shown, the low at U5-2 produces a high output at U5-12. With this +5V present at the non-inverting input of AR2, pin 3, the desired +15V 0.5 KHZ BANDWIDTH AM or CW switching voltage will be present at the output. With the 6 kHz selection path open, U5-11 is high and produces a low output. The resultant negative output from AR5, pin 1, locks out the 6 KHZ BANDWIDTH filter.

Selecting FULL REMOTE at S5 causes U1-2 and -5 to go high and thus enables these NAND gates for remote operation. A positive true remote input produces a low output from the corresponding U1 NAND gate. With S5 in the FULL REMOTE position, all local control lines are high. In this instance, a low logic level at the complementary U5 input produces a high output that generates the desired switching voltage through AR2 or AR5.

Local and remote tuning mode functions are accomplished in exactly the same manner as those described for the Control I PWB in the preceding paragraph. Local tuning mode

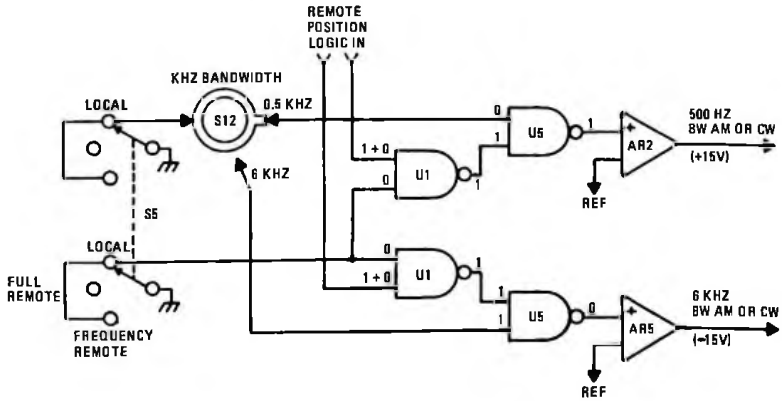

Figure 2. Simplified Remote/Local kHz Bandwidth Logic

inputs at P1-E, -F, -H, and -L are from front panel TUNING MODE switch S6-1, -2, -3, and -4, respectively. The wiper of S6 is also grounded through S5 in the LOCAL or FREQ. REMOTE positions. Three-line remote tuning codes are shown on the Control II schematic. Local or remote VFO control voltages are selected through FET switches Q1, Q2, and Q3. Local or remote BFO control voltages are selected through FET switches Q4, Q5, and Q6.

Local and remote 100 Hz frequency control selection functions are accomplished by AR1, U2, and U3. AR1 is a quad operational amplifier that compares the positive true remote 100 Hz bits with the +2.5V reference established by R25 and R26. The FREQUENCY/TRANSCEIVER REMOTE ENABLE line at P1-X is controlled through S5 and is grounded only in the LOCAL position. With ground or low logic levels at U2-1, U2-13, U3-1 and U3-13, the outputs from these NAND gates are always high, and, as a consequence, remote inputs are disabled. With these high logic levels always present (in LOCAL) at U2-4 and -10, and U3-4 and -10, these NAND gates translate low level true local inputs at P1-T, -R, -W, and -V, to corresponding positive true outputs at P1-S, -P, -Y, and -U. Placing S5 in the FREQ. REMOTE or FULL REMOTE position conditions the logic to accept the positive true remote levels and produce positive true outputs.

4.3 FREQUENCY CONTROL 10/1 MHZ PWB, A2A11

The Frequency Control 10/1 MHz pwb, shown schematically in figure 8, performs two distinct functions. It performs the local or remote 10 MHz and 1 MHz frequency control point select functions, and it controls the initial RF-550 preselection function by generating input filter control logic levels. Recall that these logic levels are translated to filter selection voltages at Input Filter Assembly A2A4.

Local, frequency remote, and full remote selection of 10 MHz and 1 MHz control information is accomplished exactly as previously described for 100 Hz selections in paragraph 4.2. The enable line at P1-K is in parallel with the 100 Hz enable line to the Control II PWB, and will be low with front panel switch S5 in the LOCAL position.

Unlike the 100 Hz logic on the Control II PWB, additional logic elements are used to derive the required filter control logic levels. Note also that triple 3-Input AND gates (U7, U10, U11, and U12) are used in contrast with the NAND logic used extensively to generate other functions.

Table 1 shows filter control band relationships to information available at Assembly A2A11. The test point voltage for the band selected is high (+5V); all other test points voltages are low.

Development of the $<$0.56 MHz filter control output to assembly A2A4 is as follows: The $<$0.56 MHz signal from assembly A2A12 appears at P1-A and at U12-5 as a positive true logic level. AND gate U12 does not generate a +5V $<$0.56 MHz filter control select voltage until all of its inputs are high. U12-3 is high in the presence of a $\overline{\text{100 kHz 8-bit}}$ condition at P1-C because of the inversion performed by U14. U12-4 will go high and complete all three input requirements when a high output from U12-8 indicates a frequency less than 1 MHz condition.

4.4 FREQUENCY CONTROL 100/10/1 KHZ PWB, A2A12

Figure 10 is a schematic diagram of Frequency Control 100/10/1 kHz PWB Assembly A2A12. This assembly contains local and remote 100 kHz, 10 kHz, and 1 kHz frequency select control logic. The local or remote frequency control select functions are identical to those previously described for assemblies A2A10 and A2A11 in paragraphs 4.2 and 4.3.

TABLE 1. SIMPLIFIED FILTER CONTROL DERIVATION DATA

FILTER CONTROL BAND RANGE	SIMPLIFIED BOOLEAN DERIVATION FORMULA	BAND SELECT TEST POINT
24 – 29.9999 MHz	20 MHz • 4 MHz	TP9
16 – 23.9999 MHz	16 MHz • $\overline{\geq 24 \text{ MHz}}$	TP7
12 – 15.9999 MHz	12 MHz • $\overline{\geq 16 \text{ MHz}}$	TP1
8 – 11.9999 MHz	8 MHz • $\overline{\geq 12 \text{ MHz}}$	TP2
6 – 7.9999 MHz	6 MHz • $\overline{\geq 8 \text{ MHz}}$	TP10
4 – 5.9999 MHz	4 MHz • $\overline{\geq 6 \text{ MHz}}$	TP8
3 – 3.9999 MHz	3 MHz • $\overline{\geq 4 \text{ MHz}}$	TP4
2 – 2.9999 MHz	2 MHz • $\overline{\geq 3 \text{ MHz}}$	TP3
0.56 – 1.9999 MHz	$\overline{<0.56}$ • $\overline{\geq 2 \text{ MHz}}$	TP6
<0.56 MHz	<0.56 • < 800 kHz	TP5

5. MAINTENANCE

All four assemblies in the control group can be tested using a straightforward operational procedure. By removing an assembly and operating it on an extender card, test points and input and output connections are made readily accessable.

CAUTION

Always remove power before removing and/or reinstalling assemblies.

All control inputs are either +5 Vdc or ground, as shown on the related schematic. Switch conditions can be set locally or at the remote control unit to produce required levels for test. Verify inputs and outputs with a VOM by measuring from the appropriate pin to ground. Positive or ground level true conditions are shown on the related schematics. Measure test point voltages for each filter control selection to verify logic operation (refer to table 1).

6. PARTS LIST

Tables 2 through 5 are parts lists for assemblies A2A9, A2A10, A2A11, and A2A12, respectively. Table 6 is an index of related manufacturers' codes.

7. COMPONENT LOCATION AND SCHEMATIC DIAGRAMS

Figures 3 through 10 are component location and schematic diagrams for all assemblies in the control group.

NOTICE

In some instances, the Integrated Circuit (IC) component types listed herein differ from those of the actual component. These components are physically and electronically interchangeable. Either type can be used for replacement purposes.

TABLE 2. CONTROL I PWB ASSEMBLY PARTS LIST

REF DESIG	NOTES	NAME AND DESCRIPTION	FIG. NO
A2A9		Control I PWB Assembly: MFR 14304, PN 1920-2210	
AR1 to AR8		Integrated Circuit: MFR 04713, PN MC1458CP1	
C1 to C9		Capacitor, Fixed, Ceramic, 0.1 μF, ±20%, 50V: MFR 14304, PN C11-0005-104	
CR1 to CR34		Diode: Type 1N3064	
Q1 to Q4		Transistor, J-FET, N-Channel: MFR 17856, PN U1899RR	
Q5		Transistor, NPN: MIL Type 2N2222	
R1 to R20		Resistor, Fixed, Composition, 10K, ±10%, 1/4W: MIL Type RCR07G103KM	
R21 to R25		Resistor, Fixed, Composition, 1M, ±10%, 1/4W: MIL Type RCR07G105KM	
R26 to R29		Resistor, Fixed, Composition, 100K, ±10%, 1/4W: MIL Type RCR07G104KM	
R30		Resistor, Fixed, Composition, 12K, ±10%, 1/4W: MIL Type RCR07G123KM	
R31		Resistor, Fixed, Composition, 1.5K, ±10%, 1/4W: MIL Type RCR07G152KM	
R32 to R36		Resistor, Fixed, Composition, 47 ohms, ±10%, 1/4W: MIL Type RCR07G470KM	
R37		Resistor, Fixed, Composition, 1M, ±10%, 1/4W: MIL Type RCR07G105KM	
R38		Resistor, Fixed, Film, 100K, ±2%, 1/4W: MIL Type RL07S104G	
R39 to R41		Resistor, Fixed, Composition, 1M, ±10%, 1/4W: MIL Type RCR07G105KM	
R42		Resistor, Fixed, Composition, 10K, ±10%, 1/4W: MIL Type RCR07G103KM	
U1 to U5		Integrated Circuit: MFR 01295, PN SN74L00N	
U6, U7		Integrated Circuit: MFR 01295, PN SN74LS138N	

TABLE 3. CONTROL II PWB ASSEMBLY PARTS LIST

REF DESIG	NOTES	NAME AND DESCRIPTION	FIG. NO
A2A10		Control II PWB Assembly: MFR 14304 PN 1920-2220	
AR1		Integrated Circuit: MFR 12040, PN LM324	
AR2 to AR5		Integrated Circuit: MFR 04713, PN MC1458CP1	
C1 to C8		Capacitor, Fixed, Ceramic, 0.1 µF, ±20%, 50V: MFR 14304, PN C11-0005-104	
CR1 to CR23		Diode: Type 1N3064	
Q1		Transistor, J-FET, N-Channel: MFR 17856, PN U1899RR	
Q2		Transistor, J-FET, P-Channel: MFR 17856, PN P1087RR	
Q3		Transistor, J-FET, N-Channel: MFR 17856, PN U1899RR	
Q4, Q5		Transistor, J-FET, P-Channel: MFR 17856, PN P1087RR	
Q6		Transistor, J-FET, N-Channel: MFR 17856, PN U1899RR	
R1, R2		Resistor, Fixed, Composition, 10K, ±10%, 1/4W: MIL Type RCR07G103KM	

REF DESIG	NOTES	NAME AND DESCRIPTION	FIG. NO.
R3		Resistor, Fixed, Composition, 1M, ±10%, 1/4W: MIL Type RCR07G105KM	
R4 to R24		Resistor, Fixed, Composition, 10K, ±10%, 1/4W: MIL Type RCR07G103KM	
R25, R26		Resistor, Fixed, Composition, 2.7K, ±10%, 1/4W: MIL Type RCR07G272KM	
R27		Resistor, Fixed, Composition, 100K, ±10%, 1/4W: MIL Type RCR07G104KM	
R28, R29		Resistor, Fixed, Composition, 1M, ±10%, 1/4W: MIL Type RCR07G105KM	
R30		Resistor, Fixed, Composition, 12K, ±10%, 1/4W: MIL Type RCR07G123KM	
R31		Resistor, Fixed, Composition, 1.5K, ±10%, 1/4W: MIL Type RCR07G152KM	
R32 to R37		Resistor, Fixed, Composition, 1M, ±10%, 1/4W: MIL Type RCR07G105KM	
U1 to U4		Integrated Circuit: MFR 01295, PN SN74L00N	

TABLE 3. CONTROL II PWB ASSEMBLY PARTS LIST (Cont)

REF DESIG	NOTES	NAME AND DESCRIPTION	FIG. NO.
U5, U7		Integrated Circuit: MFR 01295, PN SN74L10N	
U6		Integrated Circuit: MFR 01295, PN SN74LS138N	

TABLE 4. FREQUENCY CONTROL 10/1 MHZ PWB ASSEMBLY PARTS LIST

REF DESIG	NOTES	NAME AND DESCRIPTION	FIG. NO.
A2A11		10/1 MHz Frequency Control PWB Assembly: MFR 14304, PN 1920-2240	
C1 to C3		Capacitor, Fixed, Ceramic, 0.1 μF, ±20%, 50V: MFR 14304, PN C11-0005-104	
CR1 to CR6		Diode: Type 1N3064	
R1		Resistor, Fixed, Composition, 10K, ±10%, 1/4W: MIL Type RCR07G103KM	
R2		Resistor, Fixed, Composition, 4.7K, ±10%, 1/4W: MIL Type RCR07G472KM	
R3		Resistor, Fixed, Composition, 10K, ±10%, 1/4W: MIL Type RCR07G103KM	
R4		Resistor, Fixed, Composition, 4.7K, ±10%, 1/4W: MIL Type RCR07G472KM	
R5		Resistor, Fixed, Composition, 10K, ±10%, 1/4W: MIL Type RCR07G103KM	
R6		Resistor, Fixed, Composition, 4.7K, ±10%, 1/4W: MIL Type RCR07G472KM	
R7		Resistor, Fixed, Composition, 10K, ±10%, 1/4W: MIL Type RCR07G103KM	
R8		Resistor, Fixed, Composition, 4.7K, ±10%, 1/4W: MIL Type RCR07G472KM	
R9		Resistor, Fixed, Composition, 10K, ±10%, 1/4W: MIL Type RCR07G103KM	
R10		Resistor, Fixed, Composition, 4.7K, ±10%, 1/4W: MIL Type RCR07G472KM	
R11		Resistor, Fixed, Composition, 10K, ±10%, 1/4W: MIL Type RCR07G103KM	
R12		Resistor, Fixed, Composition, 4.7K, ±10%, 1/4W: MIL Type RCR07G472KM	
R13		Resistor, Fixed, Composition, 1K, ±10%, 1/4W: MIL Type RCR07G102KM	
R14, R15		Resistor, Fixed, Composition, 2.7K, ±5%, 1/4W: MIL Type RCR07G272JM	
R16 to R24		Resistor, Fixed, Composition, 10K, ±10%, 1/4W: MIL Type RCR07G103KM	

TABLE 4. FREQUENCY CONTROL 10/1 PWB ASSEMBLY PARTS LIST (Cont)

REF DESIG	NOTES	NAME AND DESCRIPTION	FIG. NO.
TP1		Jack, Test Point, PC Board, Brown: MFR 14304, PN J60-0001-008	
TP2		Jack, Test Point, PC Board, Red: MRF 14304, PN J60-0001-002	
TP3		Jack, Test Point, PC Board, Orange: MFR 14304, PN J60-0001-006	
TP4		Jack, Test Point, PC Board, Yellow: MFR 14304, PN J60-0001-007	
TP5		Jack, Test Point, PC Board, Green: MFR 14304, PN J60-0001-004	
TP6		Jack, Test Point, PC Board, Blue: MFR 14304, PN J60-0001-010	
TP7		Jack, Test Point, PC Board, Violet: MFR 14304, PN J60-0001-012	
TP8		Jack, Test Point, PC Board, Gray: MFR 14304, PN J60-0001-013	
TP9		Jack, Test Point, PC Board, White: MFR 14304, PN J60-0001-001	

REF DESIG	NOTES	NAME AND DESCRIPTION	FIG. NO.
TP10		Jack, Test Point, PC Board, Black: MFR 14304, PN J60-0001-003	
U1 to U6		Integrated Circuit: MFR 01295, PN SN74L00N	
U7		Integrated Circuit: MFR 01295, PN SN74LS11N	
U8		Integrated Circuit: MFR 01295, PN SN74L10N	
U9		Integrated Circuit: MFR 01295, PN SN74L00N	
U10 to U12		Integrated Circuit: MFR 01295, PN SN74LS15N	
U13		Integrated Circuit MFR 01295, PN SN74L10N	
U14		Integrated Circuit MFR 02195, PN SN74L00N	
U15, U16		Integrated Circuit: MFR 12040, PN LM324N	

TABLE 5. FREQUENCY CONTROL 100/10/1 KHZ PWB ASSEMBLY PARTS LIST

REF DESIG	NOTES	NAME AND DESCRIPTION	FIG. NO.
A2A12		100/10/1 KHz Frequency Control PWB Assembly: MFR 14304, PN 1920-2230	
C1 to C3		Capacitor, Fixed, Ceramic, 0.1 μF, ±20%, 50V: MFR 14304, PN C11-0005-104	
CR1 to CR12		Diode: Type 1N3064	
R1		Resistor, Fixed, Composition, 10K, ±10%, 1/4W: MIL Type RCR07G103KM	
R2		Resistor, Fixed, Composition, 4.7K, ±10%, 1/4W: MIL Type RCR07G472KM	
R3		Resistor, Fixed, Composition, 10K, ±10%, 1/4W: MIL Type RCR07G103KM	
R4		Resistor, Fixed, Composition, 4.7K, ±10%, 1/4W: MIL Type RCR07G472KM	
R5		Resistor, Fixed, Composition, 10K, ±10%, 1/4W: MIL Type RCR07G103KM	
R6		Resistor, Fixed, Composition, 4.7K, ±10%, 1/4W: MIL Type RCR07G472KM	

REF DESIG	NOTES	NAME AND DESCRIPTION	FIG. NO.
R7		Resistor, Fixed, Composition, 10K, ±10%, 1/4W: MIL Type RCR07G103KM	
R8		Resistor, Fixed, Composition, 4.7K, ±10%, 1/4W: MIL Type RCR07G472KM	
R9		Resistor, Fixed, Composition, 10K, ±10%, 1/4W: MIL Type RCR07G103KM	
R10		Resistor, Fixed, Composition, 4.7K, ±10%, 1/4W: MIL Type RCR07G472KM	
R11		Resistor, Fixed, Composition, 10K, ±10%, 1/4W: MIL Type RCR07G103KM	
R12		Resistor, Fixed, Composition, 4.7K, ±10%, 1/4W: MIL Type RCR07G472KM	
R13		Resistor, Fixed, Composition, 10K, ±10%, 1/4W: MIL Type RCR07G103KM	
R14		Resistor, Fixed, Composition, 4.7K, ±10%, 1/4W: MIL Type RCR07G472KM	
R15		Resistor, Fixed, Composition, 10K, ±10%, 1/4W: MIL Type RCR07G103KM	

TABLE 5. FREQUENCY CONTROL 100/10/1 KHZ PWB ASSEMBLY PARTS LIST (Cont)

REF DESIG	NOTES	NAME AND DESCRIPTION	FIG. NO.
R16		Resistor, Fixed, Composition, 4.7K, ±10%, 1/4W: MIL Type RCR07G472KM	
R17		Resistor, Fixed, Composition, 10K, ±10%, 1/4W: MIL Type RCR07G103KM	
R18		Resistor, Fixed, Composition, 4.7K, ±10%, 1/4W: MIL Type RCR07G472KM	
R19		Resistor, Fixed, Composition, 10K, ±10%, 1/4W: MIL Type RCR07G103KM	
R20		Resistor, Fixed, Composition, 4.7K, ±10%, 1/4W: MIL Type RCR07G472KM	
R21		Resistor, Fixed, Composition, 10K, ±10%, 1/4W: MIL Type RCR07G103KM	
R22		Resistor, Fixed, Composition, 4.7K, ±10%, 1/4W: MIL Type RCR07G472KM	

REF DESIG	NOTES	NAME AND DESCRIPTION	FIG. NO.
R23		Resistor, Fixed, Composition, 10K, ±10%, 1/4W: MIL Type RCR07G103KM	
R24		Resistor, Fixed, Composition, 4.7K, ±10%, 1/4W: MIL Type RCR07G472KM	
R25		Resistor, Fixed, Composition, 1K, ±10%, 1/4W: MIL Type RCR07G102KM	
R26 to R31		Resistor, Fixed, Composition, 2.7K, ±5%, 1/4W: MIL Type RCR07G272JM	
U1 to U8		Integrated Circuit: MFR 01295, PN SN74L00N	
U9 to U11		Integrated Circuit: MFR 12040, PN LM324N	

TABLE 6. INDEX OF MANUFACTURERS' CODES

MFR CODE	MFR NAME AND ADDRESS
01295	Texas Instruments, Inc. Semiconductor Group P.O. Box 5012 13500 North Central Expressway Dallas, Texas 75222
04713	Motorola, Inc. Semiconductor Products Division 5005 East McDowell Road Phoenix, Arizona 85036
12040	National Semiconductor Corporation P.O. Box 443, Commerce Drive Danbury, Connecticut 06810
14304	Harris Corporation RF Communications Division 1680 University Avenue Rochester, New York 14610
17856	Siliconix, Inc. 2201 Laurelwood Road Santa Clara, California 95054

NOTES:

1. Unless otherwise specified, all capacitors are in microfarads, and all resistors are in ohms, $\frac{1}{4}$W, $\pm$10%. Diodes are 1N3064.
2. AR1 thru AR8 are MC1458CP1. Pin 8 is +15Vdc, and pin 4 is -15Vdc.
3. U1 thru U5 are SN74L00N. Pin 14 is +15Vdc, and pin 7 is ground.
4. Jumper is normally installed between E2 and E3. When the receiver is used with the RF-574 interconnection option, the jumper is moved to E1 and E2 to enable transceiver remote operation.
5. Prefix all reference designations with A2A9.
6. CR34 is used for RF-566 option only.

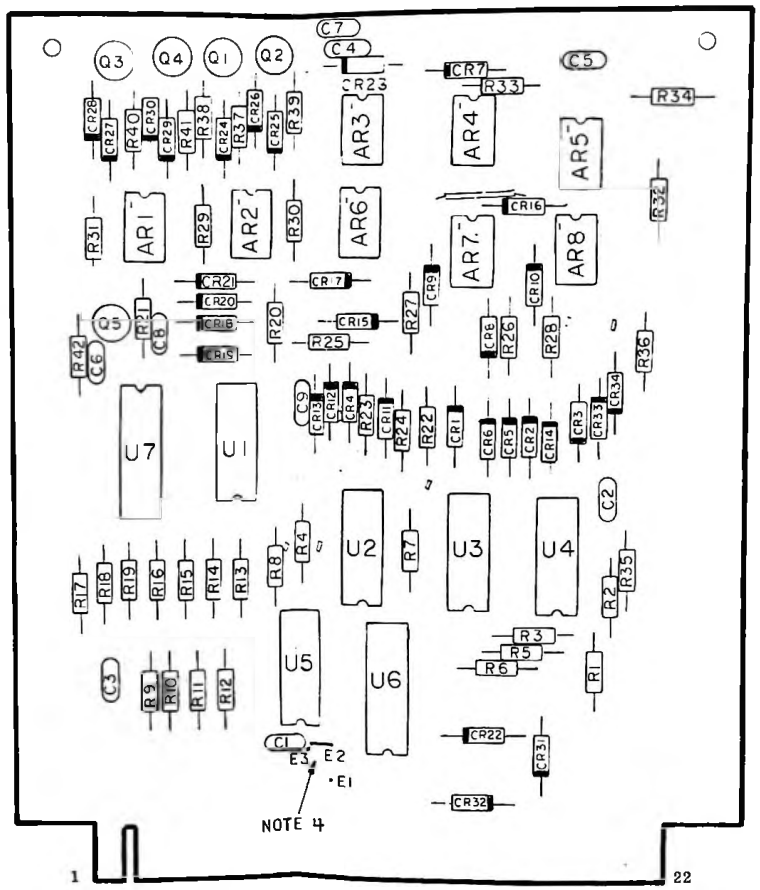

LOCAL AM CONTROL
LOCAL CW CONTROL
LOCAL USB CONTROL
LOCAL LSB CONTROL
LOCAL 2TSB CONTROL
LOCAL 4TSB CONTROL
MUTE CONTROL
FREQ./XCVR. MNT. ENABLE
FULL REMOTE ENABLE
REMOTE MODE A
REMOTE MODE B
REMOTE MODE C
LOCAL SLOW AGC CONTROL
LOCAL FAST AGC CONTROL
LOCAL CON. AGC CONTROL
LOCAL EXT AGC CONTROL
REMOTE AGC A
REMOTE AGC B
REMOTE AGC C

Figure 3. Control I PWB, Component Locations

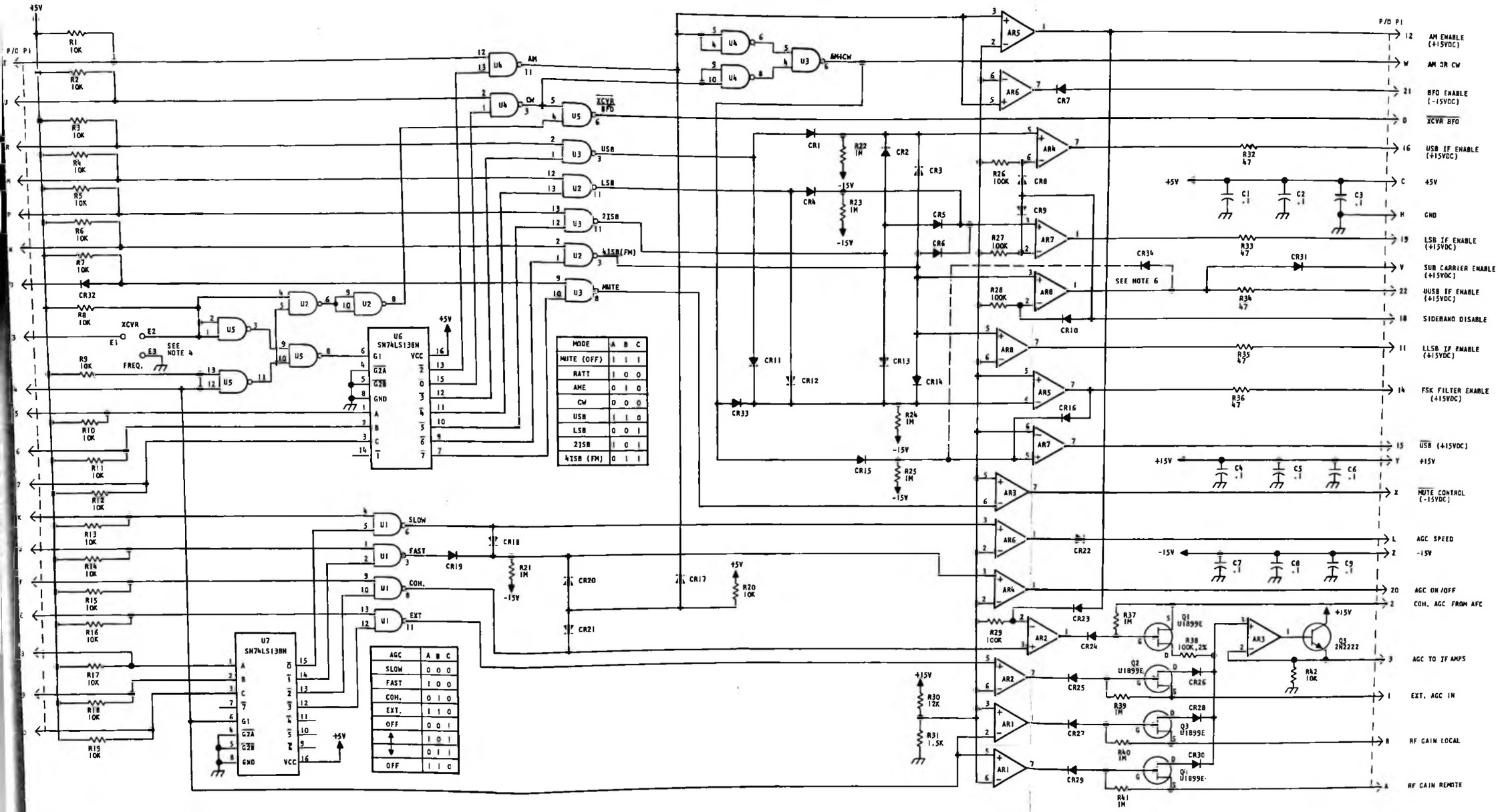

Figure 4. Control I PWB, Schematic Diagram

NOTES:

1. Unless otherwise specified, all capacitances are in microfarads, all inductances are in microhenries, and all resistances are in ohms, $\frac{1}{4}$W, $\pm$10%.
2. All diodes are 1N3064.
3. AR2 thru AR5 are MC1458CP1. Pin 8 is +15Vdc, and pin 4 is -15Vdc.
4. U1 thru U4 are SN74L00N. U5 and U7 are SN74L10N. Pin 14 is +5 Vdc and pin 7 is ground.
5. AR1 is a LM324. Pin 4 is +5Vdc and pin 11 is ground.
6. Jumper is normally installed between E1 and E2. For use with RF-574 Interconnect option, move jumper to E1 and E3 to enable transceiver remote operation.
7. Prefix all reference designations with A2A10.
8. Jumpers are normally installed between E7 and E8, and E4 and E6. For preset bandwidth in transceiver remote, jumper E7 to E9, and E4 to E5. Install feedthru jumper in E6.

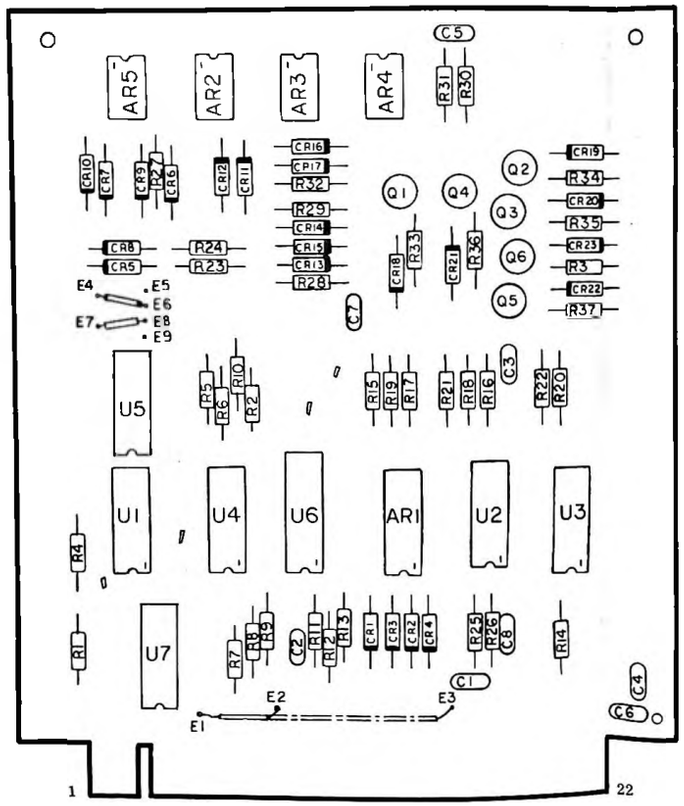

Figure 5. Control II PWB, Component Locations

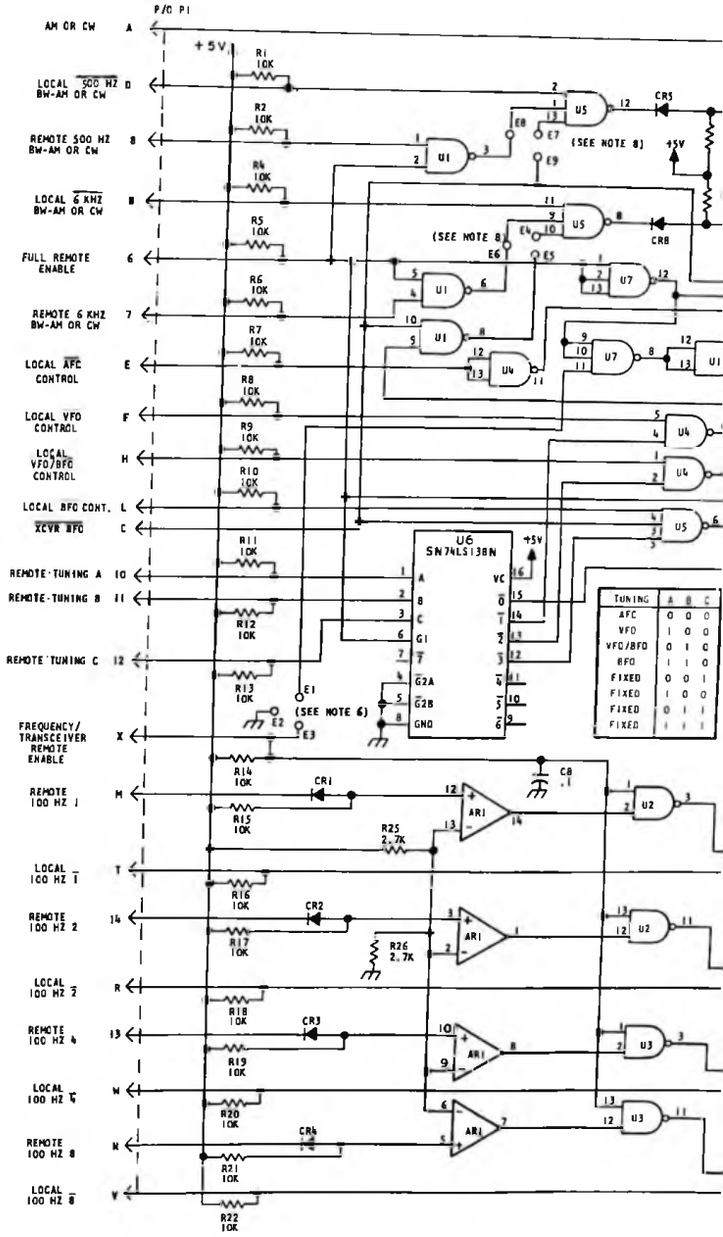

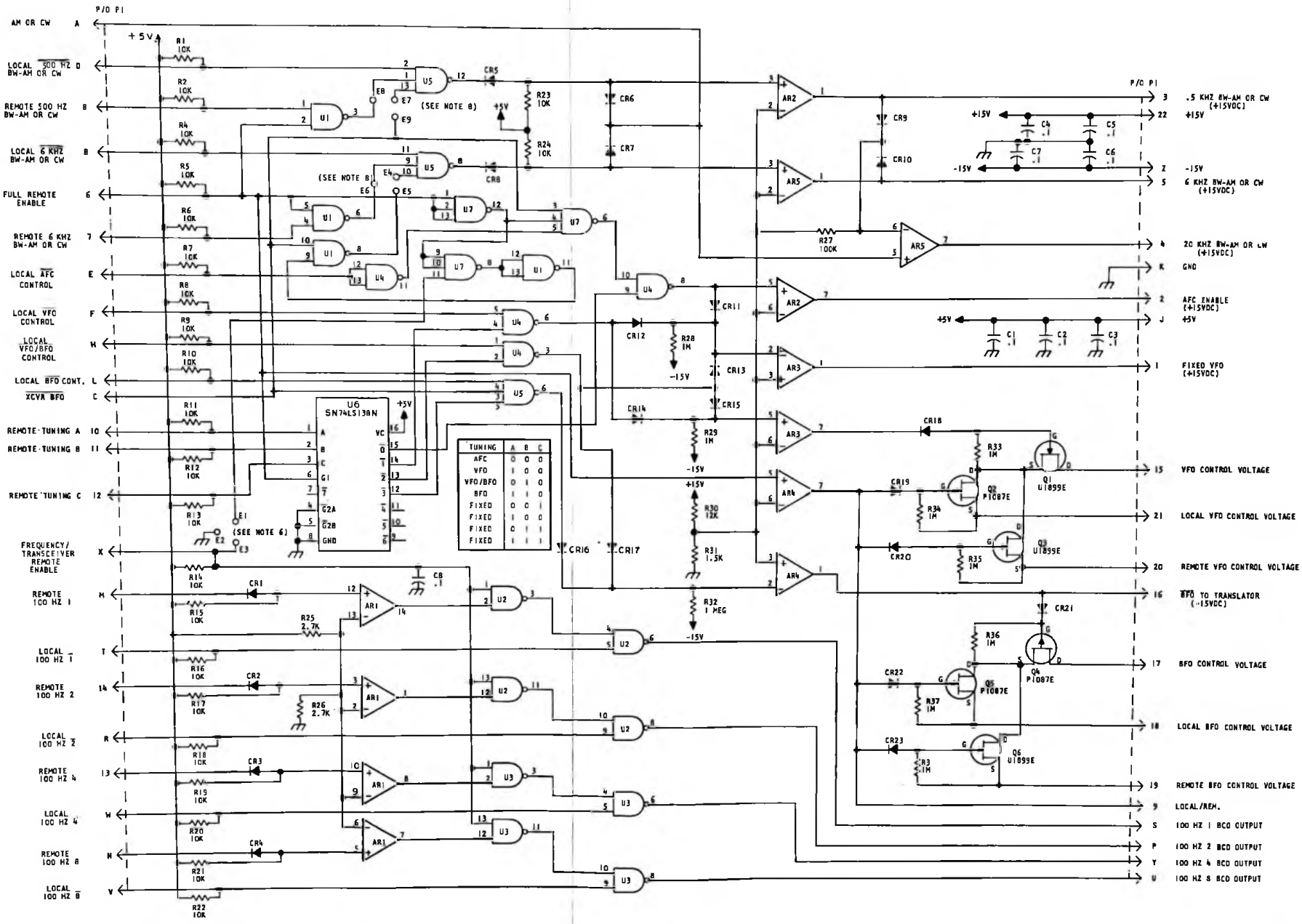

Figure 6. Control II PWB, Schematic Diagram

NOTES:

1. Unless otherwise specified, all resistors are $\frac{1}{4}$W, $\pm$10%. All diodes are 1N3064.
2. U1 thru U6, U9 and U14 are SN74L00N. Pin 7 is ground and pin 14 is +5Vdc.
3. U7 is SN74LS11N. Pin 7 is ground and pin 14 is +5Vdc.
4. U8 and U13 are SN74L10N. Pin 7 is ground and pin 14 is +5Vdc.
5. U10, U11, and U12 are SN74LS15N. Pin 7 is ground and pin 14 is +5Vdc.
6. U15 and U16 are LM324. Pin 11 is ground and pin 4 is +5Vdc.
7. Prefix all reference designators with A2A11.

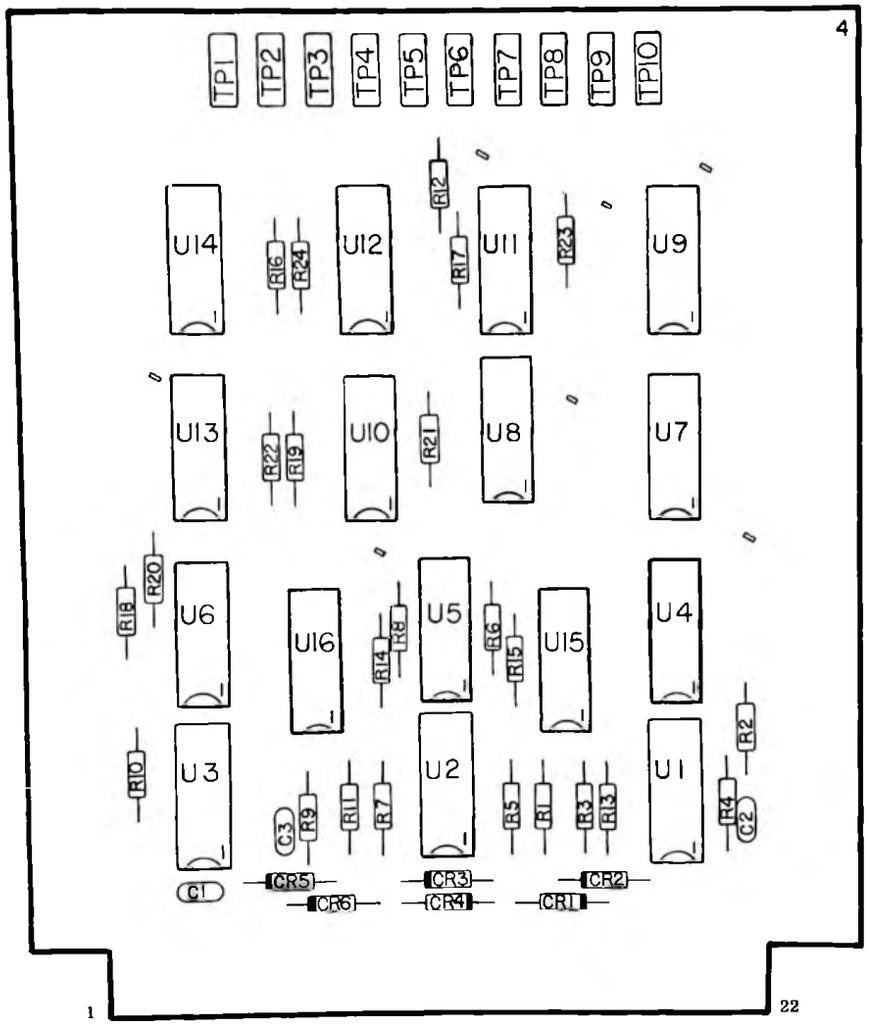

Figure 7. Frequency Control 10/1 MHz PWB, Component Locations

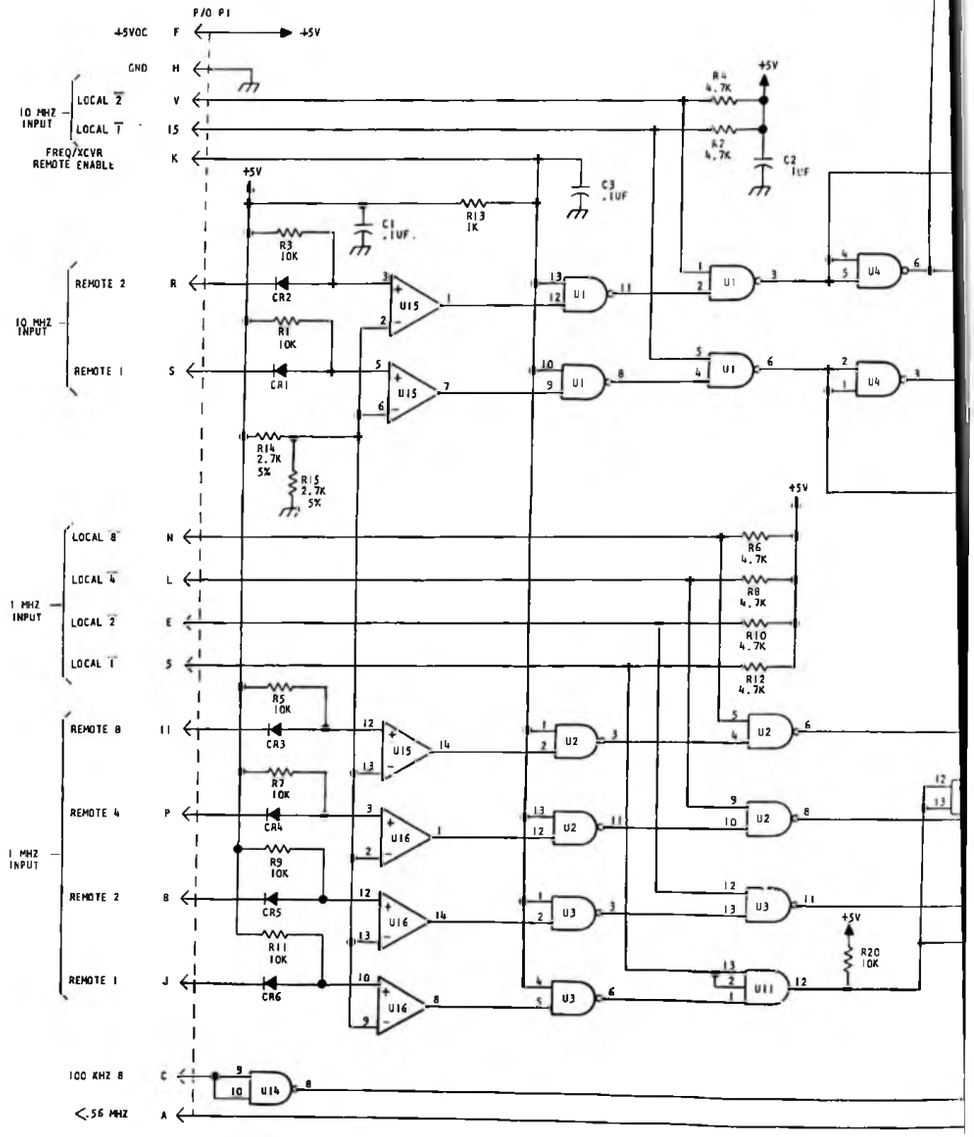

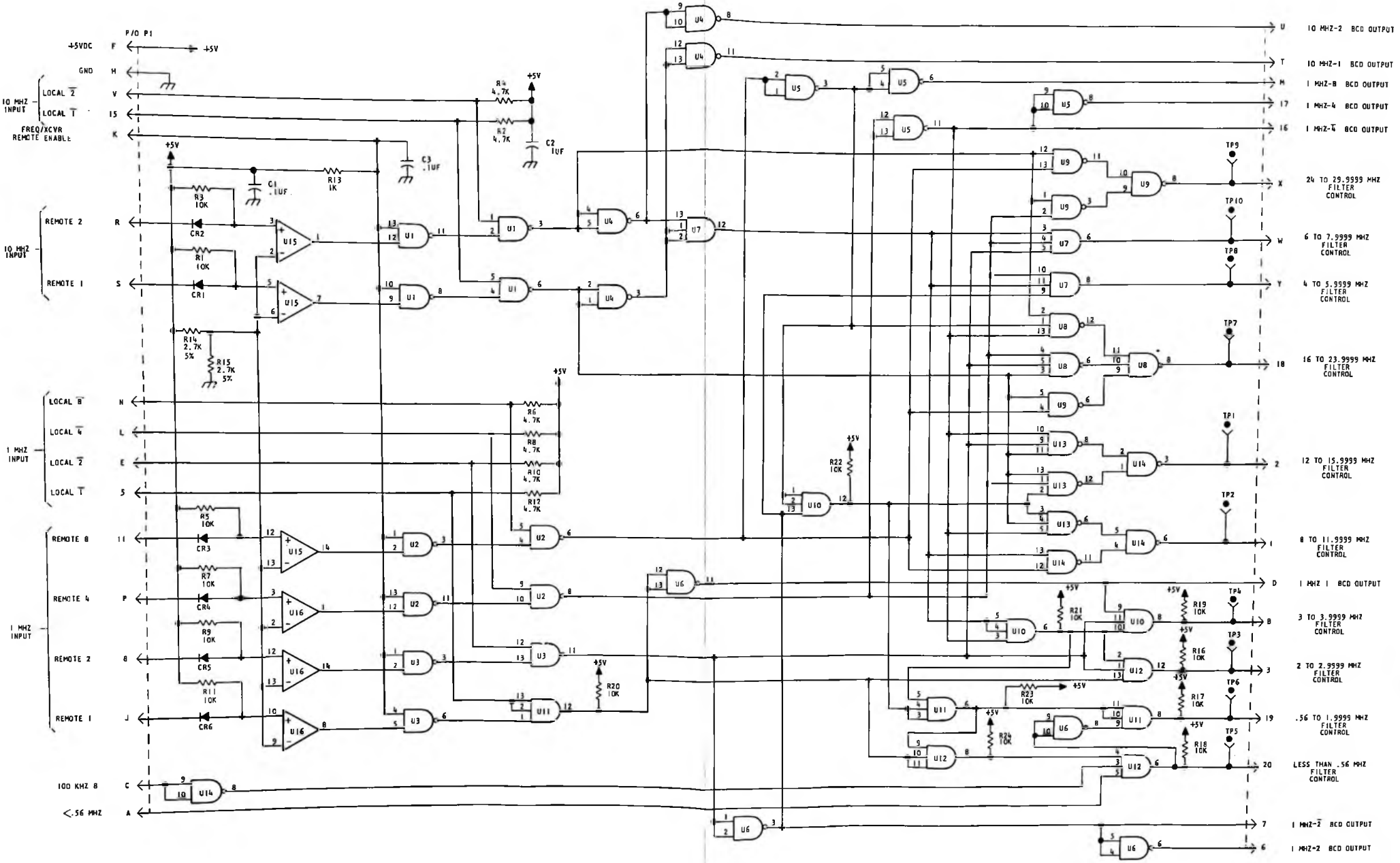

Figure 8. Frequency Control
10/1 MHz PWB, Schematic Diagram

NOTES:

1. Unless otherwise specified, all capacitances are in microfarads, and resistances are in ohms, $\frac{1}{4}$W, $\pm$10%. All diodes are 1N3064.
2. U1 thru U8 are SN74L00N. Pin 7 is ground and pin 14 is +5Vdc.
3. U9 thru U11 are LM324N. Pin 11 is ground and pin 4 is +5Vdc.
4. Prefix all reference designators with A2A12.

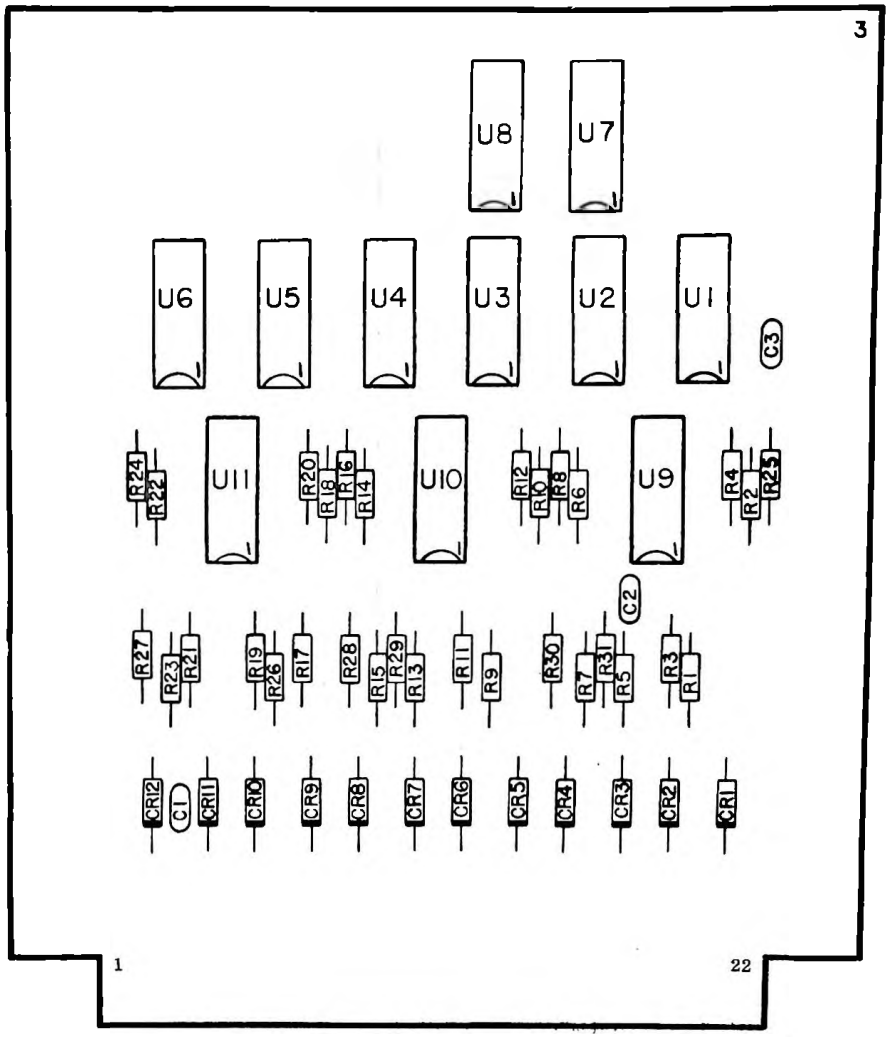

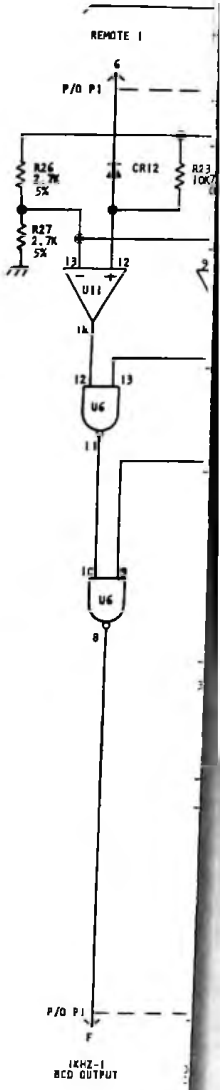

Figure 9. Frequency Control 100/10/1 KHz PWB, Component Locations

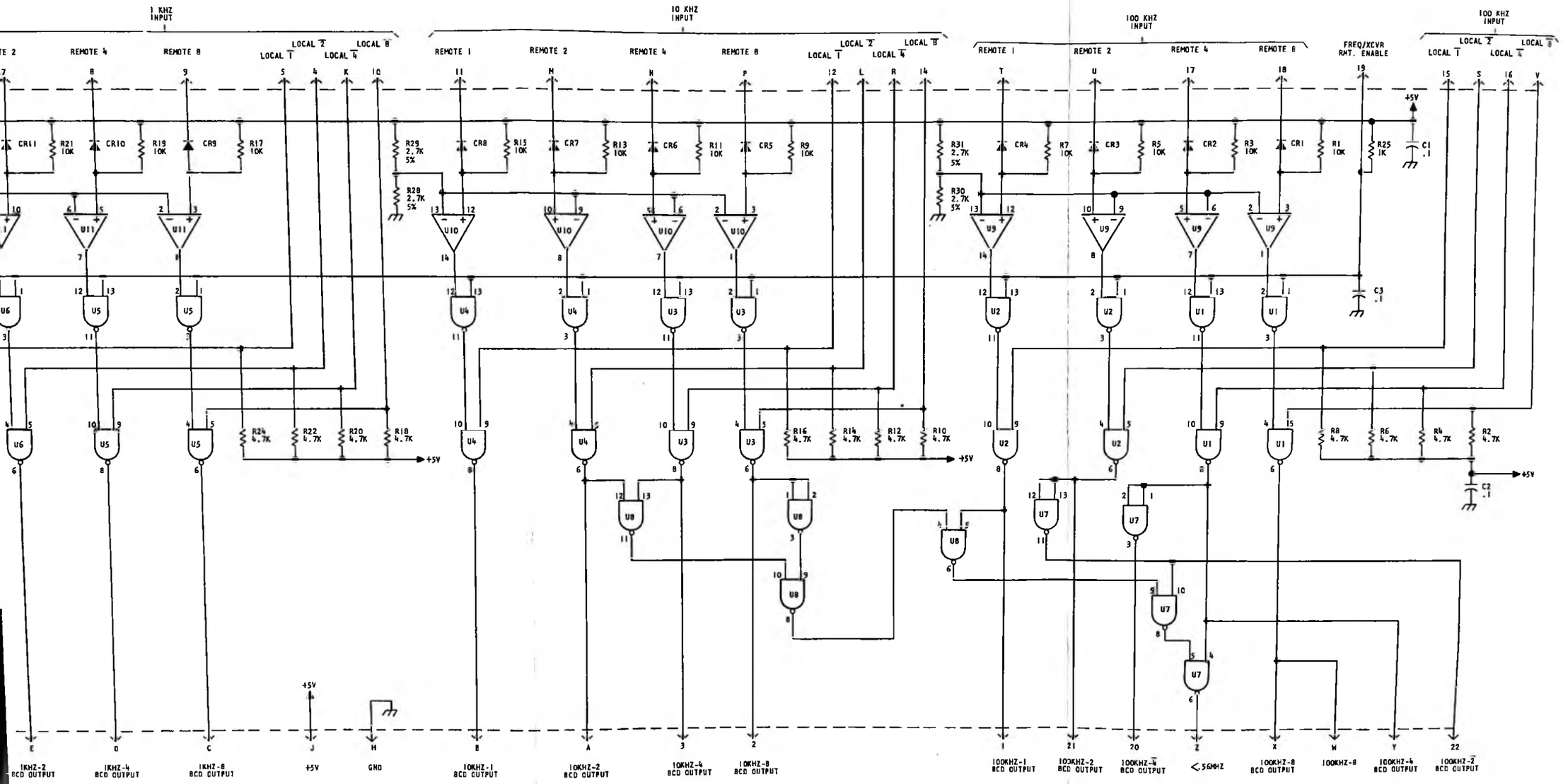

Figure 10. Frequency Control
100/10/1 KHz PWB, Schematic Diagram

A2A13

UNIT INSTRUCTIONS

not in

SUBCARRIER GENERATOR ASSEMBLY

A2A13

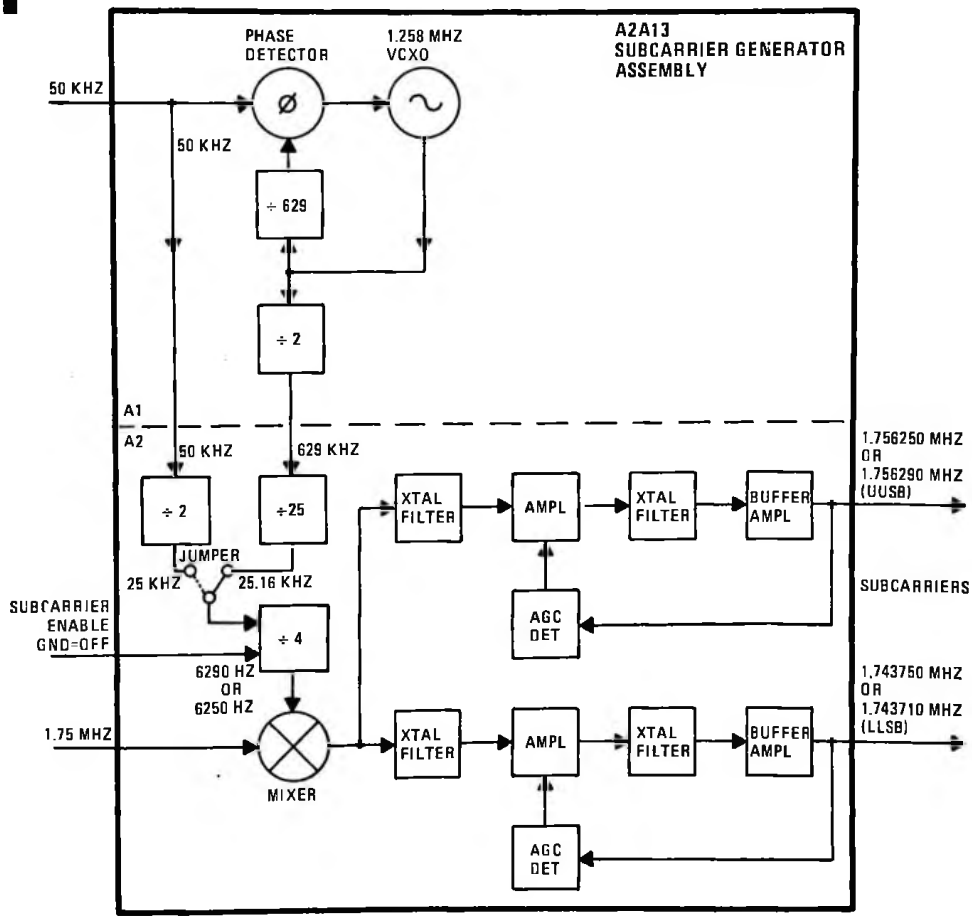

1. GENERAL DESCRIPTION

Subcarrier Generator Assembly A2A13 generates frequencies required to establish the positions of the two "outside" sideband channels (UUSB and LLSB). In the RF-550 Receiver, those frequencies are used in the detection of UUSB and LLSB signals on Audio Output Assembly A2A6A3. This Assembly is also used in the RF-131 Exciter to generate frequencies required to translate the audio signals to the appropriate channels. Assembly A2A13 comprises Offset Generator PWB A1 and Subcarrier Generator PWB A2, as shown in the block diagram on the cover sheet for this section. Depending on assembly strapping and trimming adjustments on PWB Assembly A2, the following subcarrier frequencies can be generated: 1.743710 (LLSB) and 1.756290 (UUSB) for 6290 Hz offset channels or 1.743750 (LLSB) and 1.756250 (UUSB) for 6250 Hz offset channels. When frequencies of 1.743710 MHz and 1.756290 MHz are required, a phase locked crystal oscillator on PWB Assembly A1 generates a 629 kHz offset frequency. This signal is divided by 100 on PWB Assembly A2 and mixed with a 1.75 MHz signal from VFO/BFO Translator Assembly A2A15 in the RF-550 Receiver. The sum and difference products of this mixing are the required subcarrier output frequencies. When BFO frequencies of 1.743750 and 1.756250 are required, the output of PWB Assembly A1 is not used, and the offset frequency is obtained by dividing a 50 kHz input signal by 8 on PWB Assembly A2. The resultant 6250 Hz offset frequency is mixed with the 1.75 MHz signal to provide the output frequencies. The selection of which sets of frequencies are generated is determined by strapping on PWB Assembly A2. The output frequencies are gain-controlled and adjustable to provide output levels of 75 mVrms to the UUSB and LLSB product detectors. For detailed RF-131 usage information, refer to instruction manual 0759-9002D.

2. TECHNICAL CHARACTERISTICS

Dimensions:
4.125H x 2.125W x 5.875D (inches)
10.48H x 5.39W x 14.92D (cms)

Power Requirements:
+5 Vdc at 150 mA
+6 Vdc at 44 mA
-6 Vdc at 32 mA
+18 Vdc at 7 mA

Signal Inputs:
50 kHz at 2.4V p-p min.
1.75 MHz at 75 mVrms

Subcarrier Enable (Logic):
$>$ 1.0 Vdc = on
$\leq$ 0 Vdc (appx) = off

Signal Outputs:
1.743710 and 1.756290 MHz at 75 mVrms for 6290 Hz offset
1.743750 and 1.756250 MHz at 75 mVrms for 6250 Hz offset

Impedance (RF inputs and outputs):
50 ohms

3. SEMICONDUCTOR COMPLEMENT

REF. DESIG.	TYPE	DESCRIPTION
A2A13A1		
CR1	1N3064	Diode
CR2	MV1638	Diode (Voltage Variable-Capacitance)
CR3	1N3064	Diode
Q1	2N4123	Transistor
Q2	2N4125	Transistor
Q3	3N153	Transistor
Q4	2N4264	Transistor
Q5	3N153	Transistor
Q6	2N5089	Transistor
Q7	2N5179	Transistor
Q8 & Q9	2N4123	Transistor
Z1	SN7472N	J-K Flip-Flop
Z2	SN74H00N	Quad 2-Input NAND
Z3	SN7430N	8-Input NAND
Z4	SN7493N	4-Bit Binary Counter
Z5	SN7476N	Dual J-K Flip-Flop
Z6	SN7490N	Decade Counter

3. SEMICONDUCTOR COMPLEMENT (Continued)

REF. DESIG.	TYPE	DESCRIPTION
A2A13A2		
Q1 & Q2	Not Used	Transistor
Q3 through Q5	2N4123	Transistor
Q6 through Q9	2N4125	Transistor
Z1 & Z2	SN74L90N	Decade Counter
Z3	SN76514L	Double Balanced Mixer
Z4 & Z5	CA3028A	Differential/Cascade Amplifier
Z6	SN7472N	J-K Flip-Flop

4. CIRCUIT DESCRIPTION

4.1 OFFSET GENERATOR PWB A2A13A1

The 6290 Hz offset frequency is generated by phaselocking a 1.258 MHz VCXO to a reference frequency derived from the 1 MHz standard. This frequency is divided by 2 on PWB Assembly A1 and then by 100 on PWB Assembly A2.

Referring to figure 4, the 1.258 MHz VCXO (Q7, crystal Y1, and variable capacitance diode CR2) is followed by amplifiers Q8 and Q9. The output of Q9 is TTL compatible; that is, it will drive TTL dividers Z1 and Z6. The output of Z1 (÷ 2) is 629 kHz and is applied to PWB Assembly A2 where it is divided by 100 to become the 6290 Hz offset frequency. Z6 is the first stage of a ÷ 629 counter. Z6 through Z4 form a basic "divide-by-640" circuit; division by 629 is accomplished by Z3, which detects the count of 629 and resets the divider to zero via Z2. The output at Z2-3 is a negative-going pulse which resets Z5, and the output at Z2-6 is a positive-going pulse which resets Z4 and Z6. The 2.0 kHz divider output is applied through amplifier Q4 to sampling FET Q3 in the sample-and-hold phase detector.

A 50 kHz square-wave from Frequency Standard Assembly A2A7 is applied through P1-P to Z2-9. The output of Z2-8 is applied through amplifier Q1 to ramp discharge transistor Q2. A ramp waveform is established by charging C24 through R9 and then quickly discharging C24 through Q2 at the 50 kHz reference rate. Each pulse from the ÷ 629 turns on Q3 momentarily, sampling the ramp at that time. The sampled voltage is stored on memory capacitor C11, where it is held between samples. Q5 is a MOS-FET connected as a source follower to minimize loading on the memory capacitor. Q6 amplifies the output of the phase detector and, by adjusting the bias voltage of CR2, controls the oscillator frequency, completing the loop. R12 can be adjusted to compensate for differences in offset voltages on individual MOS-FETS. For further information on phase locked loops, see the section covering Low Band PLL Assembly A2A14 in this manual.

4.2 SUBCARRIER GENERATOR PWB A2A13A2

4.2.1 6290 Hz Offset

The 629 kHz signal from Offset Generator PWB A1 is applied to frequency dividers Z1 and Z2. Z1 and Z2 are digital counters with ÷ 2, ÷ 5 or ÷ 10 capabilities. When a 6290 Hz offset frequency is desired, A2E16 is strapped to A2E17. Then the 629 kHz input from A1 is divided by five on Z2, by 10 on Z1 and then by 2 on Z2 again to make a total division of 100, with a 50 percent duty cycle. This output is then applied to the input of mixer Z3.

4.2.2 6250 Hz Offset

When a 6250 Hz offset is desired, A2E16 is strapped to A2E18. Then the 50 kHz input from VFO/BFO Translator Assembly A2A15 is divided by eight to obtain 6250 Hz. The ÷ 8 is accomplished by using the ÷ 2 in Z6, then the ÷ 2 portions of Z1 and Z2 successively. As in the case of the 6290 Hz offset, the output of Z2 is applied to mixer Z3.

4.2.3 Either Offset

Whichever offset is used, the output from the subcarrier generator is desired only when 4 ISB has been selected. To accomplish this, a positive voltage is applied to the base of Q3 through R33 from the Control 1 PWB A2A9. This positive voltage turns on Q3, grounding pin 2 of Z2. Pin 2 of Z2 must be at ground for Z2 to provide an output. Since either the 6250 Hz or the 6290 Hz signal appears at the output of Z2, this control circuit effectively controls the output of the subcarrier generator. Thus, when Q3 is turned on, the proper frequency appears at the input to mixer Z3.

The mixer also receives a 1.75 MHz carrier frequency input in addition to the offset frequency signal. This signal is applied to Z3, pin 4. The resulting outputs from the mixer are thus 1.75 MHz plus the offset frequency and 1.75 MHz minus the offset frequency. These outputs are applied to the inputs of two filter stages.

Since the two filters are identical, except for cyrstal frequency, only one filter is described.

The mixer output is capacitively coupled through C22 to the first crystal filter consisting of Y1, C7, and T1. Crystal Y1 is cut midway between the two possible UUSB offset frequencies at 1.756270 MHz. (The other filter is cut for 1.743730 MHz for the opposite (LLSB) sideband channel). Capacitor C7 cancels capacitive coupling through the crystal to T1. The output of T1 is applied to Z4 which functions as a limiting amplifier with a maximum voltage gain of about 10. The output signal from amplifier Z4 is coupled through C24 to the second filter consisting of Y2, C25, and T2. Y2 is cut to the same frequency as Y1. Trimmer C25 provides fine adjustment to null undesired mixing products. Buffer amplifier Q4 provides a fixed load for the second crystal filter, and additional voltage gain. The output of Q4 will then be either 1.756290 or 1.756250 MHz. Resistor R32, in the attenuator network comprising R31, R32, and R33, is adjusted for an output of 75 mVrms (-9.5 dBM) into a 50-ohm load.

An automatic gain control (AGC) loop is formed by Q4, Q6, Q7, C33, and Z4. Q6, Q7, and C33 form an RF detector which applies a voltage to Z4 proportional to the output level. This voltage controls the voltage gain of Z4 by varying the current through the differential amplifier.

5. MAINTENANCE

5.1 OFFSET GENERATOR PWB, ADJUSTMENT PROCEDURE

Upon replacement of any component on the Offset Generator PW Board the following adjustment procedure should be performed.

(1) Connect channel 1 of a Tektronix 453 (or equivalent) scope to A2A13A1TP4 using a high impedance probe and adjust the scope to trigger on this waveform.

(2) Similarly connect channel 2 of the scope to A2A13A1TP3, and put the scope in "chopped" mode.

(3) Insure that the scope is still triggering on the TP4 waveform.

(4) Adjust A2A13A1R12 so that the TP3 waveform remains fixed with respect to the TP4 waveform instead of slowly drifting.

(5) Further adjust R12 so that each TP4 pulse is centered between the two TP3 pulses occurring immediately before and after it.

5.2 ALIGNMENT SUBCARRIER GENERATOR PWB

(1) Connect HP 8553B/8552B (or equivalent) Spectrum Analyzer to Assembly output P1-A. Adjust C25 for carrier spur content $\pm$ 50 kHz $\leq$ -50 dB. Adjust R32 for -9.5 dBm. output level.

(2) Connect HP8553B/8552B (or equivalent) Spectrum Analyzer to Assembly output P1-C. Adjust C29 for spur content $\pm$ 50 kHz $\leq$ -50 dB. Adjust R41 for -9.5 dBm.

6. PARTS LIST

Table 1 is a list of parts for the Subcarrier Generator Assembly. Manufacturers are referenced by code number. For a listing of manufacturers' names and address, refer to table 2.

7. COMPONENT LOCATION AND SCHEMATIC DIAGRAMS

Figure 1 through 6 are component location and schematic diagrams for the Subcarrier Generator Assembly.

NOTICE

In some instances, the Integrated Circuit (IC) component types listed herein differ from those of the actual component. These components are physically and electronically interchangeable. Either type can be used for replacement purposes.

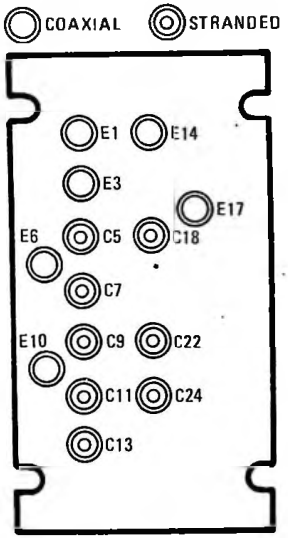

Figure 1. Filter Plate Assembly

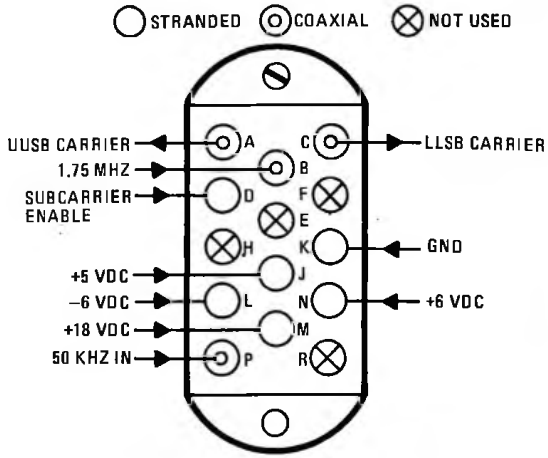

Figure 2. Chassis Connector (Top View)

TABLE 1. PARTS LIST

REF DESIG	NOTES	NAME AND DESCRIPTION	FIG. NO.
A2A13		Subcarrier Generator Assembly: MFR 14304, PN 1976-4300	
FL1		Filter Plate Assembly: MFR 14304, PN 0759-4304	
FL1C1 to FL1C4		Not Used	
FL1C5		Capacitor, Feed-Thru, Ceramic, 1750 pF, 250V: MFR 72982, PN 1214-001	
FL1C6		Not Used	
FL1C7		Capacitor, Feed-Thru, Ceramic, 1750 pF, 250V: MFR 72982, PN 1214-001	
FL1C8		Not Used	
FL1C9		Capacitor, Feed-Thru, Ceramic, 1750 pF, 250V: MFR 72982, PN 1214-001	
FL1C10		Not Used	
FL1C11		Capacitor, Feed-Thru, Ceramic, 1750 pF, 250V: MFR 72982, PN 1214-001	
FL1C12		Not Used	
FL1C13		Capacitor, Feed-Thru, Ceramic, 1750 pF, 250V: MFR 72982, PN 1214-001	
FL1C14 to FL1C17		Not Used	
FL1C18		Capacitor, Feed-Thru, Ceramic, 1750 pF, 250V: MFR 72982, PN 1214-001	
FL1C19 to FL1C21		Not Used	
FL1C22		Capacitor, Feed-Thru, Ceramic, 1750 pF, 250V: MFR 72982, PN 1214-001	
FL1C23		Not Used	
FL1C24		Capacitor, Feed-Thru, Ceramic, 1750 pF, 250V: MFR 72982, PN 1214-001	
MP1 to MP4		Connector Pin, Coaxial, Male: MFR 81312, PN 100-8000S	
MP5 to MP10		Connector Pin, Male: MIL Type MS17803-16-20	
P1		Connector, Rectangular, 14 Pin: MFR 81312, PN MRAC14PN7	
A2A13A1		Offset Generator PW Board Assembly: MFR 14304, PN 0759-4310	
C1		Capacitor, Fixed, Ceramic, 0.1 µF, ±20%, 50V: MFR 14304, PN C11-0005-104	

TABLE 1. PARTS LIST (Cont)

REF DESIG	NOTES	NAME AND DESCRIPTION	FIG. NO.
C2		Capacitor, Fixed, Tantalum, 47 μF, ±20%, 20V: MIL Type CSR13E476ML	
C3		Capacitor, Fixed, Ceramic, 0.1 μF, ±20%, 50V: MFR 72982, PN 8101-050-651-104M	
C4		Capacitor, Fixed Ceramic, 1800 pF, ±10%, 100V: MFR 83125, PN DC-182K	
C5		Capacitor, Fixed, Ceramic, 470 pF, ±10%, 200V: MFR 83125, PN DC-471K	
C6		Capacitor, Fixed, Ceramic, 0.1 μF, ±20%, 50V: MFR 14304, PN C11-0005-104	
C7, C8		Capacitor, Fixed, Tantalum, 6.8 μF, ±20%, 35V: MIL Type CSR13F685ML	
C9		Capacitor, Fixed, Ceramic, 0.1 μF, ±20%, 50V: MFR 14304, PN C11-0005-104	
C10		Capacitor, Fixed, Tantalum, 68 μF, ±20%, 15V: MIL Type CSR13D686ML	

REF DESIG	NOTES	NAME AND DESCRIPTION	FIG. NO.
C11		Capacitor, Fixed, Ceramic, 1000 pF, ±10%, 100V: MFR 83125, PN DC-102K	
C12		Capacitor, Fixed, Ceramic, 0.1 μF, ±20%, 50V: MFR 14304, PN C11-0005-104	
C13		Capacitor, Fixed, Ceramic, 0.01 μF, ±20%, 50V: MFR 14304, PN C11-0005-103	
C14		Capacitor, Fixed, Tantalum, 22 μF, ±20%, 15V: MIL Type CSR13D226ML	
C15		Capacitor, Fixed, Ceramic, 10 pF, ±10%, 200V: MFR 83125, PN DC-100K	
C16		Capacitor, Fixed, Ceramic, 0.01 μF, ±20%, 50V: MFR 14304, PN C11-0005-103	
C17		Capacitor, Fixed, Ceramic, 1000 pF, ±10%, 100V: MFR 83125, PN DC-102K	
C18		Capacitor, Fixed, Ceramic, 0.1 μF, ±20%, 50V: MFR 14304, PN C11-0005-104	

TABLE 1. PARTS LIST (Cont)

REF DESIG	NOTES	NAME AND DESCRIPTION	FIG. NO.
C19 to C21		Capacitor, Fixed, Ceramic, 0.01 μF, ±20%, 50V: MFR 14304, C11-0005-103	
C22		Capacitor, Fixed, Tantalum, 47 μF, ±20%, 35V: MIL Type CSR13F476ML	
C23		Capacitor, Fixed, Ceramic, 0.1 μF, ±20%, 50V: MFR 14304, PN C11-0005-104	
C24		Capacitor, Fixed, Ceramic, 3300 pF, ±10%, 100V: MFR 83125, PN DC-332K	
C25		Capacitor, Fixed, Ceramic, 0.1 μF, ±20%, 50V: MFR 14304, PN C11-0005-104	
CR1		Diode: Type 1N3064	
CR2		Diode: MFR 04713, PN MV1638	
CR3		Diode: Type 1N3064	
L1		Inductor, Fixed, RF, 15 μH: MFR 99800, PN 1537-40	
L2		Inductor, Fixed, RF, 240 μH: MFR 99800, PN 1537-94	
L3		Inductor, Fixed, RF, 1 mH: MFR 99800, PN 2500-28	

REF DESIG	NOTES	NAME AND DESCRIPTION	FIG. NO.
Q1		Transistor, NPN: Type 2N4123	
Q2		Transistpr, PNP: Type 2N4125	
Q3		Transistor, FET: Type 3N153	
Q4		Transistor, NPN: Type 2N4264	
Q5		Transistor, FET: Type 3N153	
Q6		Transistor, NPN: Type 2N5089	
Q7		Transistor, NPN: Type 2N5179	
Q8, Q9		Transistor, NPN: Type 2N4123	
R1, R2		Resistor, Fixed, Composition, 470 ohms, ±10%, 1/4W: MIL Type RC07GF471K	
R3		Resistor, Fixed, Composition, 2.2K, ±10%, 1/4W: MIL Type RC07GF222K	
R4		Resistor, Fixed, Composition, 4.7K, ±10%, 1/4W: 1/4W: MIL Type RC07GF472K	
R5		Resistor, Fixed, Composition, 560 ohms, ±10%, 1/4W: MIL Type RC07GF561K	

TABLE 1. PARTS LIST (Cont)

REF DESIG	NOTES	NAME AND DESCRIPTION	FIG. NO.
R6		Resistor, Fixed, Composition, 1.8K, ±10%, 1/4W: MIL Type RC07GF182K	
R7		Resistor, Fixed, Composition, 820 ohms, ±10%, 1/4W: MIL Type RC07GF821K	
R8		Resistor, Fixed, Composition, 680 ohms, ±10%, 1/4W: MIL Type RC07GF681K	
R9		Resistor, Fixed, Film, 12.1K, ±1%, 1/8W: MIL Type RN55D1212F	
R10		Resistor, Fixed, Composition, 680 ohms, ±10%, 1/4W: MIL Type RC07GF681K	
R11		Resistor, Fixed, Film, 1.5K, ±1%, 1/8W: MIL Type RN55D1501F	
R12		Resistor, Variable 500 ohms: MFR 35009, PN 150-1-501	
R13		Resistor, Fixed, Film, 511 ohms, ±1%, 1/8W: MIL Type RN55D5110F	
R14, R15		Resistor, Fixed, Composition, 10K, ±10%, 1/4W: MIL Type RC07GF103K	

REF DESIG	NOTES	NAME AND DESCRIPTION	FIG. NO.
R16		Resistor, Fixed, Composition, 8.2K, ±10%, 1/4W: MIL Type RC07GF822K	
R17		Resistor, Fixed, Composition, 100K, ±10%, 1/4W: MIL Type RC07GF104K	
R18		Resistor, Fixed, Composition, 2.2K, ±10%, 1/4W: MIL Type RC07GF222K	
R19		Resistor, Fixed, Composition, 5.6K, ±10%, 1/4W: MIL Type RC07GF562K	
R20		Resistor, Fixed, Composition, 10K, ±10%, 1/4W: MIL Type RC07GF103K	
R21		Resistor, Fixed, Composition, 2.2K, ±10%, 1/4W: MIL Type RC07GF222K	
R22		Resistor, Fixed, Composition, 150 ohms, ±10%, 1/4W: MIL Type RC07GF151K	
R23		Resistor, Fixed, Composition, 8.2K, ±10%, 1/4W: MIL Type RC07GF822K	

TABLE 1. PARTS LIST (Cont)

REF DESIG	NOTES	NAME AND DESCRIPTION	FIG. NO.
R24		Resistor, Fixed, Composition, 2.7K, ±10%, 1/4W: MIL Type RC07GF272K	
R25		Resistor, Fixed, Composition, 680 ohms, ±10%, 1/4W: MIL Type RC07GF681K	
R26		Resistor, Fixed, Composition, 2.7K, ±10%, 1/4W: MIL Type RC07GF272K	
R27		Resistor, Fixed, Composition, 1K, ±10%, 1/4W: MIL Type RC07GF102K	
R28		Resistor, Fixed, Composition, 6.8K, ±10%, 1/4W: MIL Type RC07GF682K	
R29		Resistor, Fixed, Composition, 100 ohms, ±10%, 1/4W: MIL Type RC07GF101K	
R30		Resistor, Fixed, Composition, 1K, ±10%, 1/4W: MIL Type RC07GF102K	
R31		Resistor, Fixed, Composition, 6.8K, ±10%, 1/4W: MIL Type RC07GF682K	

REF DESIG	NOTES	NAME AND DESCRIPTION	FIG. NO.
R32		Resistor, Fixed, Composition, 15K, ±10%, 1/4W: MIL Type RC07GF153K	
R33		Resistor, Fixed, Composition, 10K, ±5%, 1/4W: MIL Type RC07GF103J	
R34		Resistor, Fixed, Composition, 68 ohms, ±10%, 1/4W: MIL Type RC07GF680K	
R35		Resistor, Fixed, Composition, 2.2K, ±10%, 1/4W: MIL Type RC07GF222K	
R36		Resistor, Fixed, Composition, 270 ohms, ±10%, 1/4W: MIL Type RC07GF271K	
R37		Resistor, Fixed, Composition, 2.2K, ±10%, 1/4W: MIL Type RC07GF222K	
TP1		Not Used	
TP2		Jack, Test Point, PC Board, Red: MFR 14304, PN J60-0001-002	
TP3, TP4		Not Used	
TP5		Jack, Test Point, PC Board, Green: MFR 14304, PN J60-0001-004	

TABLE 1. PARTS LIST (Cont)

REF DESIG	NOTES	NAME AND DESCRIPTION	FIG. NO.
XY1		Socket, Crystal: MFR 91506 PN 8000-AG10-1	
Y1		Crystal, 1.258 MHz: MIL Type CR-18A/U-1.258 MHz	
Z1		Integrated Circuit: MFR 01295, PN SN7472N	
Z2		Integrated Circuit: MFR 01295, PN SN74H00N	
Z3		Integrated Circuit MFR 01295, PN SN7430N	
Z4		Integrated Circuit MFR 01295, PN SN7493N	
Z5		Integrated Circuit MFR 01295, PN SN7476N	
Z6		Integrated Circuit MFR 01295, PN SN7490N	
A2A13A2		Subcarrier Generator PW Board Assembly: MFR 14304, PN 1976-4320	
C1 to C6		Capacitor, Fixed, Ceramic, 0.1 μF, ±20%, 50V: MFR 14304, PN C11-0005-104	
C7		Capacitor, Fixed, Mica, 5 pF, ±1/2 pF, 500V: MIL Type CM05CD050D03	

REF DESIG	NOTES	NAME AND DESCRIPTION	FIG. NO.
C8		Capacitor, Fixed, Ceramic, 0.1 μF, ±20%, 50V: MFR 14304, PN C11-0005-104	
C9		Not Used	
C10		Capacitor, Fixed, Ceramic, 0.1 μF, ±20%, 50V: MFR 14304, PN C11-0005-104	
C11 to C13		Not Used	
C14		Capacitor, Fixed, Mica, 5 pF, ±1/2 pF, 500V: MIL Type CM05CD0J0D03	
C15		Capacitor, Fixed, Ceramic, 0.1 μF, ±20%, 50V: MFR 14304, PN C11-0005-104	
C16		Not Used	
C17		Capacitor, Fixed, Ceramic, 0.1 μF, ±20%, 50V: MFR 14304, PN C11-0005-104	
C18 to C20		Not Used	
C21		Capacitor, Fixed, Tantalum, 47 μF, ±20%, 20V: MIL Type CSR13E476ML	
C22 to C24		Capacitor, Fixed, Ceramic, 0.1 μF, ±20%, 50V: MFR 14304, PN C11-0005-104	

TABLE 1. PARTS LIST (Cont)

REF DESIG	NOTES	NAME AND DESCRIPTION	FIG. NO.
C25		Capacitor, Variable, 2.5-11 pF: MFR 72982, PN 538-014B2.5-11 pF	
C26		Capacitor, Fixed, Ceramic, 0.1 μF, ±20%, 50V: MFR 14304, PN C11-0005-104	
C27		Capacitor, Fixed, Mica, 430 pF, ±5%, 500V: MIL Type CM06FD431J03	
C28		Capacitor, Fixed, Ceramic, 0.1 μF, ±20%, 50V: MFR 14304, PN C11-0005-104	
C29		Capacitor, Variable, 2.5-11 pF: MFR 72982, PN 538-014B2.5-11 pF	
C30		Capacitor, Fixed, Ceramic, 0.1 μF, ±20%, 50V: MFR 14304, PN C11-0005-104	
C31		Capacitor, Fixed, Mica, 430 pF, ±5%, 500V: MIL Type CM06FD431J03	
C32 to C35		Capacitor, Fixed, Ceramic, 0.1 μF, ±20%, 50V: MFR 14304, PN C11-0005-104	

REF DESIG	NOTES	NAME AND DESCRIPTION	FIG. NO.
C36, C37		Capacitor, Fixed, Tantalum, 10 μF, ±20%, 35V: MFR 12954, PN D10GSC35M	
C38, C39		Capacitor, Fixed, Ceramic, 0.1 μF, ±20%, 50V: MFR 14304, PN C11-0005-104	
L1, L2		Inductor, Fixed, RF, 240 μH: MFR 99800, PN 1537-94	
L3		Not Used	
L4, L5		Inductor, Fixed, RF, 240 μH: MFR 99800, PN 1537-94	
L6		Not Used	
L7, L8		Inductor, Fixed, RF, 22 μH: MFR 99800, PN 1537-44	
Q1, Q2		Not Used	
Q3 to Q5		Transistor, NPN: Type 2N4123	
Q6 to Q9		Transistor, PNP: Type 2N4125	
R1, R2		Resistor, Fixed, Composition, 47 ohms, ±10%, 1/4W: MIL Type RC07GF470K	
R3, R4		Resistor, Fixed, Composition, 560 ohms, ±10%, 1/4W: MIL Type RC07GF561K	

TABLE 1. PARTS LIST (Cont)

REF DESIG	NOTES	NAME AND DESCRIPTION	FIG. NO.
R5		Not Used	
R6		Resistor, Fixed, Composition, 1K, ±10%, 1/4W: MIL Type RC07GF102K	
R7 to R11		Not Used	
R12, R13		Resistor, Fixed, Composition, 560 ohms, ±10%, 1/4W: MIL Type RC07GF561K	
R14		Not Used	
R15		Resistor, Fixed, Composition, 1K, ±10%, 1/4W: MIL Type RC07GF102K	
R16 to R20		Not Used	
R21		Resistor, Fixed, Composition, 10 ohms, ±10%, 1/4W: MIL Type RC07GF100K	
R22		Not Used	
R23		Resistor, Fixed, Composition, 10K, ±10%, 1/4W: MIL Type RC07GF103K	
R24		Resistor, Fixed, Composition, 1K, ±10%, 1/4W: MIL Type RC07GF102K	
R25		Not Used	
R26, R27		Resistor, Fixed, Composition, 1K, ±10%, 1/4W: MIL Type RC07GF102K	
R28		Resistor, Fixed, Composition, 10K, ±10%, 1/4W: MIL Type RC07GF103K	
R29		Resistor, Fixed, Composition, 12K, ±10%, 1/4W: MIL Type RC07GF123K	
R30		Resistor, Fixed, Composition, 1K, ±10%, 1/4W: MIL Type RC07GF102K	
R31		Resistor, Fixed, Composition, 68 ohms, ±10%, 1/4W: MIL Type RC07GF680K	
R32		Resistor, Variable, 100 ohms: MFR 35009, PN 156-4-100	
R33		Resistor, Fixed, Composition, 68 ohms, ±10%, 1/4W: MIL Type RC07GF680K	
R34, R35		Not Used	
R36		Resistor, Fixed, Composition, 1K, ±10%, 1/4W: MIL Type RC07GF102K	

TABLE 1. PARTS LIST (Cont)

REF DESIG	NOTES	NAME AND DESCRIPTION	FIG. NO.
R37		Resistor, Fixed, Composition, 10K, ±10%, 1/4W: MIL Type RC07GF103K	
R38		Resistor, Fixed, Composition, 12K, ±10%, 1/4W: MIL Type RC07GF123K	
R39		Resistor, Fixed, Composition, 1K, ±10%, 1/4W: MIL Type RC07GF102K	
R40		Resistor, Fixed, Composition, 68 ohms, ±10%, 1/4W: MIL Type RC07GF680K	
R41		Resistor, Variable, 100 ohms: MFR 35009, PN 156-4-100	
R42		Resistor, Fixed, Composition, 68 ohms, ±10%, 1/4W: MIL Type RC07GF680K	
R43		Resistor, Fixed, Composition, 100 ohms, ±10%, 1/4W: MIL Type RC07GF101K	
R44		Resistor, Fixed, Composition, 3.3K, ±10%, 1/4W: MIL Type RC07GF332K	
R45		Resistor, Fixed, Composition, 100 ohms, ±10%, 1/4W: MIL Type RC07GF101K	

REF DESIG	NOTES	NAME AND DESCRIPTION	FIG. NO.
R46		Resistor, Fixed, Composition, 3.3K, ±10%, 1/4W: MIL Type RC07GF332K	
R47, R48		Resistor, Fixed, Composition, 470 ohms, ±10%, 1/4W: MIL Type RC07GF471K	
T1 to T4		Transformer, Balanced: MFR 14304, PN 0759-5110-2	
XY1 to XY4		Socket, Crystal: MFR 91506, PN 8000-AG10-1	
Y1, Y2		Crystal, 1.756270 MHz: MIL Type CR19A/U-1.756270 MHz	
Y3, Y4		Crystal, 1.743730 MHz: MIL Type CR19A/U-1.743730 MHz	
Z1, Z2		Integrated Circuit: MFR 01295, PN SN74L90	
Z3		Integrated Circuit: MFR 14304 1976-4330	
Z4, Z5		Integrated Circuit: MFR 02735, PN CA3028A	
Z6		Integrated Circuit: MFR 01295, PN SN7472N	

TABLE 2. INDEX OF MANUFACTURERS' CODES

MFR CODE	NAME AND ADDRESS
01295	Texas Instruments, Inc. Semiconductor Group P.O. Box 5012 13500 N. Central Expressway Dallas, Texas 75222
02735	RCA Corp. Solid State Division Route 202 Somerville, New Jersey 08876
04713	Motorola Inc. Semiconductor Products Division 5005 East McDowell Road Phoenix, Arizona 85036
12954	Dickson Electronics Corporation 8700 East Thomas Road P.O. Box 1390 Scottsdale, Arizona 85352
14304	Harris Corporation RF Communications Division 1680 University Avenue Rochester, New York 14610
35009	IRC Division of Renfrew Electric Co., Ltd 349 Carlaw Avenue Toronto, Ontario Canada M4M 2T2
72982	Erie Technological Products, Inc. 644 West 12th street Erie, Pennsylvania 16512
81312	Winchester Electronics Division Litton Industries, Inc. Main Street and Hillside Avenue Oakville, Connecticut 06779
83125	Nytronics/Darlington Inc. Capacitor Div. Darlington, South Carolina 29532
91506	Augat Inc. 33 Perry Avenue Atteboro, Maryland 02703

TABLE 2. INDEX OF MANUFACTURERS' CODES (Cont)

MFR CODE	NAME AND ADDRESS
93125	General Electric Co. Industry Control Dept. of Switchgear and Control Div. of Apparatus Group Schenectady, New York
99800	American Precision Industries, Inc. Delevan Division 270 Quaker Road East Aurora, New York 14052

NOTES:

1. Unless otherwise specified:
   A. All Resistors are in ohms, 1/4W, ±10%.
   B. All Capacitors are in Microfarads.
   C. All Inductors are in Microhenries.
2. Partial reference designations are shown: Prefix with A2A13 and subassembly prefix if any.
3. Voltages shown were measured in a typical module.

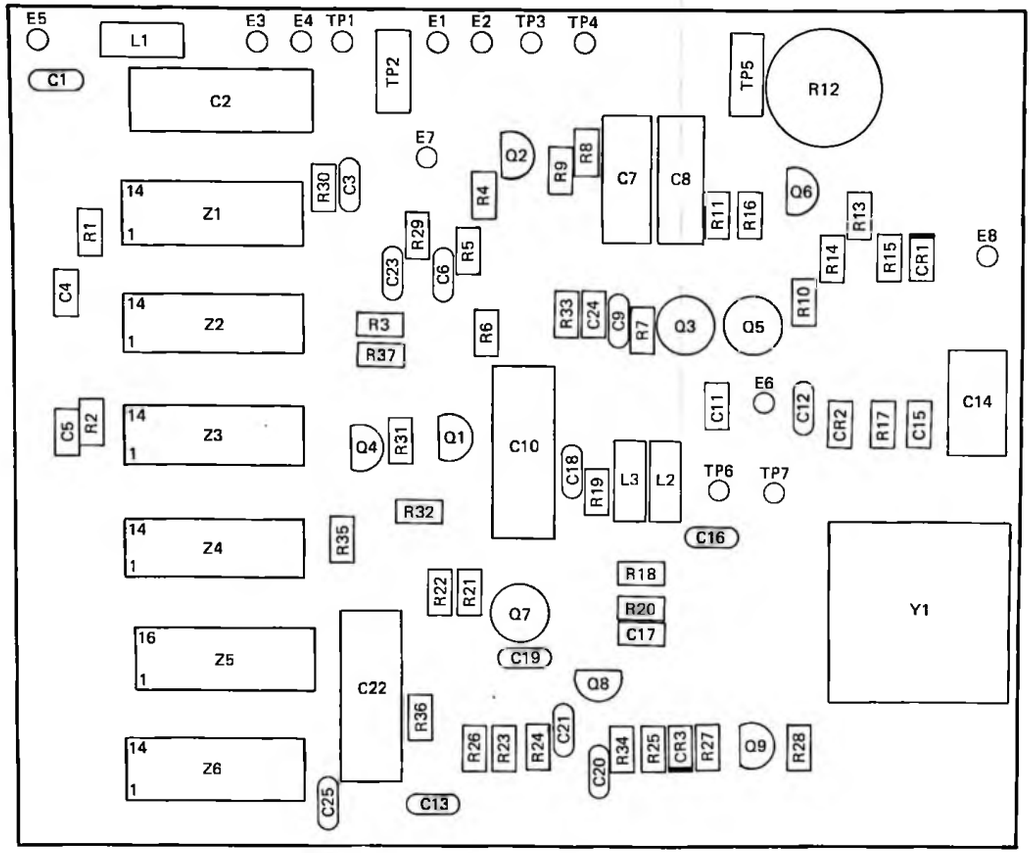

Figure 3. Offset Generator PWB, Component Locations

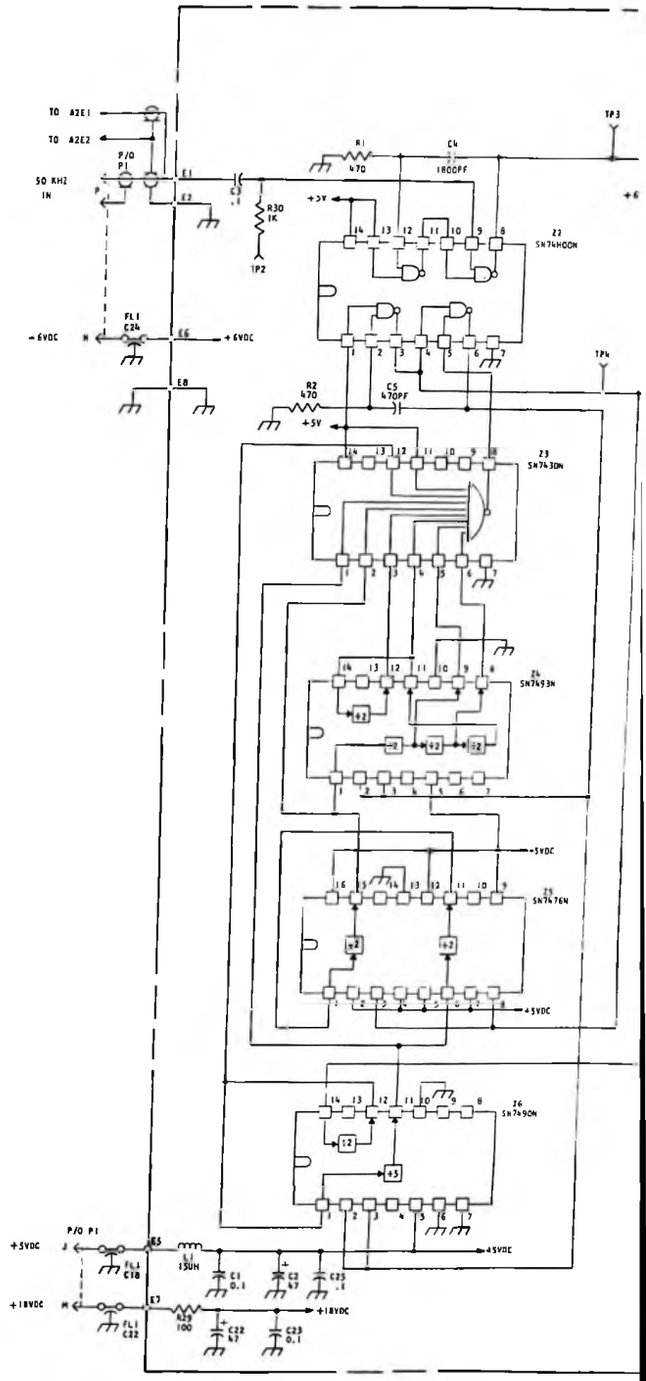

ith A2A13 and subassembly

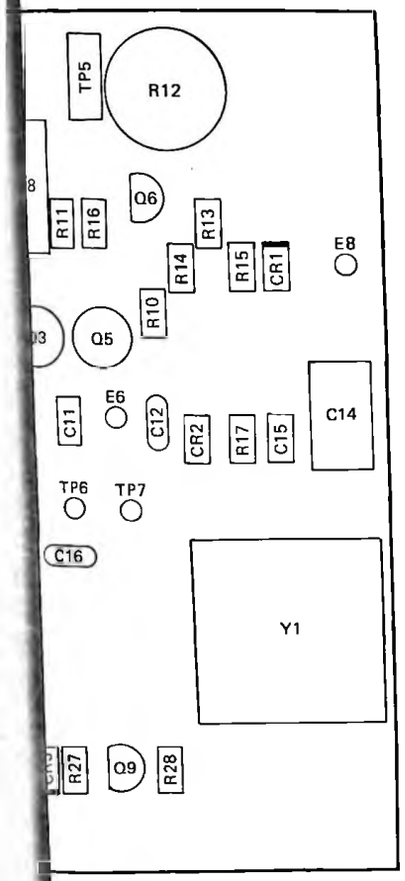

ent Locations

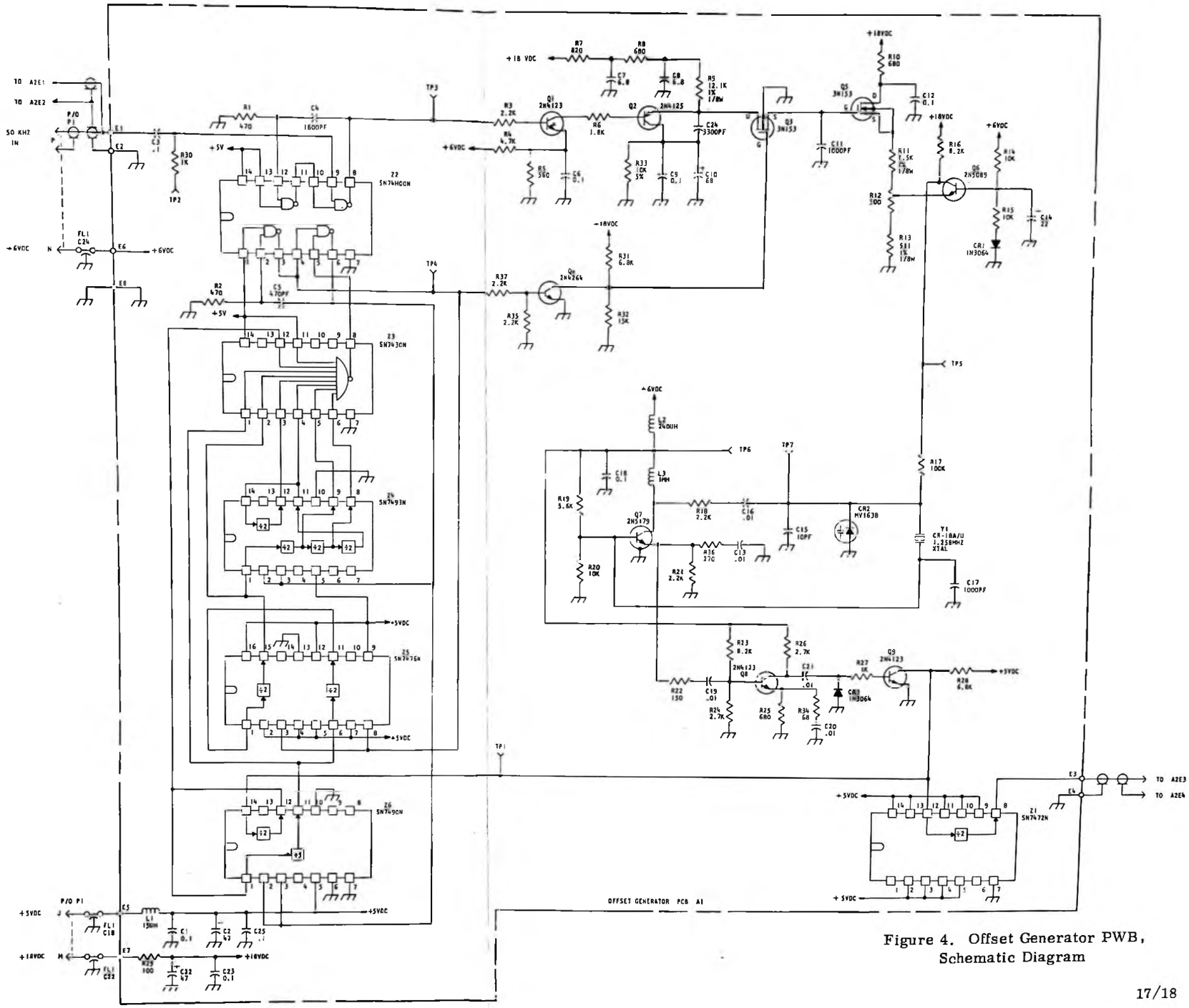

Figure 4. Offset Generator PWB, Schematic Diagram

NOTES:

1. Unless otherwise specified:
   A. All Resistors are in ohms, 1/4W, ±10%.
   B. All Capacitors are in Microfarads.
   C. All Inductors are in Microhenries.
2. Partial reference designations are shown: Prefix with A2A13 and subassembly prefix if any.
3. For 6250 Hz offset frequency, jumper A2E16 and A2E18 together. For 6290 Hz offset frequency, jumper A2E16 and A2E17 together.
4. Voltages shown were measured in a typical module.
5. Subcarrier enable Voltage: ON >1.0 Vdc, OFF ≤0 Vdc.

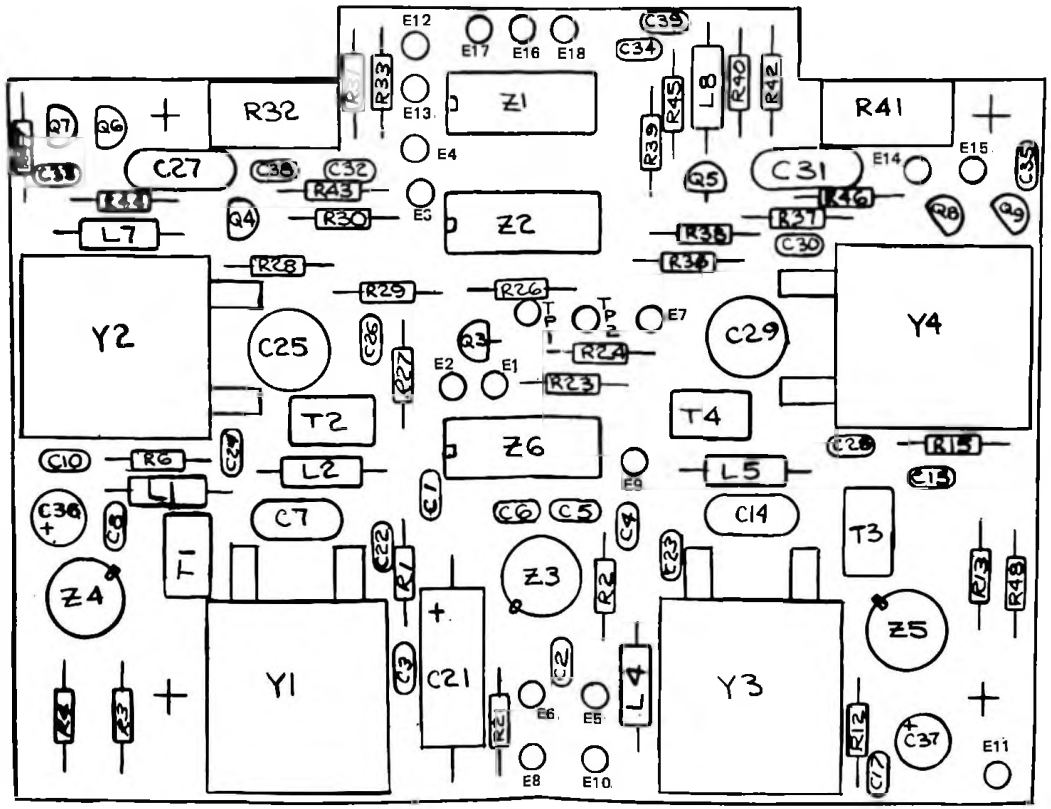

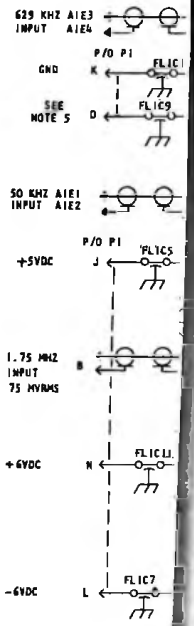

Figure 5. Subcarrier Generator PWB, Component Locations

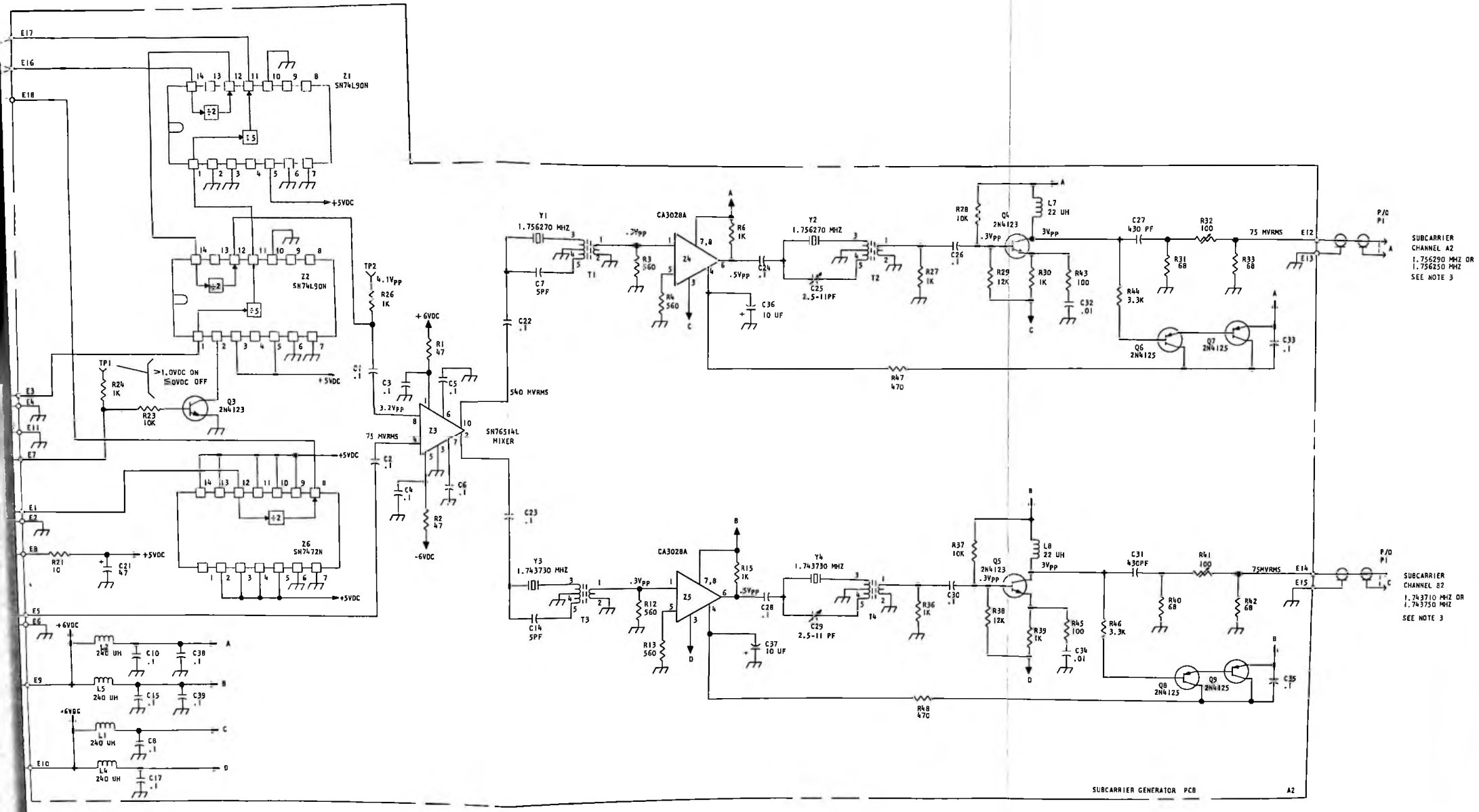

Figure 6. Subcarrier Generator PWB Schematic Diagram

A2A14

UNIT INSTRUCTIONS

LOW BAND PLL ASSEMBLY

A2A14

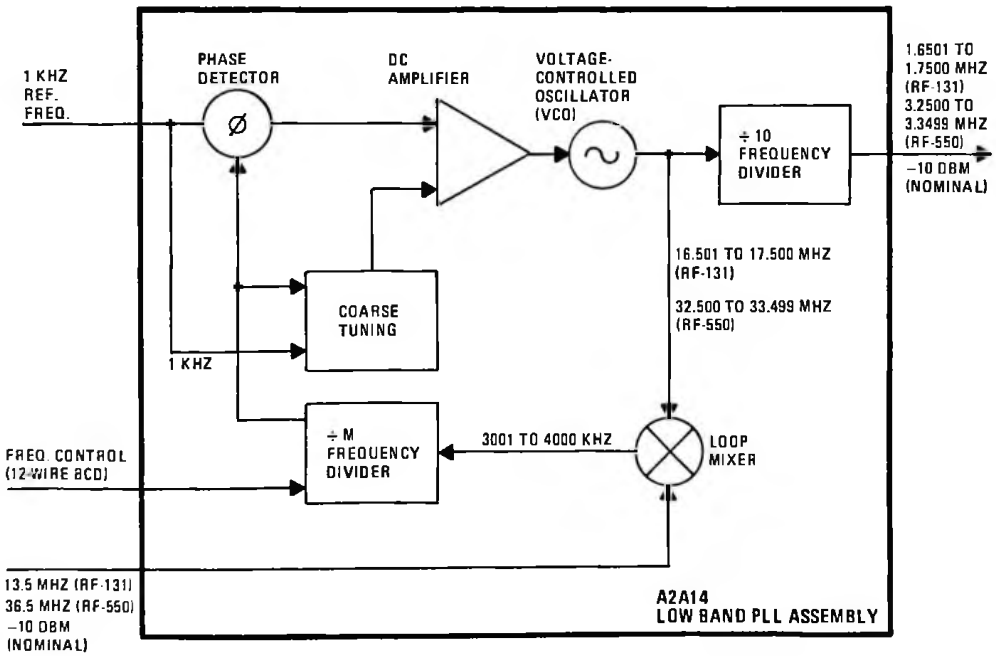

TABLE OF CONTENTS
A2A14

Paragraph		Page
1	General Description	1
2	Technical Characteristics	1
3	Semiconductor Complement	1
4	Overall Circuit Description	1
5	Detailed Descriptions of ÷ M PWB A2A14A1 Circuits	2
5.1	Mixer Operation	2
5.2	Phase Detector Operation	4
5.3	Unlock Detector Course Tune Generator Operation	4
6	Detailed Description of RF PWB A2A14A2 Circuits	5
6.1	VCO Operation	5
6.2	Output Scaling Counter Operation	6
7	Low Band PLL Module A2A14 Frequency Output	6
8	Adjustment/Alignment Data	6
9	Maintenance Parts List	7

Figure		Page
1	Simple Phase Locked Loop	3
2	Block Diagram, Low Band PLL	3
3	Phase Detector Timing Diagram	5
4	Ramp Waveshapes at A2A14A1TP1 Properly Adjusted Module	7
5	Plate Assembly A2A14A3, P/N 1928-4245 Component Locations	8
6	Module Chassis Connector A2J14 Top View	8
7	Low Band PLL Module ÷ M PWB Component Location	13
8	Low Band PLL Module ÷ M PWB A2A14A1 Schematic Diagram	15
9	Low Band PLL Module RF PWB Component Location	17
10	Low Band PLL Module RF PWB A2A14A1 Schematic Diagram	19

Table		Page
1	Semiconductor Complement	1
2	Decade Divider Circuit Input/Output Data	4
3	Maintenance Parts List A2A14 Low Band PLL	9

1. GENERAL DESCRIPTION

The Low Band Phase Lock Loop (PLL) Module A2A14 is an electrically-tuned frequency synthesizer compatible with both the RF-550 Receiver and the RF-131 Exciter. Refer to the RF PWB Schematic diagram for the strapping changes required to effect interchangeability. The Low Band PLL A2A14, responds to BCD information from the control group to provide 100Hz, 1KHz, and 10KHz control capability. When the module is used with the RF-550, the output Frequency is adjustable in 100Hz steps from 3.25 to 3.3499 MHz. When used in the RF-131, the output is also adjustable in 100Hz steps, however, due to the strapping changes the output range is 1.6501 to 1.7500 MHz. The selected output frequency is phase locked to a reference frequency standard. Low Band PLL module A2A14 contains two major PWB assemblies; ÷M PWB A2A14A1 and RF PWB A2A14A2.

NOTE

In some instances, the integrated circuit part numbers listed herin may differ from those of the equipment supplied. In all instances these parts are the equivalent or better and may be used interchangeably.

2. TECHNICAL CHARACTERIATICS

Weight
- 1.0 Pound (450 grams)

Dimensions:
- 4-1/8 in. (H) x 2-1/8 in. (W) x 5-7/8 in. (D)
- 10.5 cm (H) x 5.4 cm (W) x 14.9 cm (D)

Power Requirements:
- +18Vdc at 45mA (RF-131)
- +15Vdc at 45mA (RF-550)
- + 5Vdc at 95mA
- + 5Vdc at 306mA (RF-550)
- + 6Vdc at 211mA
- − 6Vdc at 4.5mA

Signal Inputs:
- 13.5MHz fixed at 70mV_{RMS} (RF-131)
- 36.5MHz at 70mV_{RMS} (±1KHz with VFO) (RF-550)
- 1kHz fixed at 2V P-P Min. (4V P-P Typical)
- 12 wires, Binary-Coded-Decimal (BCD) Frequency Control

Signal Outputs:
- 1.6501 to 1.7500MHz (RF-131)
- 3.25 to 3.349MHz (RF 550)

Input Impedance:
- 13.5MHz: 50 ohms
- 1kHz: 1K ohm

Output Load:
- 50 ohms

3. SEMICONDUCTOR COMPLEMENT

Table 1 lists all semiconductors used in the Low Band PLL Module, A2A14.

Table 1. SEMICONDUCTOR COMPLEMENT

Reference Designation	Type	Function
A1CR1	1N3064	Bias Diode
Q1	2N2222	Amplifier
Q2	2N5179	Switch
Q3	2N2907	Ramp Generator
Q4	2N2222	Ramp Discharge Switch
Q5	2N2222	Sample Pulse Switch
Q6	3N171	Sampling FET
Q7	1976-4424	Source Follower
Q8	2N2222	Amplifier
U1	0759-5150	Mixer
U2	SN74LS160AN	÷10 Integrated Circuit
U3	SN74LS160AN	÷10 Integrated Circuit
U4	SN74LS160AN	÷10 Integrated Circuit
U5	SN74LS160AN	÷10 Integrated Circuit
U6	SN74LS11N	Triple three-input AND Gate
U7	SN74LS00N	Quad two-input NAND Gate
U9	SN74S112NN	Freq. Discriminator Flip-Flop
U10	SN74LS112N	Coarse Tune Flip-Flop
U11	SN74121N	One shot
AR1	8007C	Op Amp
A2CR1	DKV6520B	Voltage Variable Capacitor
Q1	2N5179	Amplifier
Q3	2N5397	FET Oscillator
Q4	2N5179	Buffer Amplifier
U2	SN74S11N	Triple three-input AND Gate
U3	SN74S112AN	÷10 Counter
U4	SN74S112AN	÷10 Counter
U5	UA7812KC	12 Volt Regulator

4. OVERALL CIRCUIT DESCRIPTION

The two basic elements of an elementary phase locked loop frequency synthesizer are a voltage controlled oscillator (VCO) and a phase detector.

The phase detector is a device which yields a Dc output voltage proportional to the phase difference between two input signals. If the inputs to the phase detector are a reference frequency and the VCO Output Frequency and if the phase detector output controls the VCO, then a phase-locked loop is formed in which the phase detector will drive the VCO frequency to equal the Reference Frequency. This is due to the fact that the only stable condition of the loop is when the output of the phase detector is pure Dc, with no Ac component present. This can occur only when the two inputs to the phase detector have the same frequency.

In addition, a phase-locked loop may include a frequency divider in the feedback loop to obtain multiples of the reference frequency from the VCO. Figure 1 shows a simple phase-locked loop with a frequency divider. One input frequency to the phase detector is a stable reference, the other is the divider output. The loop works by forcing the two frequencies to be exactly equal. It does this by electrically tuning the VCO. When the VCO is tuned to the frequency at which $f_o \div M = F_R$, the loop is said to be locked. For example, in the RF-131, assume that the VCO is electrically tunable in the vicinity of 1.7000kHz, that the reference frequency is 1kHz, and that the ÷M ratio is 17000. The feedback of the loop will force the VCO frequency to exactly $f_o = (M)$ (1kHz) = 17000kHz. Other frequencies are synthesized simply by changing the division ration of the ÷M. For example:

÷M	Output Frequency*
17002	17002 kHz
17001	17001 kHz
17000	17000 kHz
16999	16999 kHz
16998	16998 kHz

*These numbers apply only to the simplified circuit of Figure 1, not the actual module.

The loop actually used in the Low Band PLL Module A2A14 is similar to the example just given. The addition of a loop mixer (Figure 2) however, reduces the speed requirements of the frequency divider without affecting the principle of operation. A fixed divide-by-ten circuit, following the VCO, scales the VCO frequency down to the desired output range.

In the RF-131 for example, the VCO output frequency to the divider is then 16.501 to 17.500MHz which becomes 3001 to 4000kHz at the output of the loop mixer. This is accomplished by mixing the VCO output with 13.5MHz. It then becomes 1kHz when divided by the frequency divider (÷M) by a ratio between 3001 to 4000.

When used in the RF-550, the VCO output frequency to the divider is 32.5 MHz to 33.49 MHz which becomes 3001 to 4000KHz at the mixer output. This is accomplished by mixing the VCO output with 36.5 MHz. It then becomes 1KHz when divided by the Frequency divider (÷MPWB) by a ratio between 3001 to 4000.

5. DETAILED DESCRIPTION OF ÷M PWB A2A14A1 CIRCUITS

÷M PWB A2A14A1 contains five basic elements of Low Band PLL Module A2A14. These are the loop mixer, ÷M digital counter, sample and hold phase detector, unlock detector, and coarse tune generator.

5.1 Mixer Operation

The loop mixer translates a high frequency from the VCO to a more suitable frequency for the ÷M counter, as described in paragraph 4. The frequencies are 16.501 to 17.50MHz and a reference of 13.5MHz in the RF-131 (32.500 to 33.499 MHz and a reference of 36.5 MHz in the RF-550). The difference of these frequencies lies in 3.00MHz to 4.00MHz region. A low pass filter (C12, L5 and C13) is used after the mixer and amplifier Q1 to provide the necessary drive level to the ÷M frequency divider.

mable decade counters and a fixed ÷4 counter, and has the capability of dividing an applied input signal by any whole number between 3001 and 4000. The status of the counter after a number of clock pulses is shown in Table 2.

Refering to Table 2. The Carry Output column is simply a flag to indicate when the counter has reached a nine (or full) state. It therefore requires ten clock pulses to the input of the counter to achieve one carry output pulse. If the carry line is used as a switch to allow a second counter to operate, the second counter will count only one pulse for every ten pulses into the first counter. Thus, with two decade counters, a divide-by-one hundred frequency division is achieved.

Preloading advances the counter to a given state so that fewer input pulses are needed to achieve the full, or carry state. For example: If the counter is preloaded to the decimal six and then clocked with input pulses, it will count seven, eight, nine, zero and thus achieve a carry in only four input pulses. If the counter is reset to decimal six instead of zero on the next clock pulse after the carry, the device becomes a divide-by-four instead of a divide-by-ten counter. In U2, U3, U4, U5 decade dividers, a load command (low on pin 9) causes preloading to occur on the next clock pulse rather than normal counting. Thus the operation described above (using the divider as a divide-by-four) can be achieved by permanently wiring the data input terminals for a binary six (0110), and connecting the carry output to the load input.

U2, U3, U4 and U5 comprise the ÷M counter (See Figure 6). U2, U3, U4 and U5 are preloaded by 12 data input frequency control lines carrying binary-coded-decimal information. The final counter, U5 is permanently wired with decimal six at U5-3 and U5-6, and functions as a divide-by-four counter. If

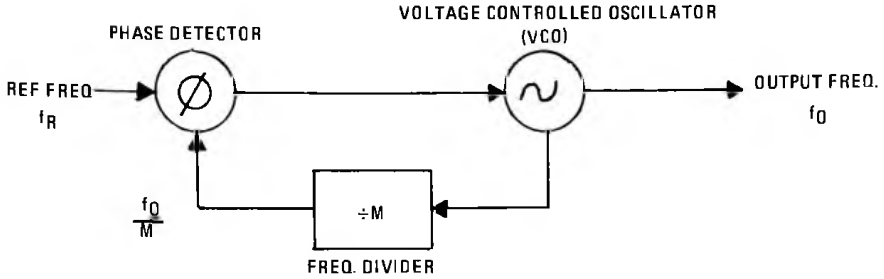

Figure 1. Simple Phase Locked Loop

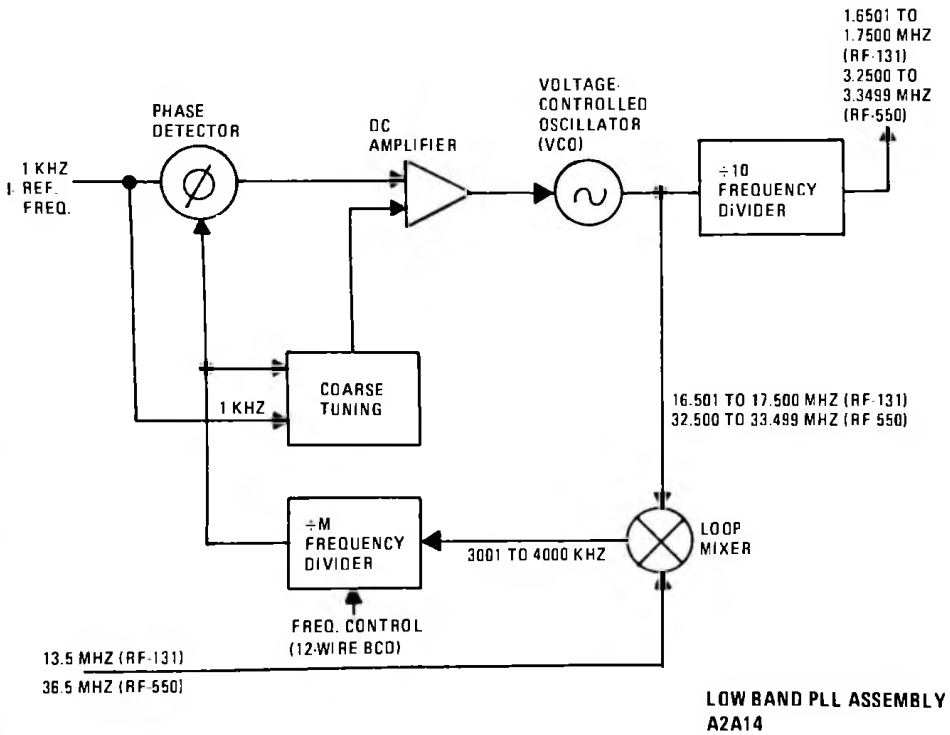

Figure 2. Block Diagram, Low Band PLL

the counter is started at 6000, it counts three divide-by-tens and the fixed divide-by-four yielding a total of 4000. If however, the counter is loaded with 6999, it counts from 6999 to 10.000 for a total count (division ratio) of 3001.

TABLE 2. DECADE DIVIDER CIRCUIT INPUT/OUTPUT DATA

Clock Input Pulses	Counter State	Q_A	Q_B	Q_C	Q_D	Carry Output
0	0	0	0	0	0	0
1	1	1	0	0	0	0
2	2	0	1	0	0	0
3	3	1	1	0	0	0
4	4	0	0	1	0	0
5	5	1	0	1	0	0
6	6	0	1	1	0	0
7	7	1	1	1	0	0
8	8	0	0	0	1	0
9	9	1	0	0	1	1
10	0	0	0	0	0	0
11	1	1	0	0	0	0
12	2	0	1	0	0	0
13	3	1	1	0	0	0

The counters are cascaded at the enable inputs of the U2 through U5. The counters are synchronously clocked and require a "1" level at pin ten (enable input). The carry output from the previous counter provides the high "1" necessary to count. Therefore U2 counts continuously, while U3 counts when it receives a carry input from U2, and likewise with U4 and U5. AND gates U6A, U6B and NAND gate U7A, detect a full condition of each of the counters and drives the load inputs low. A low level on a load input forces the counter to the state defined by the levels on the ABCD inputs (pins 3-6), at the next clock pulse regardless of the counter's present state.

5.2 Phase Detector Operation

The phase detector consists of ramp generator Q3, R13, and C22, sampling FET Q6 and hold capacitor C23. The phase detector receives two inputs; a reference signal consisting of narrow pulses at a rate of 1kHz, and a sample signal consisting of short pulses at a rate determined by the VCO frequency and the divider ratio. By referring to the timing diagram (Figure 3), the operation of the phase detector can be understood.

If the loop is locked, both reference and sample pulses to the phase detector will be 1kHz, and should occur in alternating sequence as shown.

The difference between the pulses represents the phase error from the phase detector output.

Flip-flop U9A (Figure 6) is set on the negative edge of the 1kHz reference pulse causing switch Q2 to enable a ramp to be generated by charging C22 through Q3. When a sample pulse arrives from the ÷M output (U7B), flip-flop U9A is cleared, causing switch Q2 to stop the ramp at whatever voltage is on C22 at that time. At the same instant, the sample pulse enables switch Q5 and Q6 which transfer the voltage on C22 to C23. Since C22 is twice the value of C23 the voltage on C22 will change only slightly while C23 will increase or decrease to achieve the same level as C22.

Ramp capacitor C22 is discharged by switch Q4 on the next positive reference pulse and the cycle is complete. Source follower Q7 provides a high impedance load to storage capacitor C23, so that it won't discharge between sample pulses. When the loop is locked, the voltage on capacitor C23 remains almost constant, changing only by the amount necessary to correct for VCO frequency changes. The loop thus constantly compensates to maintain the correct output frequency phase locked to the reference standard.

5.3 Unlock Detector Course Tune Generator Operation

The unlock detector utilizes a frequency discriminator comprising flip-flops U9 and U10, and NAND gates U7C and U7D. Flip-flop U9A is clocked by reference pulses from U11-6 and cleared by sample pulses from the divider output at U7B-6. Flip-flop U9B is clocked by sample pulses from the divider output at U6B-6 and cleared by reference pulses from U11D-1. When the loop is locked, the flip-flops are cleared after each set (clock) pulse. This ensures the output of NAND gates U7C and U7D always are high since each input goes low before the other goes high.

If, however, the divider output frequency is higher, for example, sample pulses will occur faster than reference pulses. It now becomes possible for NAND gate U7D to "see" sample pulses while flip-flop U9B is in the set (high "1") state. This causes negative going pulses at U7D-3 which clock Flip-Flop U10-A. When flip-flop U10-A is set, its

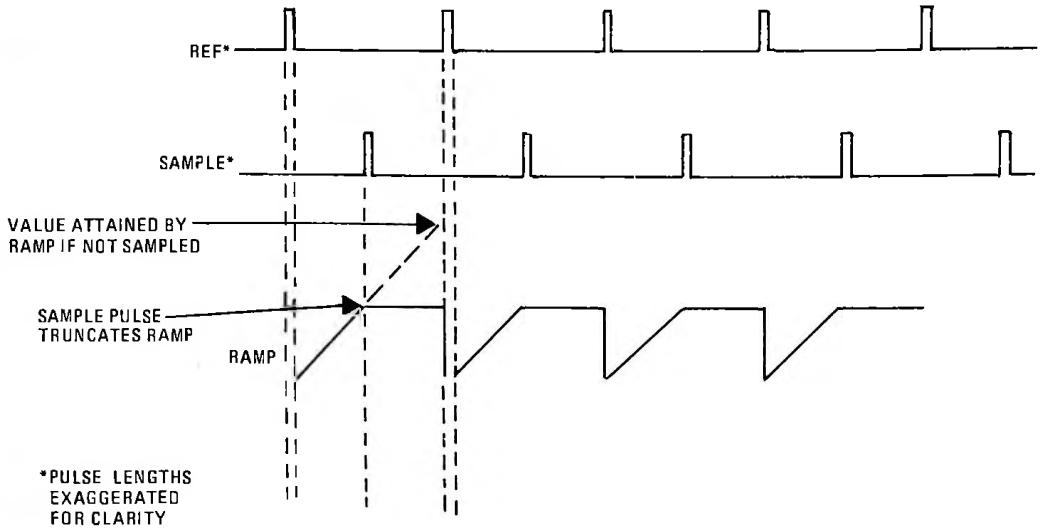

Figure 3. Phase Detector Timing Diagram

high output signal becomes the coarse tune output at A1E19 and is fed to the VCO as coarse tune information. Flip-flop U9A will receive more clear pulses than clock pulses and ensure a high state at NAND gate U7C-11.

If, the divider output should shift lower in frequency, it becomes possible for NAND gate U7C to "see" reference pulses while flip-flop U9A is in the set state. This causes negative pulses at U7C-11 which clear flip-flop U10A. NAND gate U7D is high, since flip-flop U9B is cleared more than clocked and thus will not receive a clock pulse while in the set state. The low output from flip-flop U10A becomes the coarse tune output at A2A14 A1E19.

6. DETAILED DESCRIPTION OF RF PWB A2A14A2 CIRCUITS

RF PWB A2A14A2 contains the voltage controlled oscillator loop amplifier, final output scaling divide-by-ten counter, and a 12 Volt Dc supply for the module.

6.1 VCO Operation

See Figure 8. The Dc output from the phase detector of the ÷M PWB A2A14A1 is fed through Dc amplifier AR1. The coarse tune signal is also fed to Dc amplifier AR1 and causes either a positive or negative swing from AR1-6 when the coarse tune signal changes state during an unlocked condition. A change in state of the coarse tune circuitry of ÷M PWB causes a voltage swing at AR1-3. In the locked state, the coarse tune signal remains constant and the output from AR1-6 is controlled by the phase error voltage input. R3, R4 and C5 shape AR1's frequency response to stabilize the loop.

The oscillator itself uses Q3 in common gate configuration. The oscillator frequency is determined principally by a combination of C18, L7, C37 and CR1. Positive feedback and output coupling for the oscillator is provided by capacitive voltage divider C25 and C20. Nominal frequency range is determined by L7 and its associated capacitors, while C18 provides a mechanical frequency adjustment. Electrical tuning is by means of voltage variable capacitor CR1.

VCO output is amplified by Q1 and fed back to the loop mixer of ÷M PWB where it is processed to produce a Dc phase detector output to control the oscillator frequency. The VCO output is also fed through buffer amplifier Q4, which feeds a fixed divide-by-ten counter, scaling the VCO output frequency of 1.6501 and 1.75000MHz in the RF-131 (32.500 to 33.499 in the RF-550).

6.2 Output Scaling Counter Operation

The final divide-by-ten circuitry (U2, U3 and U4) receives the frequencies (16.501 to 17.500MHz for the RF-131, 32.500 to 33.499 MHz for the RF-550) in 1KHz steps, which appear as 100Hz steps at the module output. For example, in the RF-131 if the final divide-by-ten circuitry receives 16.600 MHz, the output will be (16.600 MHz ÷ 10), or 1.6600MHz. If the VCO now shifts 1KHz in the positive direction, the divide-by-ten circuitry will receive 16.601MHz, and the module output becomes 1.6601 MHz (16.601MHz ÷ 10), for an increment of 100Hz. In the RF-550 for example, assume the final divide-by-ten circuitry receives 33.300 MHz, the output will be 33,300 ÷ 10 for a frequency of 3.3300. With a VCO shift of 1KHz in the positive direction, the divide-by-ten circuitry receives 33.301 MHz which is seen as 3.3301 MHz (33.301 MHz ÷ 10) at the module output, again an increment of 100Hz. Potentiometer R2 allows for output level adjustment, and a Lowpass Filter is used to convert the divider TTL output to a sinusoidal form at A2A14A2E9.

Terminals A2E13 and A2E14 are connected together. The cathode end of CR1 is tied to 12Vdc through R35 and R18, and its anode voltage is controlled through amplifier AR1. The loop operation can best be explained through an example. If the VCO tries to shift higher in frequency, the output of the loop mixer will also shift higher because the VCO input to the mixer is higher than the reference input. This increases the sample rate to the phase detector, lowering the phase error voltage. The phase error voltage is fed to the inverting terminal of AR1. A decreasing phase error voltage raises the output level of AR1 and the voltage level of the anode of CR1. This decreases the voltage across CR1, increasing its capacitance and lowering the VCO frequency, thus completing a negative feedback loop. Should the ÷M ratio change, the exact same sequence occurs except the VCO is forced to a new frequency. Thus the phase detector output once again has no Ac component.

The module uses its own + 12Vdc supply obtained by 12V regulator U5 from the + 18Vdc input at A2A14P1-M.

7. LOW BAND PLL MODULE A2A14 FREQUENCY OUTPUT

The frequency of the module output will be:

$f_o = 1750.0kHz - 0.1kHz \times$ last 3 digit switches. (RF-131)

$f_o = 3250.0kHz + 0.1kHz \times$ last 3 digit switches. (RF-550)

For example: The Frequency Selector Digit switches read:

0	2	1	5	6	3

Therefore $f_o = 1750.0kHz - 0.1kHz \times 563$
$= 1750.0kHz - 56.3kHz$
$= 1693.7kHz$ (RF-131)

$f_o = 3250.0kHz - 0.1KHz \times 563$
$= 3250.0KHz - 56.3KHz$
$= 3306.3KHz$ (RF-550)

8. ADJUSTMENT/ALIGNMENT DATA

Adjustment of Low Band PLL Module A2A14 will be required if the VCO does not lock on frequency within one-half second, from resetting one of the last three frequency selector digit switches, or if the module jumps in and out of lock. By measuring the voltage at A2A14A2TP1, the Dc voltage will decrease in incremental steps from approximately 6.6 Vdc in the RF-131 (8.2Vdc in the RF550), at the XXX999 switch setting, to approximately 1.0Vdc in the RF-131 (4.0Vdc RF-550) at XXX000 setting. Lock is indicated by a steady frequency at the module output, and ramps which truncate at the same Dc level at A2A14A1TP1, as shown in figure 4.

Test equipment required is Tektronix Model 453 Oscilloscope, or equivalent, with a 10X probe for reduced circuit loading, an RF Milivoltmeter, alignment tool (JFD No. 5284, or equivalent); and a small screwdriver.

8.1 Alignment Procedure

a. Set frequency selector digit switches at "000" and connect an oscilloscope to A2A14A1TP1. Adjust the oscilloscope to read approximately 1ms per division - horizontal and 1 Volt per division - vertical.

b. Adjust A2A14A2R1 and/or A2A14A2C18 so that all successive ramps at A2A14A1TP1 truncate at the same Dc level. This indicates that the loop is locked.

c. Disconnect the oscilloscope at A2A14A1TP1 and connect it to A2A14A2TP1.

d. Adjust A2A14A2C18 so that the voltage at A2-A14A2TP1 equals + 1 Volt (RF-131) or 4 Volts (RF-550) and the loop remains locked.

e. Disconnect the oscilloscope at A2A14A2TP1 and connect it to A2A14A1TP1.

NOTE

When the loop is locked, all ramps truncate at the same level. However, the loop must be

able to lock at two different levels, high and low, as shown in Figure 4.

f. Adjust A2A14A2R1 so that high state lock conforms to that shown in Detail A of Figure 4 and low state lock conforms to that shown in Detail B.

NOTE

High or low state lock can be obained by switching the 10kHz switch back and forth between 9 and 0. It does not matter whether high or low state lock occurs at any particular frequency, in fact, a frequency may lock high one time and low another.

g. In the RF-131 adjust A2A14A2R2 to yield $89mV_{RMS}$ at the 18.3 ± 0.05MHz output of the Special Frequencies Module A2A10A2E5. For the RF-550 measure the level at A2A14A2-E9 and adjust A2A14A2R2 for 70mV.

9. MAINTENANCE PARTS LIST

Table 3 lists the electronic parts for Low Band PLL Module A2A14, PN 1976-4400. Manufacturers are referenced by a five-digit code. For a complete list of manufacturers' codes and addresses, refer to the General Information Section.

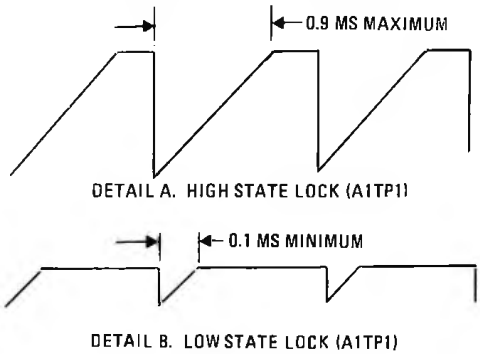

Figure 4. Ramp Waveshapes at A2A14A1TP1-Properly Adjusted Module

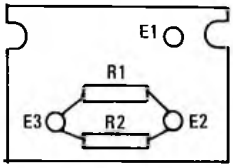

NOTE: RESISTORS A2A14R1 AND A2A14R2 ARE ASSEMBLED TO PLATE ASSEMBLY A2A14A3.

Figure 5. Plate Assembly A2A14A3, PN 1928-4245 Component Locations

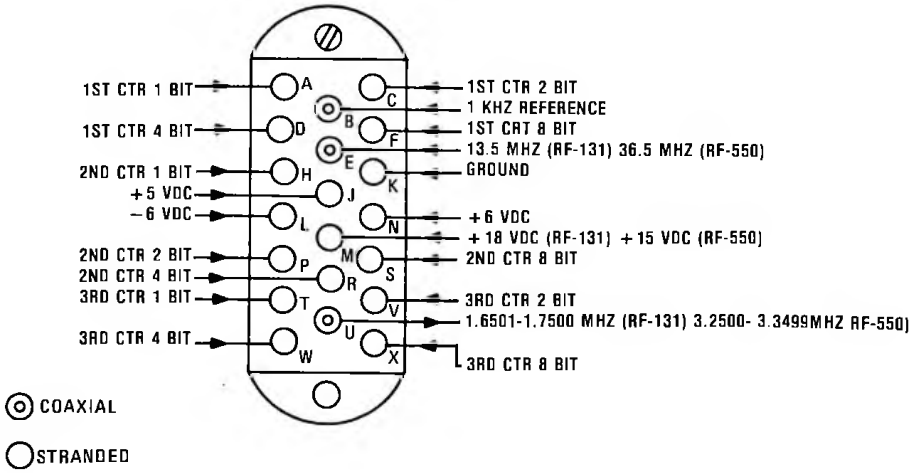

Figure 6. Module Chassis Connector A2J14 Top View

Table 3. MAINTENANCE PARTS LIST-A2A14 Low Band PLL

Reference Designation	Name and Description
A2A14	Low Band Phase-Locked Loop Module: MFR 14304, PN 1976-4400
P1	Connector, Module: MFR 81312, PN MRAC20PN
	Pins, Connector, Coaxial, Male: MFR 81312, PN 100-80005
	Pins, Connector, Straight, Male: Mil type MS17803-16-20
R1, R2	Resistor, Fixed Composition, 10 Ω ± 10%, ¼W: Mil type RC07GF100J
A2A14A1	÷M: PWB Assembly, Low Band PLL MFR 14304, PN 6783-4410
C1-C4	Capacitor, Fixed Ceramic, 0.1 uF: MFR 14304, PN C11-0005-104
C9-C11	Same as A1C1
C12, C13	Capacitor, Fixed Ceramic, 0.001 uF: MFR 14304, PN C11-0005-102
C14, C15	Capacitor, Fixed Ceramic, 0.1 uF: MFR 14304, PN C11-0005-104
C16	Capacitor, Fixed Ceramic, 240 pF: Mil type CM05FD241J03
C17	Capacitor, Fixed Ceramic, 0.1 uF: MFR 14304, PN C11-0005-104
C18	Capacitor, Fixed Ceramic, 82 uF: MFR 12954, PN D82GS1D15M
C19-C21	Capacitor, Fixed Ceramic, 0.01 uF: MFR 14304, PN C11-0005-103
C22	Capacitor, Fixed Ceramic, 0.1 uF: MFR 14304, PN C11-0005-104
C23	Capacitor, Fixed Ceramic, 0.01 uF: MFR 14304, PN C11-0005-103
C24-C26	Not Used
C27	Capacitor, Fixed Ceramic, 82 uF: MFR 12954, PN D82GS1D15M
C28	Capacitor, Fixed Ceramic, 0.1 uF: MFR 14304, PN C11-0005-104
C29	Not Used
C30	Capacitor, Fixed Ceramic, .47 uF: MFR 14304, PN C-6419
C31	Capacitor, Fixed Ceramic, 0.1 uF: MFR 14304, PN C11-0005-104
C32, C33	Capacitor, Fixed Ceramic, .001 uF: MFR 14304, PN C11-0005-102
CR1	Diode, Mil type 1N3064

Reference Designation	Name and Description
L1, L6	Inductor, 33 uH: MFR 99800, PN1537-51
L2	Inductor, 240 uH: MFR 99800, PN 1537-94
L3, L4	Inductor, 6.8 uH: MFR 99800, PN 1537-32
L5	Inductor, 1.0 uH: MFR 99800, PN 1537-12
Q1	Transistor, NPN: Type 2N2222
Q2	Transistor, NPN: Type 2N5179
Q3	Transistor, PNP: Type 2N2907
Q4, Q5	Transistor, NPN: Type 2N2222
Q6	Transistor, FET: Type 3N171
Q7	Transistor, FET: MFR 14304, PN 1976-4424
Q8	Transistor, NPN: Type 2N2222
R1, R2	Resistor, Fixed Composition, 6.8K ± 10%, ¼W: Mil type RC07GF682J
R3	Resistor, Fixed Composition, 1K ± 10%, ¼W: Mil type RC07GF102J
R4	Resistor, Fixed Composition, 3.9K ± 10%, ¼W: Mil type RC07GF392J
R5	Resistor, Fixed Composition, 560 Ω ± 10%, ¼W: Mil type RC07GF561J
R6	Not Used
R7	Resistor, Fixed Composition, 15 Ω ± 10%, ¼W: Mil type RC07GF150J
R8	Resistor, Fixed Composition, 390 Ω ± 10%, ¼W: Mil type RC07GF391J
R9	Resistor, Fixed Composition, 2.2K ± 10%, ¼W: Mil type RC07GF222J
R10	Resistor, Fixed Composition, 2.7K ± 10%, ¼W: Mil type RC07GF272J
R11	Resistor, Fixed Composition, 1K ± 10%, ¼W: Mil type RC07GF102J
R12	Resistor, Fixed Composition, 2.2K ± 10%, ¼W: Mil type RC07GF222J
R13	Resistor, Fixed Composition, 5.6K ± 10%, ¼W: Mil type RC07GF562J
R14	Resistor, Fixed Composition, 390 Ω ± 10%, ¼W: Mil type RC07GF391J
R15	Resistor, Fixed Composition, 2.2K ± 10%, ¼W: Mil type RC07GF222J
R16	Resistor, Fixed Composition, 390 Ω ± 10%, ¼W: Mil type RC07GF391J

Table 3. MAINTENANCE PARTS LIST-A2A14 Low Band PLL (Cont.)

Reference Designation	Name and Description
R17	Resistor, Fixed Composition, 2.2K ±10%, ¼W: Mil type RC07GF222J
R18, R19	Resistor, Fixed Composition, 10K ±10%, ¼W: Mil type RC07GF103J
R20	Resistor, Fixed Composition, 12K ±10%, ¼W: Mil type RC07GF123J
R21	Resistor, Fixed Composition, 10K ±10%, ¼W: Mil type RC07GF103J
R22-R24	Not Used
R25	Resistor, Fixed Composition, 4.7 Ω ±5%, ¼W: Mil type RC07G4R7J
R26	Resistor, Fixed Composition, 2.2K ±5%, ¼W: Mil type RC07G222J
R27	Resistor, Fixed Composition, 10K ±5%, ¼W: Mil type RC07GF103J
TP1	Jack, Test Point: MFR 14304, J60-0001-008
TP2	Jack, Test Point: MFR 14304, J60-0001-002
U1	Mixer: MFR 14304, PN 0759-5150
U2-U5	Integrated Circuit Counter: MFR 01295, PN SN74LS160AN
U6	Integrated Circuit, AND Gate: MFR 01295, PN SN74LS11N
U7	Integrated Circuit, NAND Gate: MFR 01295, PN SN74LS00N
U9, U10	Integrated Circuit, Flip-Flop: MFR 01295, PN SN74S112N
U11	Integrated Circuit, Multivibrator: MFR 01295, PN SN74121N
A2A14A2	RF: PWB Assembly, Low Band PLL, MFR 14304, PN 1976-4420
AR1	Integrated Circuit, Op Amp: MFR 32293,PN 8007C
C1	Capacitor, Fixed, 82 uF, ± 20%, MFR 12954, PN D82GS1D15M
C2	Capacitor, Fixed, 10 uF: MFR 12954, PN T362C106M035AS
C3	Capacitor, Fixed Ceramic, 0.1 uF, ± 20%: MFR 14304, PN C11-0005-104
C4	Not Used

Reference Designation	Name and Description
C5	Capacitor, Fixed Ceramic, 0.1 uF, ± 20%: MFR 72982, PN 8121-100-X7R-104K
C6	Capacitor, Fixed, 82 uF: MFR 12954, PN D82GS1D15M
C7-C11	Capacitor, Fixed Ceramic, 0.01 uF, ± 20%: MFR 14304, PN C11-0005-103
C12, C13	Capacitor, Fixed Ceramic, 0.1 uF, ± 20%: MFR 14304, PN C11-0005-104
C14, C15	Not Used
C16, C17	Capacitor, Fixed Ceramic, 0.01 uF, ± 20%: MFR 14304, PN C11-0005-103
C18	Capacitor, Variable, 1-10 pF, ± 10%: MFR 73899, PN VAJ605
C19	Capacitor, Fixed Ceramic, 10 pF, ± 10%: Mil type CM05CD100J03
C20	Capacitor, Fixed Ceramic, 22 pF, ± 10%: Mil type CM05ED220J03
C21	Capacitor, Fixed Ceramic, 20 pF, ± 10%: Mil type CM05CD200J03
C22-C24	Not Used
C25	Capacitor, Fixed Ceramic, 5 pF, ± 10%: Mil type CM05CD050D03
C26	Capacitor, Fixed Ceramic, 0.01 uF, ± 20%: MFR 14304, PN C11-0005-103
C27	Capacitor, Fixed Ceramic, 10 uF, ± 20%: MFR 12954, PN T362C106M035AS
C28, C29	Capacitor, Fixed Ceramic, 0.01 uF, ± 20%: MFR 14304, PN C11-0005-103
C30-C32	Not Used
C33	Capacitor, Fixed Ceramic, 1500 pF, ± 10%: Mil type CM06FD152J03
C34	Capacitor, Fixed Ceramic, 2200 pF, ± 10%: Mil type CM06FD222J03

Table 3. MAINTENANCE PARTS LIST-A2A14 Low Band PLL (Cont.)

Reference Designation	Name and Description
C35	Capacitor, Fixed Ceramic, 1500 pF, ± 10%: Mil type CM05Fd152J03
C36	Capacitor, Fixed Ceramic, 0.01 uF, ± 20%: MFR 14304, PN C11-0005-103
C37	Capacitor, Fixed Ceramic, 10 pF, ± 10%: Mil type CM05CD100J03
C38	Capacitor, Fixed Ceramic, 0.1 uF, ± 20%: MFR 14304, PN C11-0005-104
CR1	Diode: MFR 17540, PN DKV6520B
L1	Inductor, 33 uH: MFR 99800, PN 1537-51
L2, L3	Inductor, 15 uH: MFR 99800, PN 1537-40
L4	Inductor, 2.7 uH: MFR 99800, PN 1537-22
L5	Not Used
L6	Inductor, 33 uH: MFR 99800, PN 1537-51
L7	Inductor, 10 uH: MFR 99800, PN 1537-36-5%
L8	Inductor, 2.7 uH: MFR 99800, PN 1537-22
L9-L12	Not Used
L13	Inductor, 2.7 uH: MFR 99800, PN 1537-22
L14	Inductor, 15 uH: MFR 99800, PN 1537-40
L15	Inductor, 27 uH: MFR 99800, PN 1537-47
Q1	Transistor, NPN: Type 2N5179
Q2	Not Used
Q3	Transistor, FET: Type 2N5397
Q4	Transistor, NPN: Type 2N5179
R1	Resistor, Variable Potentiometer, 10K: MFR 32997, PN 3299X-1-103
R2	Resistor, Variable Potentiometer, 100 Ω: MFR 32997, PN 3299X1-101
R3	Resistor, Fixed Composition, 56K ± 10%, ¼W: Mil type RC07GF563J
R4	Resistor, Fixed Composition, 68K ± 10%, ¼W: Mil type RC07GF683J

Reference Designation	Name and Description
R5	Not Used
R6	Resistor, Fixed Composition, 180 Ω ± 10%, ¼W: Mil type RC07GF181J
R7	Not Used
R8	Resistor, Fixed Composition, 33 Ω ± 10%, ¼W: Mil type RC07GF330J
R9, R10	Resistor, Fixed Composition, 10K ± 10%, ¼W: Mil type RC07GF103J
R11	Resistor, Fixed Composition, 100 Ω ± 10%, ¼W: Mil type RC07GF101J
R12, R13	Resistor, Fixed Composition, 6.8K ± 10%, ¼W: Mil type RC07GF682J
R14, R15	Resistor, Fixed Composition, 1K ± 10%, ¼W: Mil type RC07GF102J
R16, R17	Not Used
R18	Resistor, Fixed Composition, 10K ± 10%, ¼W: Mil type RC07GF103J
R19	Resistor, Fixed Composition, 330 Ω ± 10%, ¼W: Mil type RC07GF331J
R20	Resistor, Fixed Composition, 1M Ω ± 10%, ¼W: Mil type RC07GF105J
R21	Resistor, Fixed Composition, 56 Ω ± 10%, ¼W: Mil type RC07GF560J
R21-R25	Not Used
R26	Resistor, Fixed Composition, 1K ± 10%, ¼W: Mil type RC07GF102J
R27	Resistor, Fixed Composition, 3.9K ± 10%, ¼W: Mil type RC07GF392J
R28	Resistor, Fixed Composition, 1K ± 10%, ¼W: Mil type RC07GF102J
R29	Not Used
R30	Resistor, Fixed Composition, 1K ± 10%, ¼W: Mil type RC07GF102J
R31, R32	Not Used
R33	Resistor, Fixed Composition, 3.9K ± 10%, ¼W: Mil type RC07GF392J
R34	Resistor, Fixed Composition, 10 Ω ± 10%, ¼W: Mil type RC07GF100J
R35	Resistor, Fixed Composition, 100K ± 10%, ¼W: Mil type RC07GF104J
R36	Resistor, Fixed Composition, 10K ± 10%, ¼W: Mil type RC07GF103J
R37	Resistor, Fixed Composition, 10 Ω ± 10%, ¼W: Mil type RC07GF100J

Table 3. MAINTENANCE PARTS LIST-A2A14 Low Band PLL (Cont.)

Reference Designation	Name and Description
R38, R39	Resistor, Fixed, Composition, 56 ohms, ±5%, ¼W: MIL Type RC07GF560J
R40	Resistor, Fixed, Composition, 10K, ±5%, ¼W: MIL Type RC07GF103J
R41	Resistor, Fixed, Composition, 3.3K, ±5%, ¼W: MIL Type RC07GF332J

Reference Designation	Name and Description
R42, R43	Resistor, Fixed, Composition, 220 ohms, ±5%, ¼W: MIL Type RC07GF221J
TP1	Test Point PWB: MFR 74970, PN 105-0851-001
TP2	Test Point PWB: MFR 74970, PN 105-0852-001

NOTES:

1. UNLESS OTHERWISE SPECIFIED:

   A. ALL RESISTORS ARE IN OHMS, ¼ WATT.
   B. ALL CAPACITORS ARE IN MICROFARADS.

2. PREFIX INCOMPLETE REFERENCE DESIGNATORS WITH A2A14 PLUS SUB-ASSEMBLY DESIGNATOR IF ANY.

3. FOR RF-550, JUMPER A2A14A2E12 TO E13, E15 TO E16, AND E17 TO E18.

4. FOR RF-131, JUMPER A2A14A2E13 TO E14, NO CONNECTION AT E12, OR E15 THROUGH E18.

5. REFER TO TABLE 1 FOR LISTING OF SEMICONDUCTOR TYPES

6. WAVE FORMS ARE SHOWN FOR LOCKED LOOP.

7. HEIGHT OF RAMP FOR LOW LOCK STATE IS APPROXIMATELY 1V.
   HEIGHT OF RAMP FOR HIGH LOCK STATE IS APPROXIMATELY 4V.
   LOOP MAY BE IN HIGH OR LOW LOCK STATE AT ANY TIME.

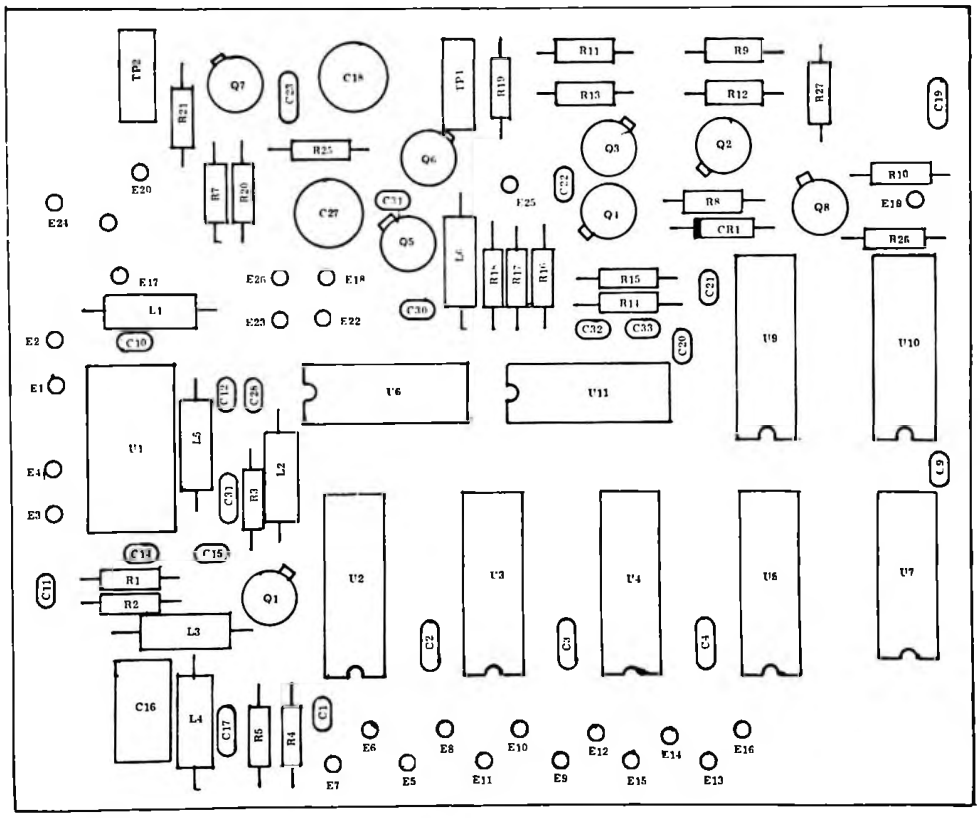

Figure 7. Low Band PLL Module ÷M PWB Component Location

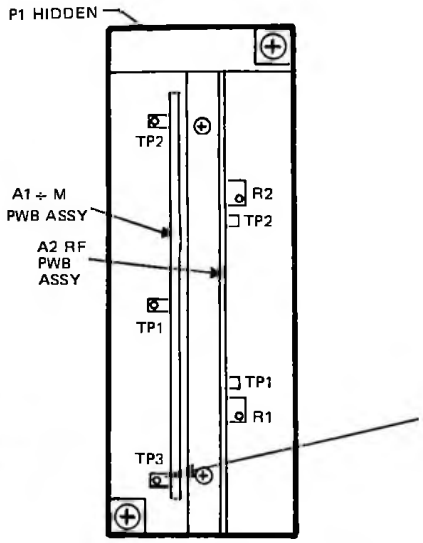

NOTES:
See figure 8 for all notes.

TP3 has TTL level pulses when loop is unlocked, and remains high when loop is locked.

Figure 4. Low Band PLL Assembly, Component Locations

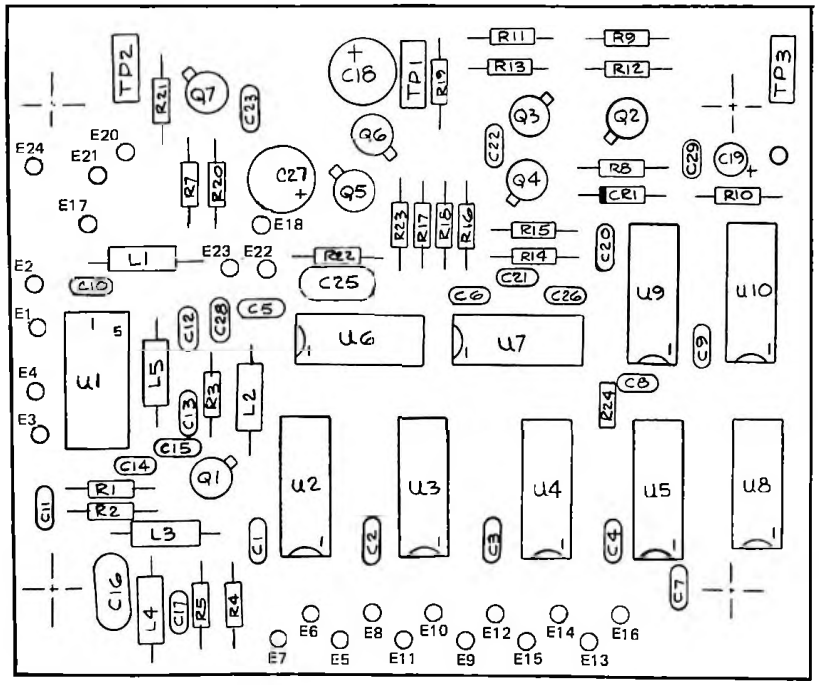

Figure 5. ÷ M PW Board Component Locations

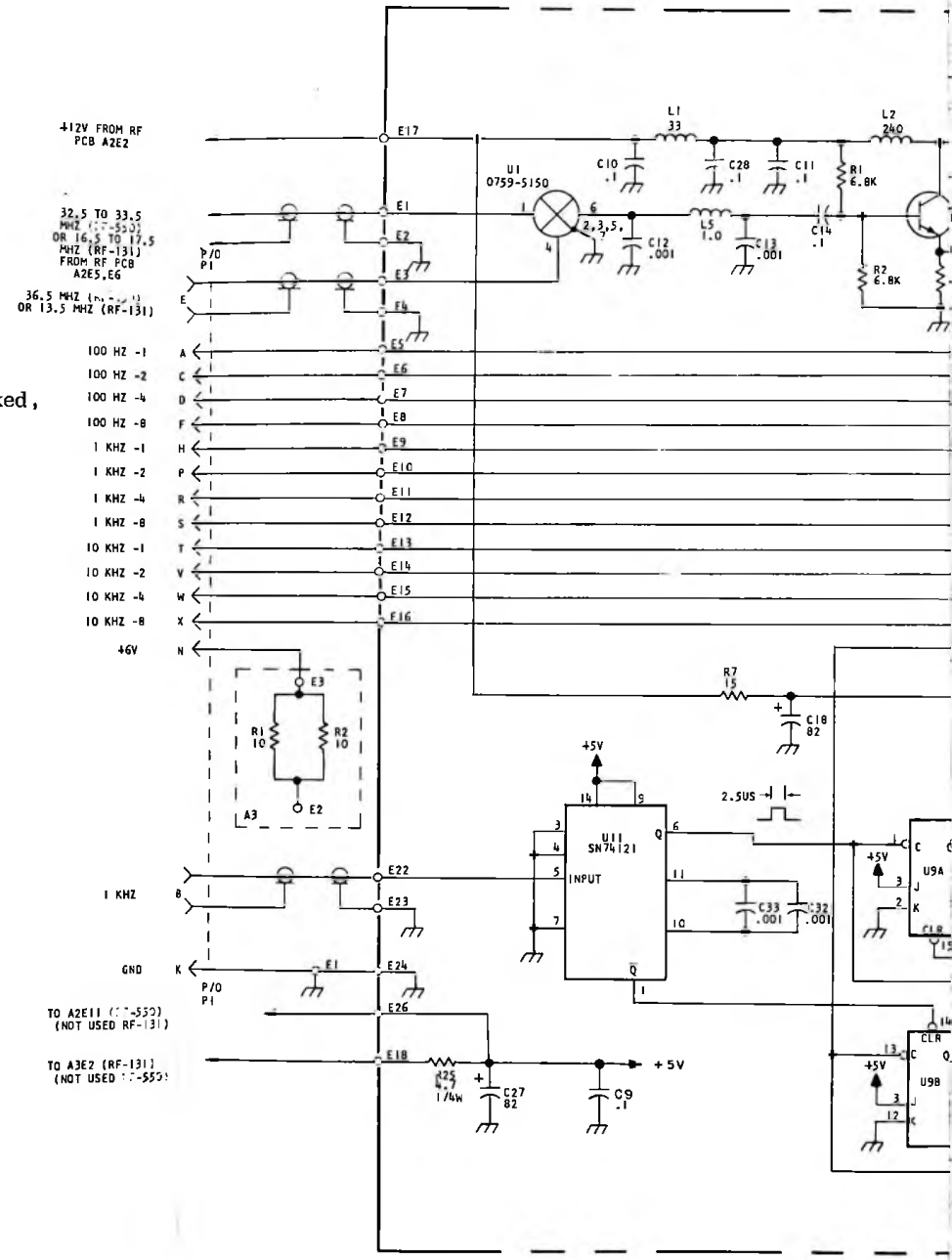

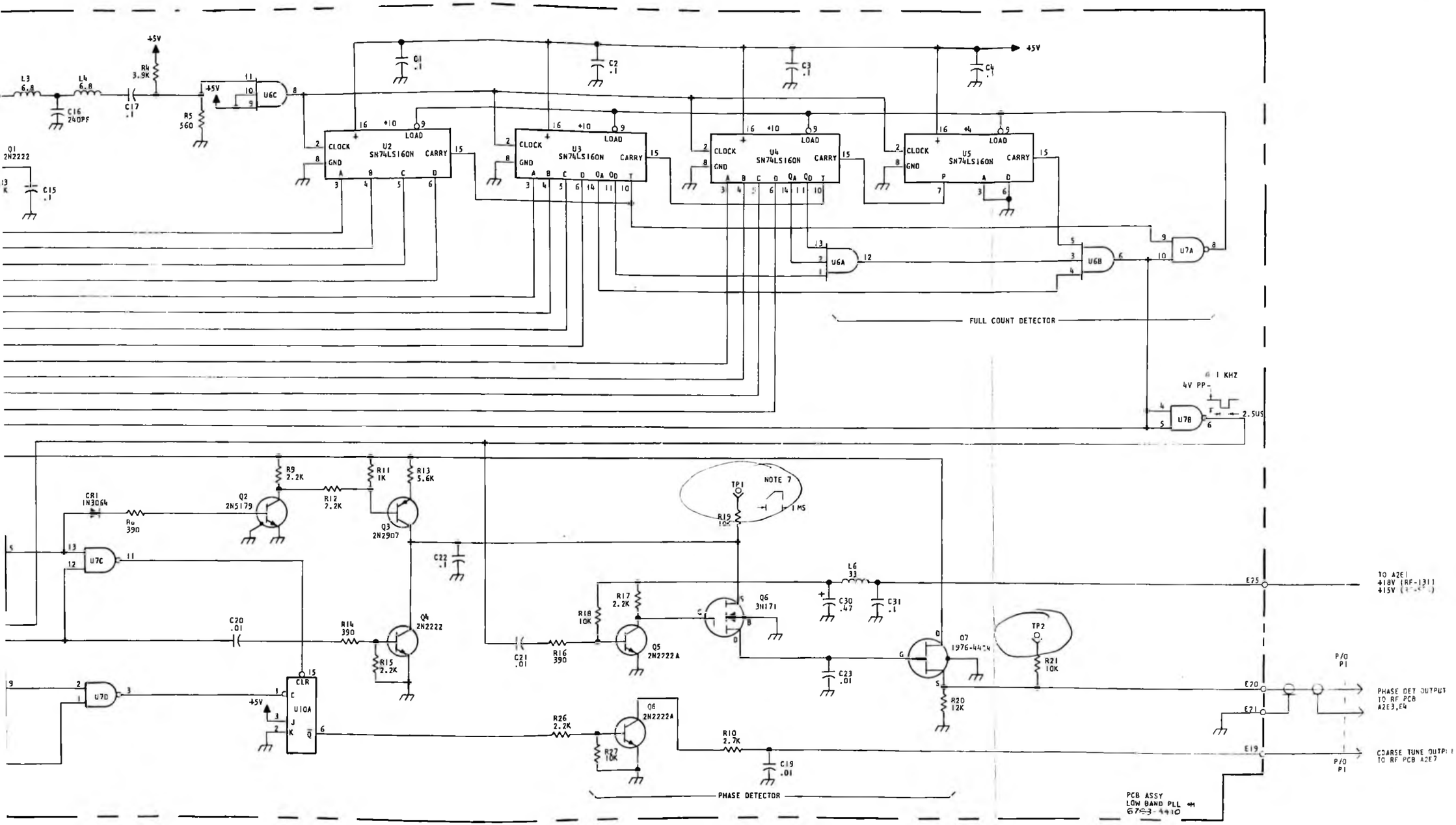

Figure 8. Low Band PLL Module ÷ M PWB A2A14A1 Schematic Diagram

NOTES:

1. UNLESS OTHERWISE SPECIFIED:

   A. ALL RESISTORS ARE IN OHMS, ¼ WATT.
   B. ALL CAPACITORS ARE IN MICROFARADS.

2. PREFIX INCOMPLETE REFERENCE DESIGNATORS WITH A2A14 PLUS SUB-ASSEMBLY DESIGNATOR IF ANY.

3. FOR RF-550, JUMPER A2A14A2E12 TO E13, E15 TO E16, AND E17 TO E18.

4. FOR RF-131, JUMPER A2A14A2E13 TO E14, NO CONNECTION AT E12, OR E15 THROUGH E18.

5. REFER TO TABLE 1 FOR LISTING OF SEMICONDUCTOR TYPES

6. WAVE FORMS ARE SHOWN FOR LOCKED LOOP.

7. HEIGHT OF RAMP FOR LOW LOCK STATE IS APPROXIMATELY 1V.
   HEIGHT OF RAMP FOR HIGH LOCK STATE IS APPROXIMATELY 4V.
   LOOP MAY BE IN HIGH OR LOW LOCK STATE AT ANY TIME.

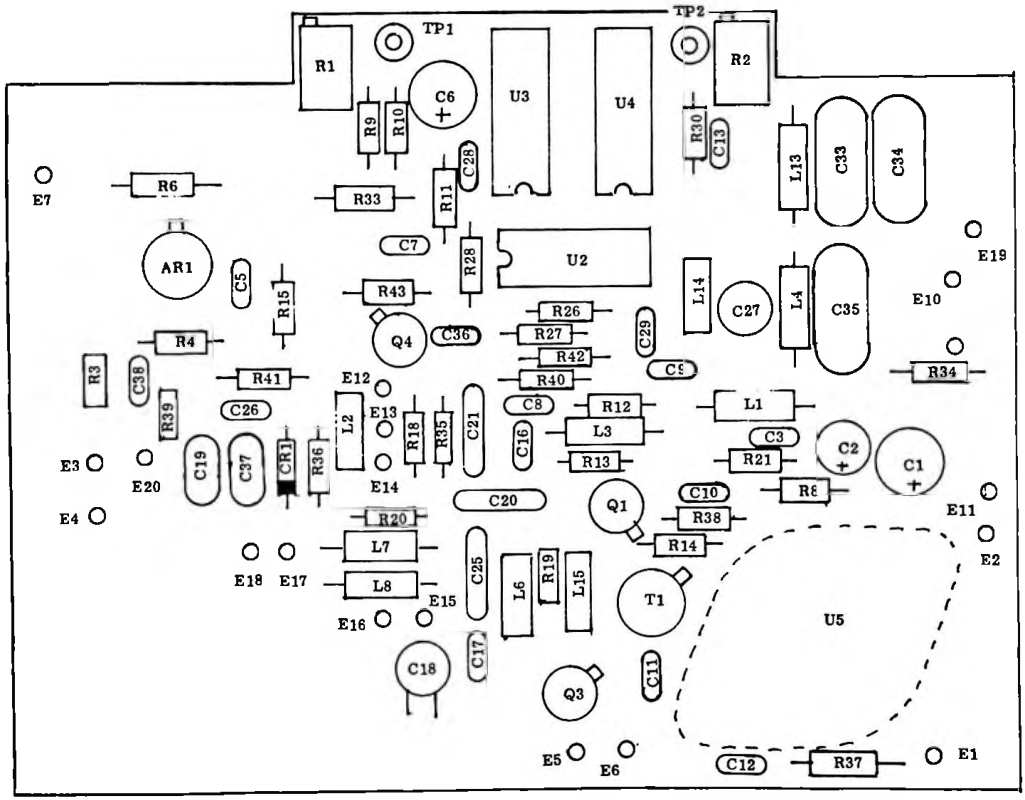

Figure 9. Low Band PLL Module-RF PWB Component Location

NOTES:

1. Unless otherwise specified, all capacitors are in microfarads, all inductors are in microhenries, and all resistors are in ohms, $\frac{1}{4}$W, $\pm$ 10%.
2. Prefix all reference designators with A2A14 and applicable subassembly.
3. For RF-550, jumper A2A14A2 E12 to E13, E15 to E16, and E17 to E18. For RF-131, A2A14A2 E13 to E14. No connection E12 or E15 through E18.
4. On A2A14A1, U6 is SN74LS11N, U7, U8, are SN74LS00N. U9, U10 are SN74LS112N. Pin 14 of U6, U7, U8 is +5V. Pin 16 of U9, U10 is +5V. Pin 7 of U6, U7, U8 is ground. Pin 8 of U9, U10 is ground.
5. On A2A14A2, U2 is SN74S11N, U3, U4 are SN74S112N. Pin 14 of U2 is +5V. Pin 16 of U3, U4 is +5V. Pin 7 of U2 is ground. Pin 8 of U3, U4 is ground.
6. Typical waveforms are shown for loop locked.
7. Approximately: 1V @ "000" to 6V @ "999" (RF-131).
   4V @ "000" to 8V @ "999" (RF-550).

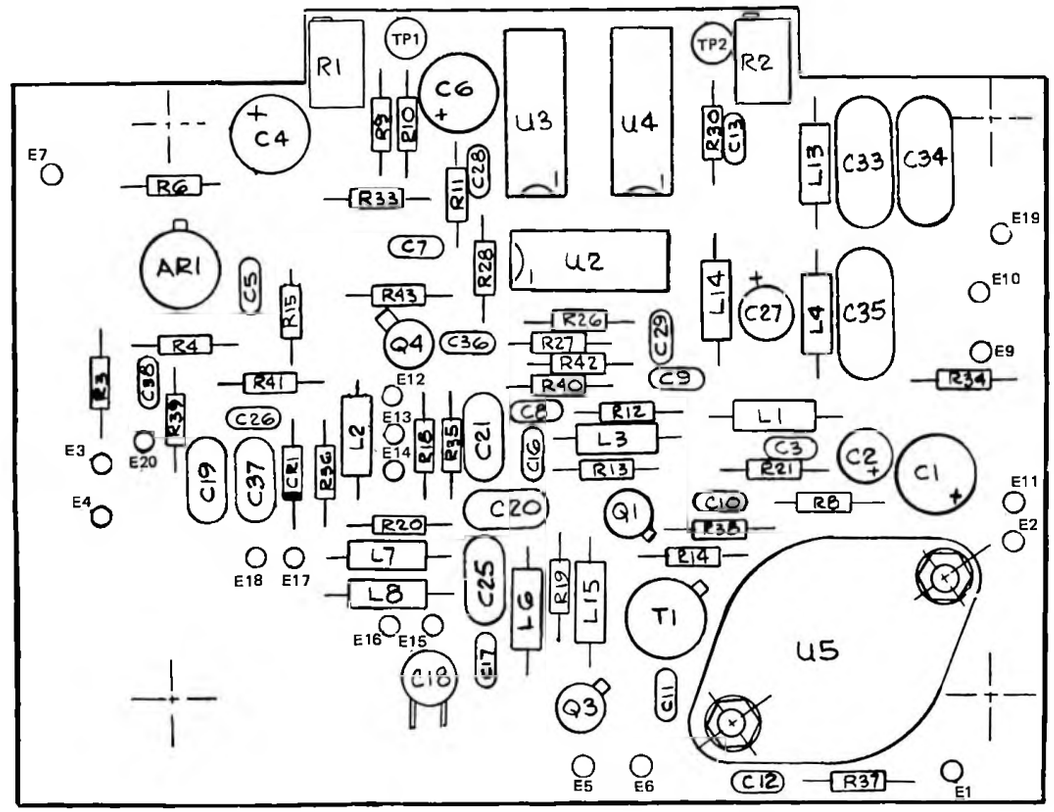

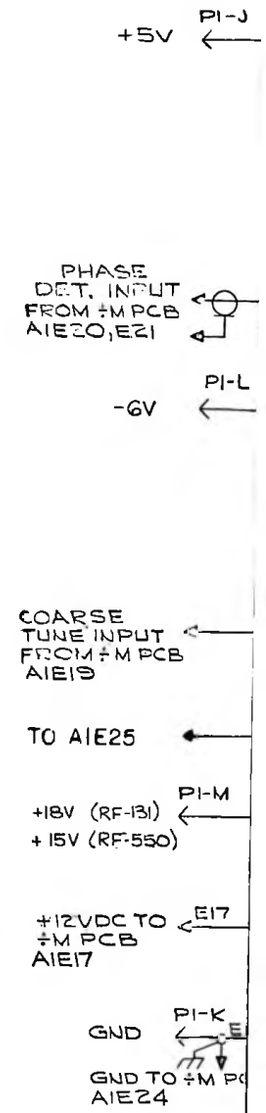

Figure 7. RF PW Board Component Locations

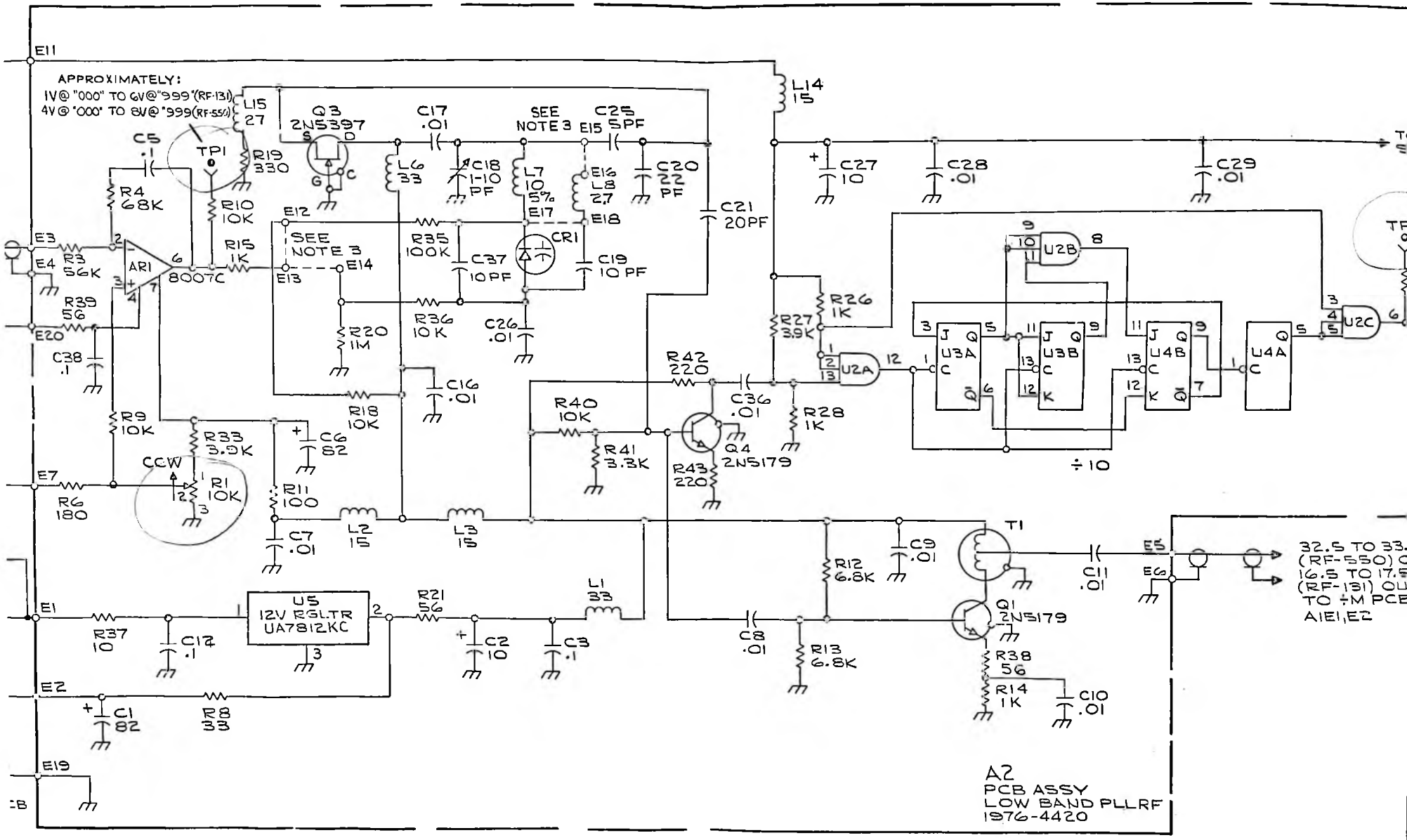
APPROXIMATELY:
1V @ "000" TO 6V @ "999" (RF-131)
4V @ "000" TO 8V @ "999 (RF-550)
E11
L15 27
Q3 2N5397
C17 .01
SEE NOTE 3
C25 5PF
E15
L14 15
C5 .1
TP1
R19 330
L6 33
C18 1-10 PF
L7 10 5%
E16
L8 2.7
C20 22 PF
C27 10
C28 .01
C29 .01
R4 68K
R10 10K
E12
E17
E18
C21 20PF
E3
R3 56K
E4
AR1
8007C
R15 1K
SEE NOTE 3
E13
E14
R35 100K
C37 10PF
CR1
C19 10 PF
R39 56
E20
R36 10K
C26 .01
R20 1M
R26 1K
R27 3.9K
U2B
U2A
U3A
U3B
U4B
U4A
U2C
÷10
C38 .1
C16 .01
R42 220
C36 .01
R28 1K
R18 10K
R40 10K
R41 3.3K
Q4 2N5179
R43 220
R9 10K
R33 3.9K
C6 82
CCW
E7
R6 180
R1 10K
R11 100
C7 .01
L2 15
L3 15
T1
R12 6.8K
C9 .01
C11 .01
E5
E6
32.5 TO 33.
(RF-550) O
16.5 TO 17.5
(RF-131) OU
TO ÷M PCE
A1E1,E2
E1
R37 10
C12 .1
U5 12V RGLTR UA7812KC
R21 56
L1 33
C2 10
C3 .1
C8 .01
R13 6.8K
Q1 2N5179
R38 56
R14 1K
C10 .01
E2
C1 82
R8 33
E19
A2
PCB ASSY
LOW BAND PLLRF
1976-4420

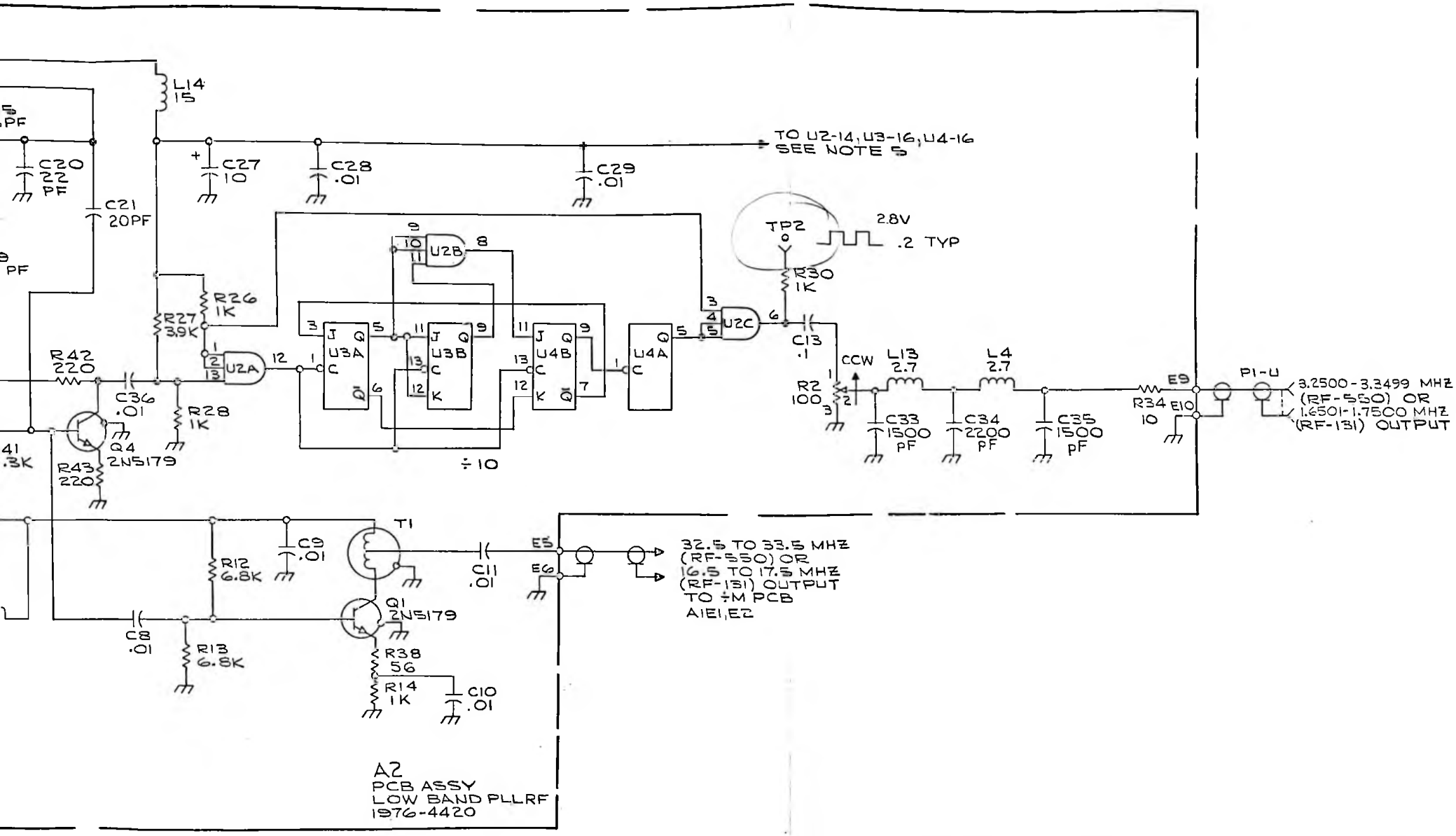

Figure 10. Low Band PLL Module-RF PWB A2A14A1 Schematic Diagram

A2A15

UNIT INSTRUCTIONS

VFO/BFO TRANSLATOR ASSEMBLY

A2A15

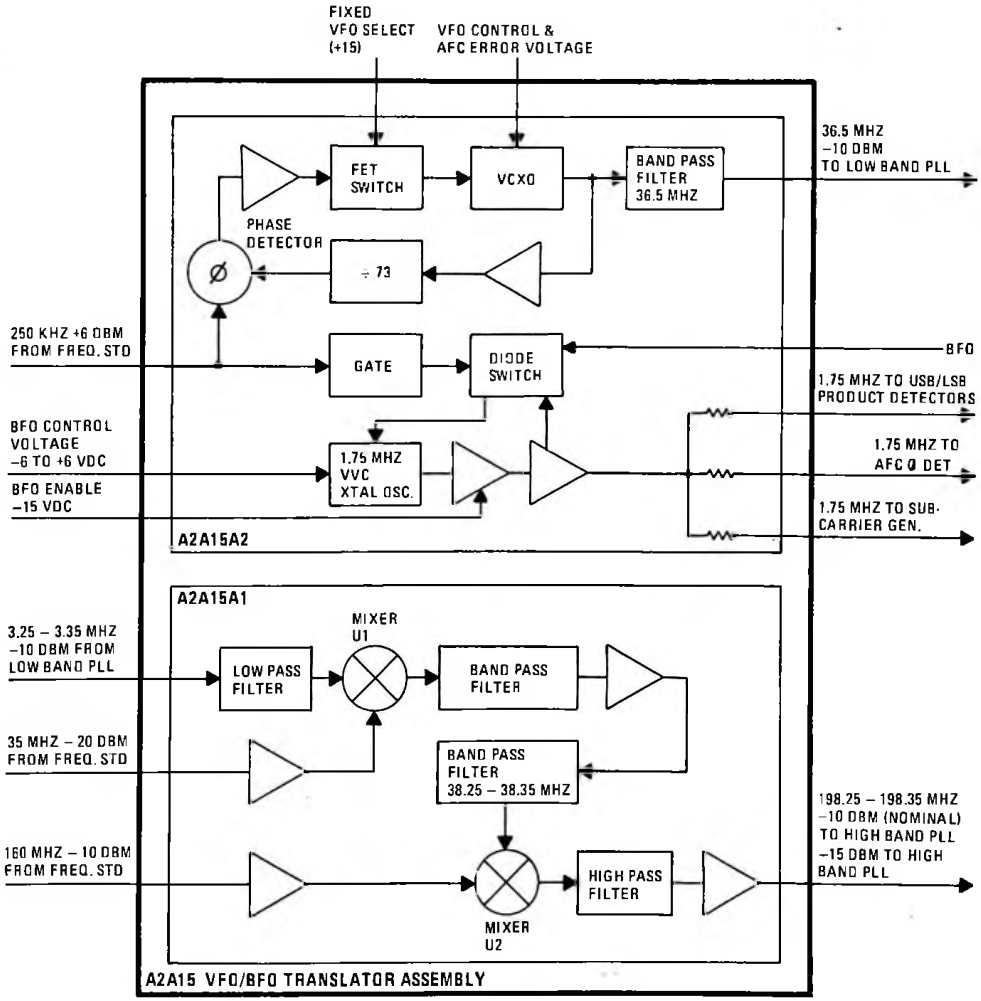

TABLE OF CONTENTS

A2A15

Paragraph		Page
1	General Description	1
2	Technical Characteristics	1
3	Semiconductor Complement	1
4	Circuit Description	1
4.1	Translator PWB Assembly A1	1
4.2	VFO/BFO PWB Assembly A2	2
5	Maintenance	3
5.1	VFO/BFO PWB Assembly A2A15A2	3
5.2	Translator PWB Assembly A2A15A1	4
6	Parts List	5
7	Component Location and Schematic Diagrams	5
Table		
1	Parts List	6
2	Index of Manufacturers' Codes	14
Figure		
1	A2A15 Test Setup	3
2	Translator PWB Assembly Component Locations	17
3	VFO/BFO Translator Assembly, Schematic Diagram	17
4	VFO/BFO Translator Assembly, Component Locations	19
5	VFO/BFO PWB Assembly, Component Locations	19

1. GENERAL DESCRIPTION

VFO/BFO Translator Assembly A2A15 is a plug-in, modularized assembly comprising Translator Assembly A1 and VFO/BFO Assembly A2. Assembly A1 translates 3.25 - 3.35 MHz Low Band PLL output frequencies to the 198.25 - 198.35 MHz High Band PLL input range; Assembly A2 contains two voltage controlled crystal oscillators and control circuits that generate BFO and VFO frequencies required for frequency conversion and product detection in the various modes of receiver operation. The BFO and VFO oscillator frequencies can be controlled by a reference frequency from the frequency standard, by a variable voltage from a manual control on the front panel or a remote control panel, or, in the case of the VFO, a control voltage from the AFC system.

2. TECHNICAL CHARACTERISTICS

Weight:
1 pound, 1 ounce (481.9 grams)

Dimensions:
4.125H x 2.125W x 5.875D (inches)
10.47H x 5.39W x 14.9D (cm)

Power Requirements:
+ 5 Vdc
+15 Vdc
-15 Vdc

Signal Inputs:
250 kHz; TTL
3.25 to 3.35 MHz; -10 dBm
35 MHz; -20 dBm
160 MHz; -10 dBm

Signal Outputs:
36.5 MHz; -10 dBm
1.75 MHz; -10 dBm
198.25 to 198.35 MHz; -10 dBm

3. SEMICONDUCTOR COMPLEMENT

REF. DESIG.	TYPE	DESCRIPTION
A2A15A1		
Q1 through Q4	2N4179	Transistor, NPN
U1 & U2	MD-108	Mixer
A2A15A2		
AR1	741	OP AMP
CR1 & CR2	1920-0615	Diode, Tuning
CR3 through CR5	1N3064	Diode
CR6	1920-0615	Diode, Tuning
Q1 through Q3	2N2222	Transistor, NPN
Q4	U1899E	Transistor, J-FET, N-Channel
Q5 through Q7	2N5179	Transistor, NPN
U1	MC4044P	Phase Detector
U2	SN74S10N	Triple 3-Input NAND
U3 & U4	SN74160N	Decade Counter
VR1 & VR2	1N4735	Diode, Zener, 6.2V

4. CIRCUIT DESCRIPTION

4.1 TRANSLATOR PWB ASSEMBLY A1

Translator PWB Assembly A1 (figure 3, sheet 1) accepts the Low Band PLL output in the frequency range of 3.25 to 3.35 MHz and translates this range by two frequency conversions to the 198.25 to 198.35 MHz High Band PLL input range. The 3.25 to 3.35 MHz input at P1-E is introduced at the I port of double balanced mixer U1 through a low pass filter (C5, C6 and L2) and additively mixed with a 35 MHz signal from Frequency Standard Assembly A2A7. Amplifier Q1 provides approximately 20 dB of gain to the 35 MHz signal. The output impedance of Q1 is matched by T1 to the input impedance of the L port of U1. The mixer provides a minimum of 40 dB isolation between the L and R ports. The conversion loss is 7 dB, maximum. L5 and L6 at the mixer output are tuned to select the 38.25 to 38.35 MHz components and, together with the capacitive elecments, constitute a band pass filter. Q2 buffers this output and adds a fixed gain. L8, L9,

L10, and L11 are peaked in the 38.25 to 38.35 signal frequency range and function specifically to ensure that the 35 MHz mixer frequency component is at least 65 dB below signals in the 38.25 to 38.35 MHz range. The 38.25 to 38.35 MHz signal is introduced at the R port of U2 and additively mixed with the 160 MHz reference input from Frequency Standard A2A7 to produce the 198.25 to 198.35 MHz Translator output frequency range. L12 and L13 in combination with C28 and C29 are a high pass filter with a cutoff frequency of approximately 192 MHz. The output signal is amplified by Q3. Matching transformer T3 provides a 50-ohm output at a nominal level of -10 dBm.

4.2 VFO/BFO PWB ASSEMBLY A2

Two separate voltage controlled crystal oscillators on Assembly A2 (figure 3, sheets 2 and 3) generate the BFO and VFO frequencies. Positive or negative control voltages are applied to varactors CR1 and CR2, to swing the BFO frequency ±1 kHz from the 1.75 MHz crystal frequency. Similar control voltages at varactor CR6 in the VFO VCXO produce a ±10 kHz change in the 36.5 MHz output frequency.

Fixed frequencies, each derived from the same 250 kHz standard, can also be selected to generate the BFO or VFO outputs. Front panel TUNING MODE switch S6 (or similar remote control switching) provides for tuning mode selections through Control I and Control II PWB Assemblies. In the FIXED tuning mode, +15V is present at A2E5 and A2E14 on VFO/BFO PWB Assembly A2. A +15V control output at A2A10 P1-16 biases off FET switch Q4 on the Control II assembly and removes local or remote BFO control inputs from E1 (P1-F) on the VFO/BFO assembly. The +15V at E14 biases on CR3 and selects the 250 kHz input from the frequency standard through enabling NAND gate U2. With CR3 on, the signal path is through C4, the 1.75 MHz oscillator circuitry, and through C3 to Q1. This signal path through the 1.75 MHz oscillator circuit and the filter network between Q1 and Q2 selects the 7th harmonic of the 250 kHz input and provides a fixed 1.75 MHZ output. The signal is available at the three power divider outputs: P1-V, -W, and -X.

Fixed mode VFO control makes use of the same 250 kHz reference input; however, control is effected through a phase locked loop. U2-9, -10, and -11 are tied together so that the device functions as an inverter to the 250 kHz TTL level input signal. The output at U2-8 drives pin 1 of phase detector U1. In the FIXED mode, +15V at E5 biases on FET switch Q4 and selects the U1 output through operational amplifier AR1. The voltage at this point controls the VFO operating frequency by controlling varactor CR6. The normal operating frequency of Y2 is 18.25 MHz, the 73rd harmonic of the reference input. This output is amplified by Q5 and used to drive decade counters U3 and U4. The counters divide by 73 and generate a "feed-back" 250 kHz signal for comparison with the reference frequency at phase detector U1. The output of phase detector U1, at pins 5 and 10, is filtered by loop filter R29, R30, and C18. AR1 amplifies this output and generates a dc voltage proportional to the phase error between the 250 kHz reference and the feed-back sample. The magnitude and polarity of the voltage at varactor CR6 act to correct the error.

R40 functions as a ±10 kHz range adjustment. R56 establishes a dc pre-bias on varactor CR6 to center the tuning range. C26 is used to peak the oscillator output at 18.25 MHz.

The band pass filter following Q7 is tuned to the 2nd harmonic of the VCXO frequency and provides the 36.5 MHz output to Low Band PLL Assembly A2A14. Trimmer capacitors

C35 and C43 are used to peak the output at 36.5 MHz. When front panel TUNING MODE switch S6 is moved from the FIXED position, the 250 kHz reference is removed from the BFO, VFO or both, depending on the position selected.

When FIXED tuning is not selected, VFO frequency can be controlled by local or remote manual controls or through the AFC system. In any tuning mode except FIXED, -15 Vdc is present at E5 and FET switch Q4 is biased off. In AFC mode, the reference voltage at E6 (P1-A) is provided by Phase Detector Assembly A2A6A4. In the VFO or VFO/BFO TUNING MODE, the reference voltage at E7 is provided by the Control II PWB Assembly. The feedback loop through Q5, U3, and U4 is not effective in any mode other than FIXED or BFO because Q4 is off and dividers U3 and U4 are disabled. The 36.5 MHz output is varied ±10 kHz as a function of manual local or remote control voltage or the AFC signal. The AFC system will maintain ±0 Hz error as described in the section covering assemblies A2A6A4 and A2A6A5.

In BFO or BFO/VFO tuning modes, the BFO control voltage at E1 (TP2) can be established by either local or remote control. In the LOCAL control mode, this voltage is established by kHz BFO control potentiometer R6. With BFO selected, -15 Vdc is present at E14 (P1-C) and CR4 is biased on, completing the feedback signal path through C5. This feedback path is opened in FIXED or VFO tuning modes to prevent self-oscillation of BFO VCXO. Q1 is enabled in all modes except AM by -15 Vdc at E2 (P1-S) from AR6 on Control I PWB Assembly A2A9. The BFO is thus automatically removed from the circuit in the AM mode. In the BFO or BFO/VFO modes, ±1 kHz BFO manual control is provided. The BFO is locked to a stable reference in the FIXED, VFO, or AFC tuning modes.

5. MAINTENANCE

Use this procedure to test and adjust VFO/BFO Translator Assembly A2A15. Set up RF-550 for test as shown in figure 1. Equivalent test equipment items can be used.

NOTE

VFO/BFO PWB Assembly adjustments must be performed prior to testing Translator PWB Assembly.

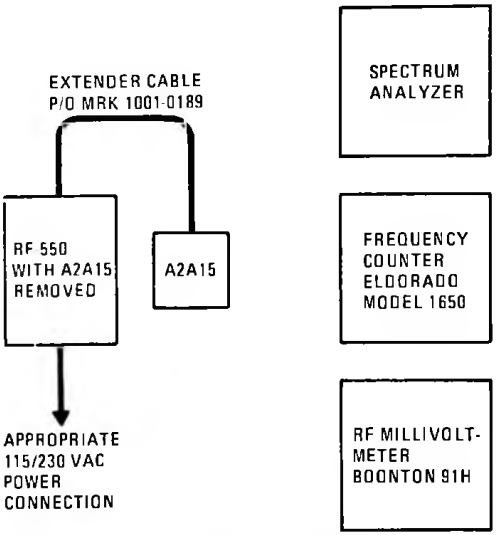

Figure 1. A2A15 Test Setup

5.1 VFO/BFO PWB Assembly A2A15A2

a. Test equipment required:
- DVM, Digitec 261C
- Frequency Counter, Heath SM-110A
- RF Voltmeter, Boonton 91H w/Hi Z probe

b. Select LOCAL control, USB RECEIVE mode, FAST AGC, and FIXED TUNING MODE.

c. Center front panel VFO and BFO controls (±0).

d. Connect RF voltmeter to VFO output at E15.

e. Connect DVM to anode of CR6 and adjust R56 for a reading of -8.00 Vdc. Disconnect DVM.

f. Adjust C26, C35 and C43 for a maximum level as read on RF voltemeter. A level of -10 ± 2 dBm should be obtainable. Disconnect RF voltmeter.

g. Select VFO TUNING mode.

h. Connect frequency counter to E15 and adjust L11 for a reading of 36.5000 MHz.

i. Adjust front panel VFO control knob to -1 kHz.

j. Adjust R40 (RANGE) for 36.4900 MHz, ±1000 Hz.

k. Adjust front panel VFO control knob to 1 kHz. Output frequency should be 36.5100 MHz ± 1000 Hz. If these limits are not obtained, alter setting of R56 slightly. Set VFO control knob to 0 kHz and adjust L11 for a center frequency of 36.5000 MHz.

l. Repeat steps i, j, and k until the correct range and linearity, with a tolerance of ±1000 Hz at each end point, is achieved.

m. Select FIXED TUNING mode. A reading of 36,500,000 should be obtained (VFO is now phase locked to frequency standard).

NOTE

Receiver and counter should have same frequency standard to obtain required results.

n. Connect RF voltmeter to BFO output at E10.

o. Connect DVM to anode of CR1 and adjust R25 for a reading of -8.5 Vdc, disconnect DVM. Preset L7 slug counter clockwise approximately one-half way out of can.

p. Adjust C7 for maximum level on RF voltmeter. Now adjust L7 for maximum output approaching peak from clockwise direction. A level of -10 ± 2 dBm should be obtained. Disconnect RF voltmeter.

q. Connect frequency counter to E10. A reading of 1,750,000 Hz should be obtained (BFO is now referenced to frequency standard).

r. Select BFO tuning mode.

s. Adjust R25 for a reading of 1.7500 MHz (make sure that BFO control knob is still set for ± 0 kHz).

t. Set BFO control knob for -1 kHz and adjust R2 for a frequency of 1.7490 MHz ± 150 Hz. Set BFO control knob for +1 kHz. A reading of 1.7500 MHz ± 150 Hz should be obtained. If not, alter setting of R25 slightly. Set BFO control knob for ±0 kHz and adjust L7 for 1.7500 MHz.

u. Repeat Steps s and t until correct linearity, and range, with a tolerance of ±150 Hz. at each end point, is achieved.

5.2 TRANSLATOR PWB ASSEMBLY A2A15A1

a. Test equipment required:
- Spectrum Analyzer with 1200 MHz RF Section
- Extender Cable, P/O MRK 1001-0189

b. With RF-550 in LOCAL control mode, select any frequency ending in XXX555 MHz, USB RECEIVE MODE, FAST AGC, and FIXED TUNING MODE.

c. Using spectrum analyzer, verify presence of the following signals:

(1) At E5, verify 160 MHz at -10 dBm
(2) At E1, verify 35 MHz at -20 dBm
(3) At E3, verify 3.3 MHz at -10 dBm

d. Connect spectrum analyzer to A2A8 pin B. Adjust analyzer center frequency to 198.3 MHz and select a scan width of 10 MHz per division.

e. Tune L5, L6, L8, L9, L10, and L11 to peak output at 198.3 MHz. Output level should be -15 ± 2 dBm.

f. If problem exists, verify following bias voltages:

	EMITTER	BASE	COLLECTOR
Q1	-8.15 ±0.4V	-7.5 ±0.4V	0V
Q2	-8.15 ±0.4V	-7.5 ±0.4V	-1.8 ±0.2V
Q3	-8.15 ±0.4V	-7.5 ±0.4V	0V
Q4	-8.15 ±0.4V	-7.5 ±0.4V	0V

g. This completes tests and adjustments.

6. PARTS LIST

Table 1 is a listing of replaceable parts in VFO/BFO Translator Assembly A2A15. Table 2 lists related manufacturers' codes.

7. COMPONENT LOCATION AND SCHEMATIC DIAGRAMS

Figures 2 through 5 show all related schematic and component location drawings.

NOTICE

In some instances, the Integrated Circuit (IC) component types listed herein differ from those of the actual component. These components are physically and electronically interchangeable. Either type can be used for replacement purposes.

12 490
1.7 5
12 510

TABLE 1. PARTS LIST

REF DESIG	NOTES	NAME AND DESCRIPTION	FIG. NO
A2A15		VFO/BFO Translator Assembly: MFR 14304, PN 1920-1400	
MP1 to MP9		Connector Pin, Coaxial: MFR 81312, PN 100-8001S95	
MP10 to MP19		Connector Pin, Male: MIL Type MS17803-16-20	
P1		Connector, Rectangular, 20 Pin: MFR 81312, PN MRAC20PN7	
A2A15A1		Translator PWB Assembly: MFR 14304, PN 1920-2250	
C1		Capacitor, Fixed, Mica, 15 pF, ±5%, 500V: MIL Type CM05CD150J03	
C2 to C4		Capacitor, Fixed, Ceramic, 0.01 μF, ±20%, 50V: MFR 14304, PN C11-0005-103	
C5, C6		Capacitor, Fixed, Mica, 750 pF, ±5%, 500V: MIL Type CM06FD751J03	
C7		Capacitor, Fixed, Ceramic, 0.01 μF, ±20%, 50V: MFR 14304, PN C11-0005-103	
C8		Capacitor, Fixed, Mica, 150 pF, ±5%, 500V: MIL Type CM05FD151J03	
C9		Capacitor, Fixed, Mica, 430 pF, ±5%, 500V: MIL Type CM06FD431J03	

REF DESIG	NOTES	NAME AND DESCRIPTION	FIG. NO.
C10		Capacitor, Fixed, Mica, 5 pF, ±5%, 500V: MIL Type CM05CD050D03	
C11		Capacitor, Fixed, Mica, 200 pF, ±5%, 500V: MIL Type CM05FD201J03	
C12		Capacitor, Fixed, Mica, 220 pF, ±5%, 500V: MIL Type CM05FD221J03	
C13 to C15		Capacitor, Fixed, Ceramic, 0.01 μF, ±20%, 50V: MFR 14304, PN C11-0005-103	
C16		Capacitor, Fixed, Mica, 200 pF, ±5%, 500V: MIL Type CM05FD201J03	
C17		Capacitor, Fixed, Mica, 240 pF, ±5%, 500V: MIL Type CM05FD241J03	
C18		Capacitor, Fixed, Ceramic, 2.2 pF, ±5%, 500V: MFR 14304, PN C4616	
C19		Capacitor, Fixed, Mica, 110 pF, ±5%, 500V: MIL Type CM05FD111J03	
C20		Capacitor, Fixed, Ceramic, 2.2 pF, ±5%, 500V: MFR 14304, PN C4616	
C21		Capacitor, Fixed, Mica, 110 pF, ±5%, 500V: MIL Type CM05FD111J03	

TABLE 1. PARTS LIST

REF DESIG	NOTES	NAME AND DESCRIPTION	FIG NO
C22		Capacitor, Fixed, Ceramic, 2.7 pF, ±5%, 500V: MFR 14304, PN C4618	
C23		Capacitor, Fixed, Mica, 130 pF, ±5%, 500V: MIL Type CM05FD131J03	
C24		Capacitor, Fixed, Mica, 430 pF, ±5%, 500V: MIL Type CM05FD431J03	
C25 to C27		Capacitor, Fixed, Ceramic, 0.001 µF, ±20%, 50V: MFR 14304, PN C11-0005-102	
C28		Capacitor, Fixed, Mica, 10 pF, ±5%, 500V: MIL Type CM05CD100J03	
C29 to C32		Capacitor, Fixed, Ceramic, 0.001 µF, ±20%, 50V: MFR 14304, PN C11-0005-102	
C33		Capacitor, Fixed, Tantalum, 10 µF, 35V: MFR 12954, PN D10GSC35M	
L1		Inductor, Fixed, RF, 0.33 µH: MIL Type LT4K076	
L2		Inductor, Fixed, RF, 1.5 µH: MIL Type LT4K083	
L3, L4		Inductor, Fixed, RF, 15 µH: MIL Type LT4K095	
L5, L6		Inductor, Variable, 0.15 µH: MFR 14304, PN L11-0004-003	
L7		Inductor, Fixed, RF, 15 µH: MIL Type LT4K095	
L8 to L11		Inductor, Variable, 0.15 µH: MFR 14304, PN L11-0004-003	
L12, L13		Inductor, Fixed, RF, 30 nH: MFR 14304, PN 1920-0610	
L14, L15		Inductor, Fixed, RF, 1.5 µH: MIL Type LT4K083	
Q1 to Q4		Transistor, NPN: Type 2N5179	
R1, R2		Resistor, Fixed, Composition, 6.8K, ±10%, 1/4W: MIL Type RCR07G682KM	
R3		Resistor, Fixed, Composition, 560 ohms, ±10%, 1/4W: MIL Type RCR07G561KM	
R4		Resistor, Fixed, Composition, 220 ohms, ±10%, 1/4W: MIL Type RCR07G221KM	
R5, R6		Resistor, Fixed, Composition, 6.8K, ±10%, 1/4W: MIL Type RCR07G682KM	
R7		Resistor, Fixed, Composition, 820 ohms, ±10%, 1/4W: MIL Type RCR07G821KM	
R8		Resistor, Fixed, Composition, 220 ohms, ±10%, 1/4W: MIL Type RCR07G221KM	

TABLE 1. PARTS LIST (Cont)

REF DESIG	NOTES	NAME AND DESCRIPTION	FIG NO
R9, R10		Resistor, Fixed, Composition, 6.8K, ±10%, 1/4W: MIL Type RCR07G682KM	
R11		Resistor, Fixed, Composition, 560 ohms, ±10%, 1/4W: MIL Type RCR07G561KM	
R12		Resistor, Fixed, Composition, 220 ohms, ±10%, 1/4W: MIL Type RCR07G221KM	
R13, R14		Resistor, Fixed, Composition, 6.8K, ±10%, 1/4W: MIL Type RCR07G682KM	
R15		Resistor, Fixed, Composition, 1K, ±10%, 1/4W: MIL Type RCR07G102KM	
R16		Resistor, Fixed, Composition, 220 ohms, ±10%, 1/4W: MIL Type RCR07G221KM	
R17, R18		Resistor, Fixed, Composition, 10K, ±10%, 1/4W: MIL Type RCR07G103KM	
R19		(Part of A1L12) Inductor, Fixed, RF, 30 nH: MFR 14304, PN 1920-0610	
R20		(Part of A1L13) Inductor, Fixed, RF, 30 nH: MFR 14304, PN 1920-0610	
T1 to T3		Transformer Assembly: MFR 14304, PN 1976-3824	

REF DESIG	NOTES	NAME AND DESCRIPTION	FIG NO
TP1		Jack, Test Point, White: MFR 74970, PN 105-0851-001	
TP2		Jack, Test Point, Red: MFR 74970, PN 105-0852-001	
U1, U2		Mixer: MFR 21912, PN MD-108	
A2A15A2		VFO/BFO PWB Assembly: MFR 14304, PN 1920-2260	
AR1		Integrated Circuit: MFR 14304, PN D50-0001-003	
C1		Capacitor, Fixed, Ceramic, 0.47 µF, ±20%, 50V: MFR 14304, PN C11-0005-474	
C2 to C5		Capacitor, Fixed, Ceramic, 0.1 µF, ±20%, 50V: MFR 14304, PN C11-0005-104	
C6		Capacitor, Fixed, Mica, 22 pF, ±5%, 500V: MIL Type CM05ED220J03	
C7		Capacitor, Variable, 1-16 pF: MFR 91293 PN 5453	
C8		Capacitor, Fixed, Mica, 390 pF, ±5%, 500V: MIL Type CM05FD391J03	
C9		Capacitor, Fixed, Ceramic, 0.1 µF, ±20%, 50V: MFR 14304, PN C11-0005-104	
C10		Capacitor, Fixed, Ceramic, 0.47 µF, ±20%, 50V: MFR 14304, PN C11-0005-474	
C11		Not Used	

TABLE 1. PARTS LIST (Cont)

REF DESIG	NOTES	NAME AND DESCRIPTION	FIG NO
C12		Capacitor, Fixed, Mica, 1500 pF, ±5%, 500V: MIL Type CM06FD152J03	
C13		Capacitor, Fixed, Mica, 510 pF, ±5%, 500V: MIL Type CM06FD511J03	
C14 to C17		Capacitor, Fixed, Ceramic, 0.1 μF, ±20%, 50V: MFR 14304, PN C11-0005-104	
C18 to C20		Capacitor, Fixed, Ceramic, 0.01 μF, ±20%, 50V: MFR 14304, PN C11-0005-103	
C21		Capacitor, Fixed, Tantalum, 82 μF, ±20%, 15V: MFR 12954, PN D82GSC15M	
C22		Capacitor, Fixed, Ceramic, 5 pF, ±1/2 pF, 1000V: MFR 56289, PN C036B102S5R0D	
C23		Capacitor, Fixed, Ceramic, 10 pF, ±1/2 pF, 1000V: MFR 56289, PN C036B102S100J	
C24, C25		Capacitor, Fixed, Mica, 10 pF, ±5%, 500V: MIL Type CM05CD100J03	
C26		Capacitor, Variable, 1-10 pF: MFR 73899, PN VAJ605	
C27, C28		Capacitor, Fixed, Ceramic, 0.01 μF, ±20%, 50V: MFR 14304, PN C11-0005-103	
C29		Capacitor, Fixed, Ceramic, 0.001 μF, ±20%, 50V: MFR 14304, PN C11-0005-102	
C30		Capacitor, Fixed, Mica, 68 pF, ±5%, 500V: MIL Type CM05ED680J03	
C31		Capacitor, Fixed, Ceramic, 0.01 μF, ±20%, 50V: MFR 14304, PN C11-0005-103	
C32		Capacitor, Fixed, Mica, 1 pF, ±5%, 500V: MIL Type CM05CD010J03	
C33		Capacitor, Fixed, Mica, 5 pF, ±5%, 500V: MIL Type CM05CD050D03	
C34		Capacitor, Fixed, Mica, 68 pF, ±5%, 500V: MIL Type CM05ED680J03	
C35		Capacitor, Variable, 1-10 pF: MFR 73899, PN VAJ605	
C36		Capacitor, Fixed, Ceramic, 0.001 μF, ±20%, 50V: MFR 14304, PN C11-0005-102	
C37		Capacitor, Fixed, Ceramic, 0.01 μF, ±20%, 50V: MFR 14304, PN C11-0005-103	
C38		Capacitor, Fixed, Mica, 10 pF, ±5%, 500V: MIL Type CM05CD100J03	

TABLE 1. PARTS LIST (Cont)

REF DESIG	NOTES	NAME AND DESCRIPTION	FIG NO
C39 to C41		Capacitor, Fixed, Ceramic, 0.01 µF, ±20%, 50V: MFR 14304, PN C11-0005-103	
C42		Capacitor, Fixed, Ceramic, 0.1 µF, ±20%, 50V: MFR 14304, PN C11-0005-104	
C43		Capacitor, Variable 1-10 pF: MFR 73899, PN VAJ605	
C44		Capacitor, Fixed, Tantalum, 82 µF, ±20%, 15V: MFR 12954, PN D82GSC15M	
C45		Capacitor, Fixed, Ceramic, 0.47 µF, ±20%, 50V: MFR 14304, PN C11-0005-474	
C46		Capacitor, Fixed, Tantalum, 10 µF, 35V: MFR 12954, PN D10GSC35M	
CR1, CR2		Diode, Tuning: MFR 14304, PN 1920-0615	
CR3 to CR5		Diode: Type IN3064	
CR6		Diode, Tuning: MFR 14304, PN 1920-0615	
L1		Inductor, Fixed, RF, 820 µH: MIL Type LT10K034	
L2		Not Used.	
L3		Inductor, Fixed, RF, 240 µH, MIL Type LT10K021	
L4		Inductor, Fixed, RF, 820 µH: MIL Type LT10K034	
L5, L6		Not Used	
L7		Inductor, Variable, 220 µH, MFR 14304, PN 1920-2286	
L8		Inductor, Fixed, RF, uH: 470 MIL Type LT10K028	
L9		Inductor, Fixed, RF, 820 µH: MIL Type LT10K034	
L10		Inductor, Fixed, RF, 3.9 µH: MIL Type LT4K088	
L11		Inductor, Variable, 6.8 µH: MFR 14304, PN 1C -0004-23	
L12		Inductor, Fixed, RF, 1.5 µH: MIL Type LT4K083	
L13		Inductor, Fixed, RF, 15 µH: MIL Type LT4K095	
L14		Inductor, Fixed, RF, 2.7 µH: MIL Type LT4K086	
L15		Inductor, Fixed, RF, 1.5 µH: MIL Type LT4K083	
L16		Inductor, Fixed, RF, 15 µH: MIL Type LT4K095	
L17		Inductor, Fixed, RF, 3.3 µH, MIL Type LT4K087	
L18		Inductor, Fixed, RF, 1 uH, LT10K036	
Q1, Q2		Transistor, NPN Type 2N2222	
Q3		Not Used	

TABLE 1. PARTS LIST (Cont)

REF DESIG	NOTES	NAME AND DESCRIPTION	FIG NO
Q4		Transistor, J-FET, N-Channel: MFR 17856, PN U1899E	
Q5 to Q7		Transistor, NPN; Type 2N5179	
R1		Resistor, Fixed, Composition, 10K, ±10%, 1/4W: MIL Type RCR07G103KM	
R2		Resistor, Variable, 100K: MFR 32997, PN 3299X-1-104	
R3		Resistor, Fixed, Composition, 15K, ±10%, 1/4W: MIL Type RCR07G153KM	
R4		Resistor, Fixed, Composition, 10M, ±10%, 1/4W: MIL Type RCR07G106KM	
R5, R6		Resistor, Fixed, Composition, 1K, ±10%, 1/4W: MIL Type RCR07G102KM	
R7		Resistor, Fixed, Composition, 100K, ±10%, 1/4W: MIL Type RCR07G104KM	
R8		Resistor, Fixed, Composition, 2.2K, ±10%, 1/4 W: MIL Type RCR07G222KM	
R9		Resistor, Fixed, Composition, 6.8K, ±10%, 1/4W: MIL Type RCR07G682KM	
R10,R11		Resistor, Fixed, Composition, 3.3K, ±10%, 1/4W: MIL Type RCR07G332KM	
R12		Resistor, Fixed, Composition, 180 ohms, ±10%, 1/4W: MIL Type RCR07G181KM	
R13		Resistor, Fixed, Composition, 330 ohms, ±10%, 1/4W: MIL Type RCR07G331KM	
R14, R15		Resistor, Fixed, Composition, 1K, ±10%, 1/4W: MIL Type RCR07G102KM	
R16		Resistor, Fixed, Composition, 680 ohms, ±10%, 1/4W: MIL Type RCR07G681KM	
R17		Resistor, Fixed, Composition, 39 ohms, ±10%, 1/4W, MIL Type RCR07G390KM	
R18		Resistor, Fixed, Composition, 27 ohms, ±10%, 1/4W, MIL Type RCR07G270KM	
R19, R20		Not Used	
R21, R22		Resistor, Fixed, Composition, 39 ohms, ±10%, 1/4W: MIL Type RCR07G390KM	
R23		Resistor, Fixed, Composition, 150 ohms, ±5%, 1/4W: MIL Type RCR07G151KM	
R24		Resistor, Fixed, Composition, 10K, ±10%, 1/4W: MIL Type RCR07G103KM	
R25		Resistor, Variable, 10K: MFR 32997, PN 3299X-1-103	

TABLE 1. PARTS LIST (Cont)

REF DESIG	NOTES	NAME AND DESCRIPTION	FIG NO
R26		Resistor, Fixed, Composition, 1.5K, ± 5%, 1/4W: MIL Type RCR07G152JM	
R27		Resistor, Fixed, Composition, 10K, ±5%, 1/4W: MIL Type RCR07G103JM	
R28		Resistor, Fixed, Composition, 4.7K, ±5%, 1/4W: MIL Type RCR07G472JM	
R29		Resistor, Fixed, Composition, 1.5K, ±10%, 1/4W: MIL Type RCR07G152KM	
R30, R31		Resistor, Fixed, Composition, 1.2K, ±10%, 1/4W: MIL Type RCR07G122KM	
R32		Resistor, Fixed, Composition, 4.7K, ±10%, 1/4W: MIL Type RCR07G472KM	
R33, R34		Resistor, Fixed, Composition. 1.5K, ±10%, 1/4W: MIL Type RCR07G152KM	
R35		Resistor, Fixed, Composition, 1M, ±10%, 1/4W: MIL Type RCR07G105KM	
R36, R37		Resistor, Fixed, Composition, 560 ohms, ±10%, 1/4W: MIL Type RCR07G561KM	

REF DESIG	NOTES	NAME AND DESCRIPTION	FIG NO
R38		Resistor, Fixed, Composition, 10K, ±10%, 1/4W: MIL Type RCR07G103KM	
R39		Resistor, Fixed, Composition, 100 ohms, ±10%, 1/4W: MIL Type RCR07G101KM	
R40		Resistor, Variable, 100K: MFR 32997, PN 3299X-1-104	
R41		Resistor, Fixed, Composition, 220 ohms, ±10%, 1/4W: MIL Type RCR07G221KM	
R42		Resistor, Fixed, Composition, 220K, ±10%, 1/4W: MIL Type RCR07G224KM	
R43		Resistor, Fixed, Composition, 10K, ±5%, 1/4W: MIL Type RCR07G103JM	
R44		Resistor, Fixed, Composition, 4.7K, ±5%, 1/4W: MIL Type RCR07G472JM	
R45, R46		Resistor, Fixed, Composition, 3.3K, ±10%, 1/4W: MIL Type RCR07G332KM	
R47		Resistor, Fixed, Composition, 4.7K, ±10%, 1/4W: MIL Type RCR07G472KM	

TABLE 1. PARTS LIST (Cont)

REF DESIG	NOTES	NAME AND DESCRIPTION	FIG NO
R48		Resistor, Fixed, Composition, 10K, ±10%, 1/4W: MIL Type RCR07G103KM	
R49, R50		Resistor, Fixed, Composition, 6.8K, ±10%, 1/4W: MIL Type RCR07G682KM	
R51		Resistor, Fixed, Composition, 2.2K, ±10%, 1/4W: MIL Type RCR07G222KM	
R52, R53		Resistor, Fixed, Composition, 68 ohms, ±10%, 1/4W: MIL Type RCR07G680KM	
R54		Resistor, Fixed, Composition, 10K, ±10%, 1/4W: MIL Type RCR07G103KM	
R55		Resistor, Fixed, Composition, 4.7K, ±10%, 1/4W: MIL Type RCR07G472KM	
R56		Resistor, Variable, 10K: MFR 32997, PN 3299X-1-103	
R57		Resistor, Fixed, Composition, 3.9K, ±5%, 1/4W: MIL Type RCR07G392JM	
R58		Resistor, Fixed, Composition, 220 ohms, ±10%, 1/4W: MIL Type RCR07G221KM	

REF DESIG	NOTES	NAME AND DESCRIPTION	FIG. NO.
R59		Resistor, Fixed, Composition, 3.9K, ±10%, 1/4W: MIL Type RCR07G392KM	
R60		Resistor, Fixed, Composition, 560 ohms, ±5%, 1/4W: MIL Type RCR07G561JM	
R61		Resistor, Fixed, Composition, 2.7K, ±10%, 1/4W: MIL Type RCR07G272KM	
RT1		Thermistor, 10K at 25°C: MFR 75263, PN PN RL21E1T	
TP1		Jack, Test Point, White: MFR 74970, PN 105-0851-001	
TP2		Jack, Test Point, Red: MFR 74970, PN 105-0852-001	
U1		Integrated Circuit: MFR 04713, PN MC4044P	
U2		Integrated Circuit: MFR 01295, PN SN74S10N	
U3, U4		Integrated Circuit: MFR 01295, PN SN74LS160AN	
VR1, VR2		Diode, Zener, 6.2V: Type 1N4735	
Y1		Crystal, 1.75 MHz: MFR 14304, PN 1920-0611	
Y2		Crystal, 18.25 MHz: MFR 14304, PN 1920-0612	
Z1, Z2		Ferrite Bead, MFR 29604, PN 57-0180	

TABLE 2. INDEX OF MANUFACTURERS' CODES

MFR CODE	MFR NAME AND ADDRESS
01295	Texas Instruments, Inc. Semiconductor Group P.O. Box 5012 13500 N. Central Expressway Dallas, Texas 75222
04713	Motorola, Inc. Semiconductor Products Div. 5005 East McDowell Road Phoenix, Arizona 85036
12954	Dickson Electronics Corporation 8700 E. Thomas Road P.O. Box 1390 Scottsdale, Arizona 85252
14304	Harris Corporation RF Communications Division 1680 University Avenue Rochester, New York 14610
17856	Siliconix, Inc. 2201 Laurelwood Road Santa Clara, California 95054
21912	Anzac Electronics, Div. of Adams-Russell Co., Inc. 39 Green Street Waltham, Massachusetts 02154
29604	Stackpole Components Co. P.O. Box 14466 Raleigh, N.C. 27610
32997	Bourns Inc. Trimpot Products Div. 1200 Columbia Ave. Riverside, California 92506

TABLE 2. INDEX OF MANUFACTURERS' CODES (Cont)

MFR CODE	MFR NAME AND ADDRESS
56289	Sprague Electric Company North Adams, Massachusetts 01247
73899	JFD Electronics Corporation 15th at 62nd Street Brooklyn, New York 11219
74970	Johnson E.F. Company, Inc. 299 10th Avenue S.W. Waseca, Minnesota 56093
75263	Keystone Carbon Company, Inc. 1935 State St. St. Marys Pennsylvania 15857
81312	Winchester Electronics Div. Litton Industries, Inc. Main Street and Hillside Avenue Oakville, Connecticut 06779
91293	Johanson Mfg. Company P.O. Box 329 Boonton, New Jersey 07005

NOTES:

1. Prefix all Reference Designations with A2A15.
2. Unless otherwise specified:
   A. All Capacitance values are in microfarads.
   B. All Inductance values are in microhenries.
   C. All Resistance values are in ohms, 1/4W, ± 10%.
3. L12 is wound on R19 to make Assembly Part No. 1920-0610.
   L13 is wound on R20 to make Assembly Part No. 1920-0610.

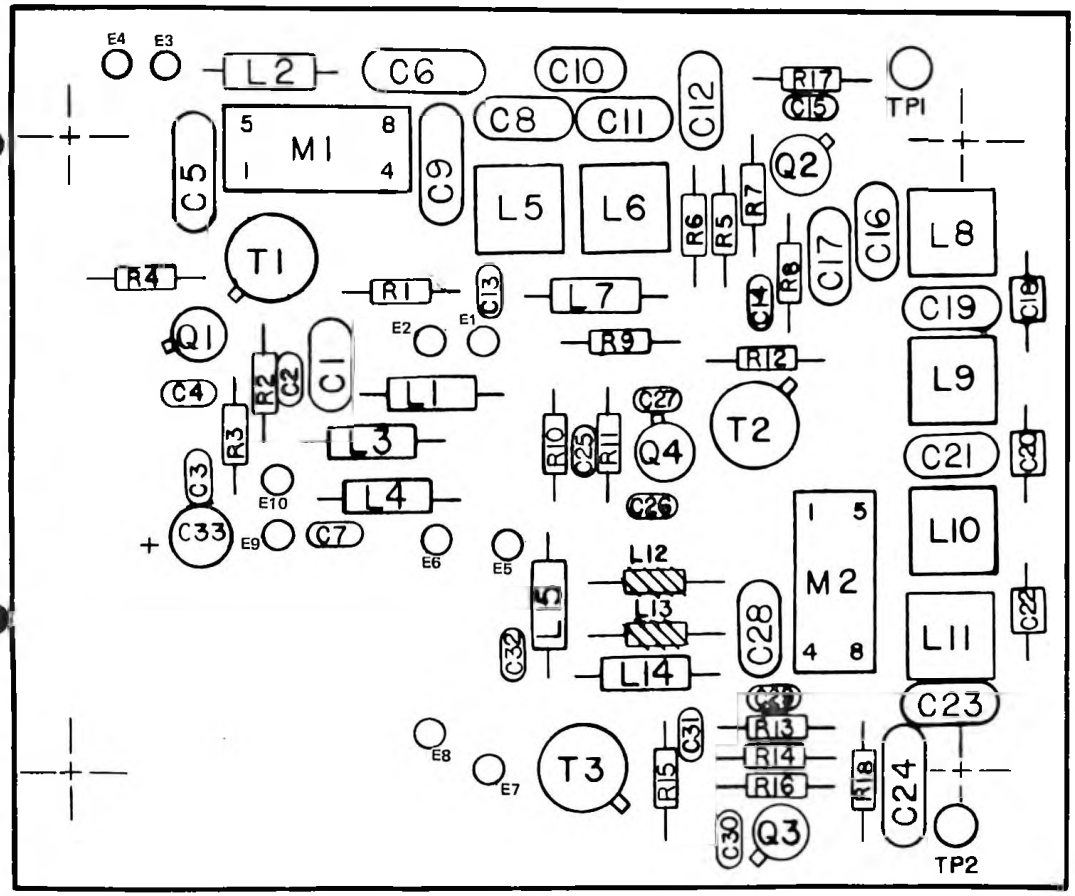

Figure 2. Translator PWB Assembly Component Locations

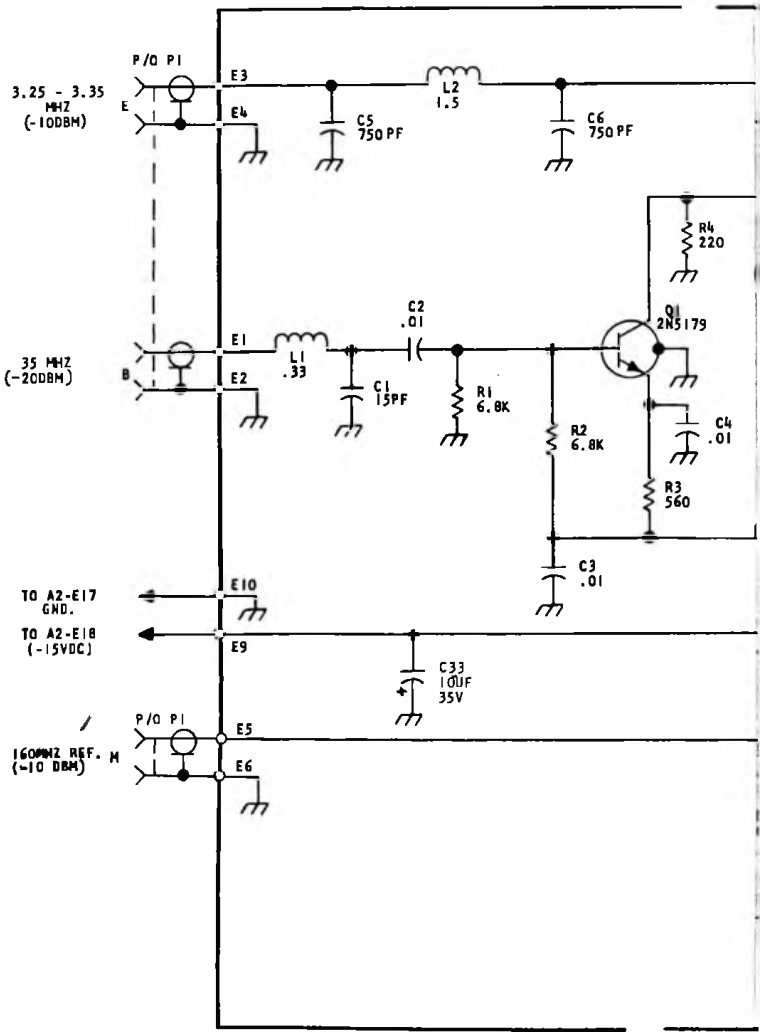

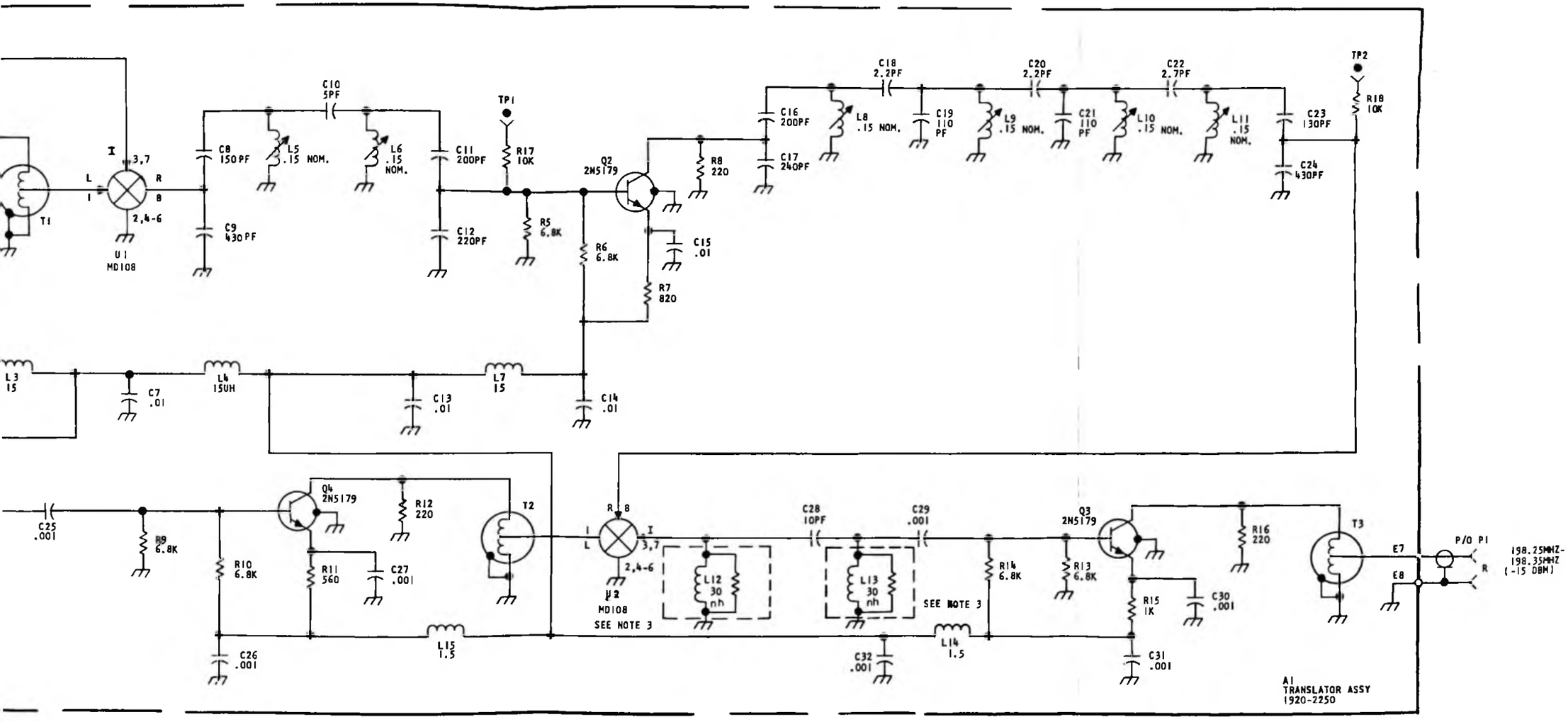

Figure 3. VFO/BFO Translator Assembly, Schematic Diagram (Sheet 1 of 3)

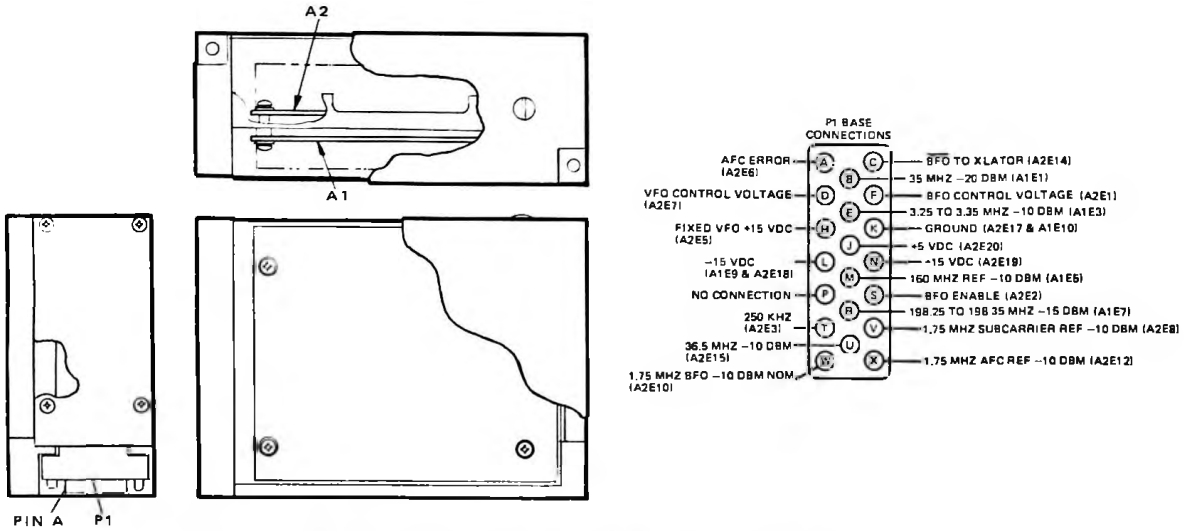

Figure 4. VFO/BFO Translator Assembly, Component Locations

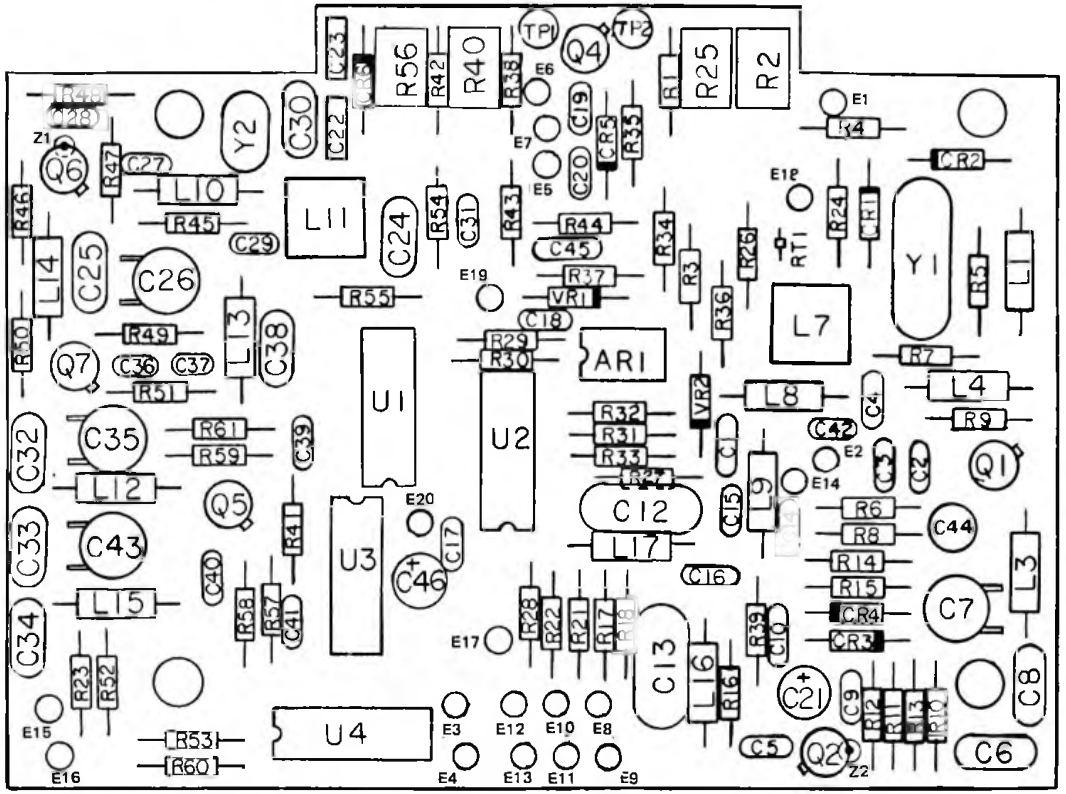

Figure 5. VFO/BFO PWB Assembly, Component Locations

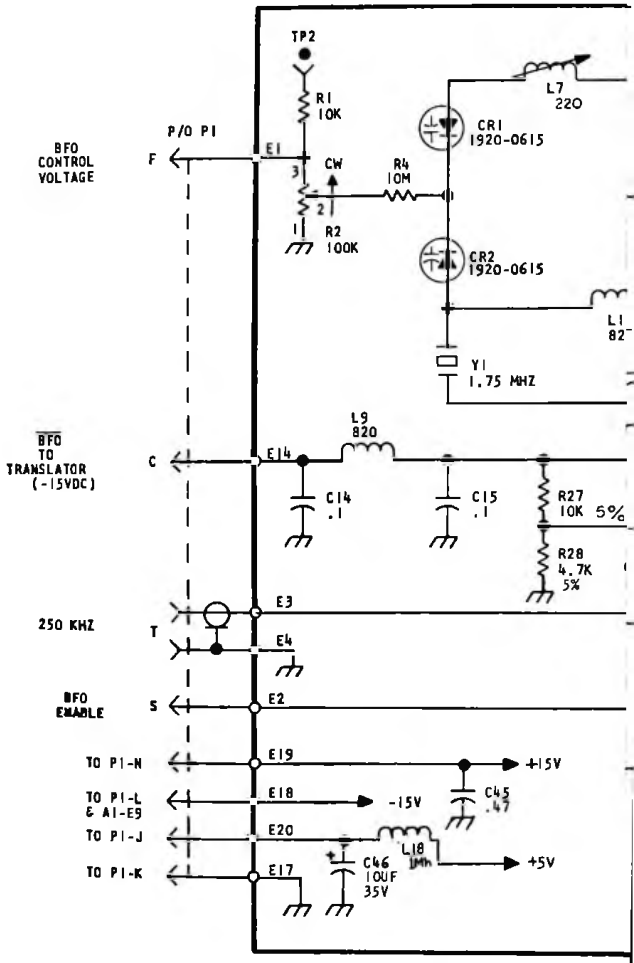

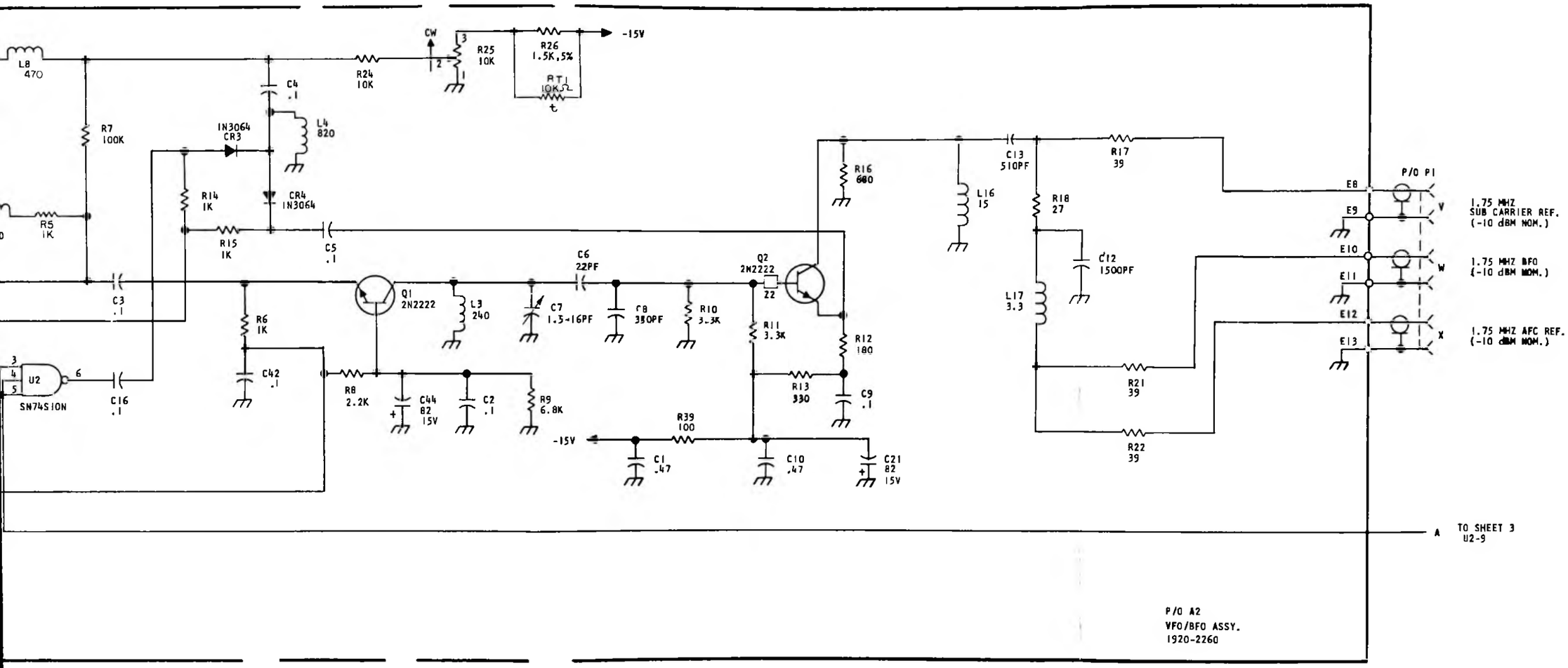

Figure 3. VFO/BFO Translator Assembly, Schematic Diagram (Sheet 2 of 3)

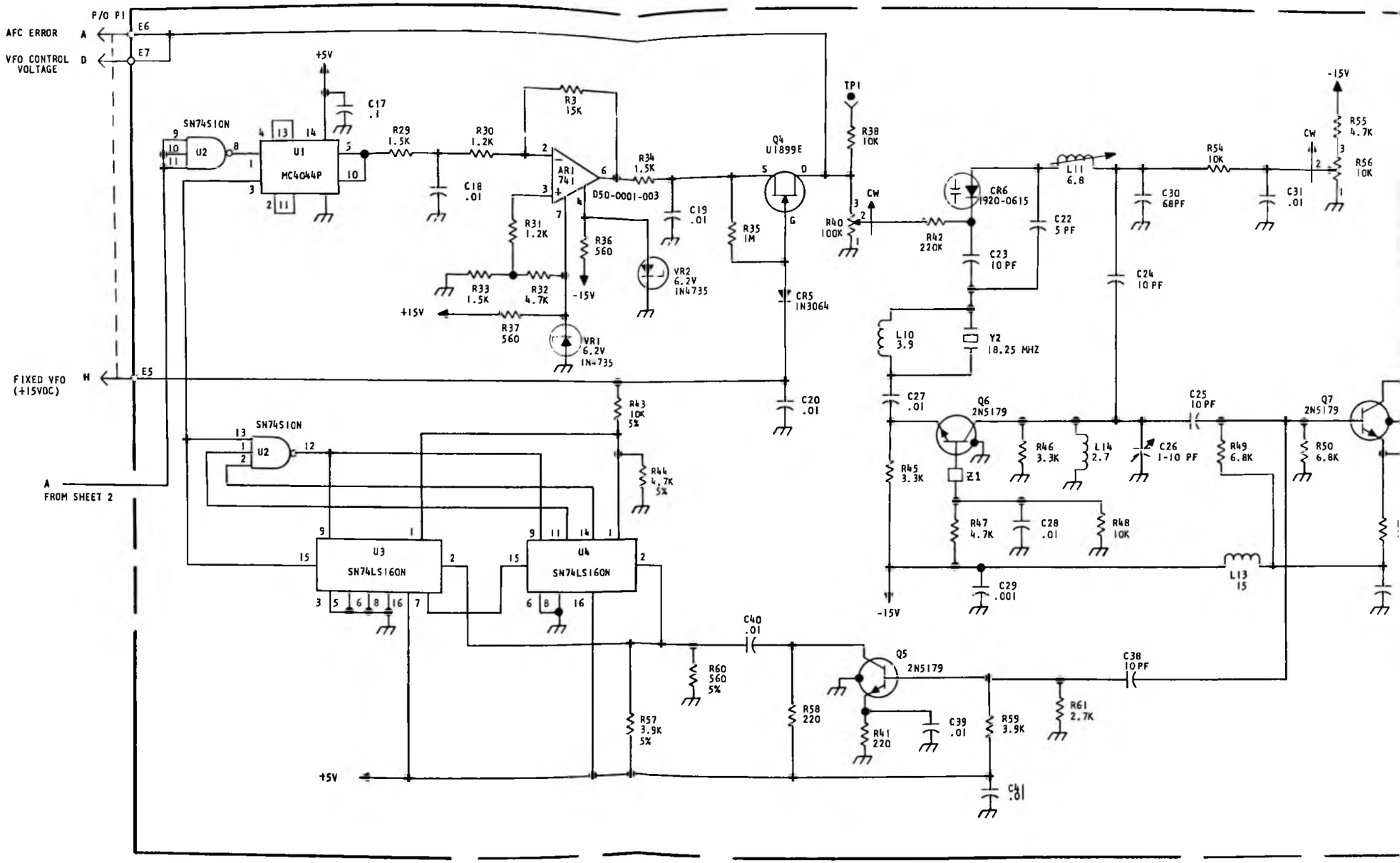
P/O P1
AFC ERROR
VFO CONTROL VOLTAGE
FIXED VFO (+15VDC)
A FROM SHEET 2
E6
E7
E5
SN74S10N
U2
U1
MC4044P
C17 .1
R29 1.5K
R30 1.2K
C18 .01
R3 15K
AR1 741
D50-0001-003
R34 1.5K
C19 .01
R31 1.2K
R36 560
R33 1.5K
R32 4.7K
R37 560
VR2 6.2V 1N4735
VR1 6.2V 1N4735
R35 1M
Q4 U1899E
CR5 1N3064
C20 .01
TP1
R38 10K
R40 100K
CW
R42 220K
CR6 1920-0615
L11 6.8
C22 5 PF
C23 10 PF
C24 10 PF
C30 68PF
R54 10K
C31 .01
R55 4.7K
R56 10K
L10 3.9
Y2 18.25 MHZ
C27 .01
Q6 2N5179
R45 3.3K
Z1
R46 3.3K
L14 2.7
C26 1-10 PF
C25 10PF
R49 6.8K
Q7 2N5179
R50 6.8K
R47 4.7K
C28 .01
R48 10K
C29 .001
L13 15
R43 10K 5%
R44 4.7K 5%
U3 SN74LS160N
U4 SN74LS160N
C40 .01
R60 560 5%
Q5 2N5179
C38 10PF
R57 3.9K 5%
R58 220
R41 220
C39 .01
R59 3.9K
R61 2.7K
C41 .01
+5V
+15V
-15V

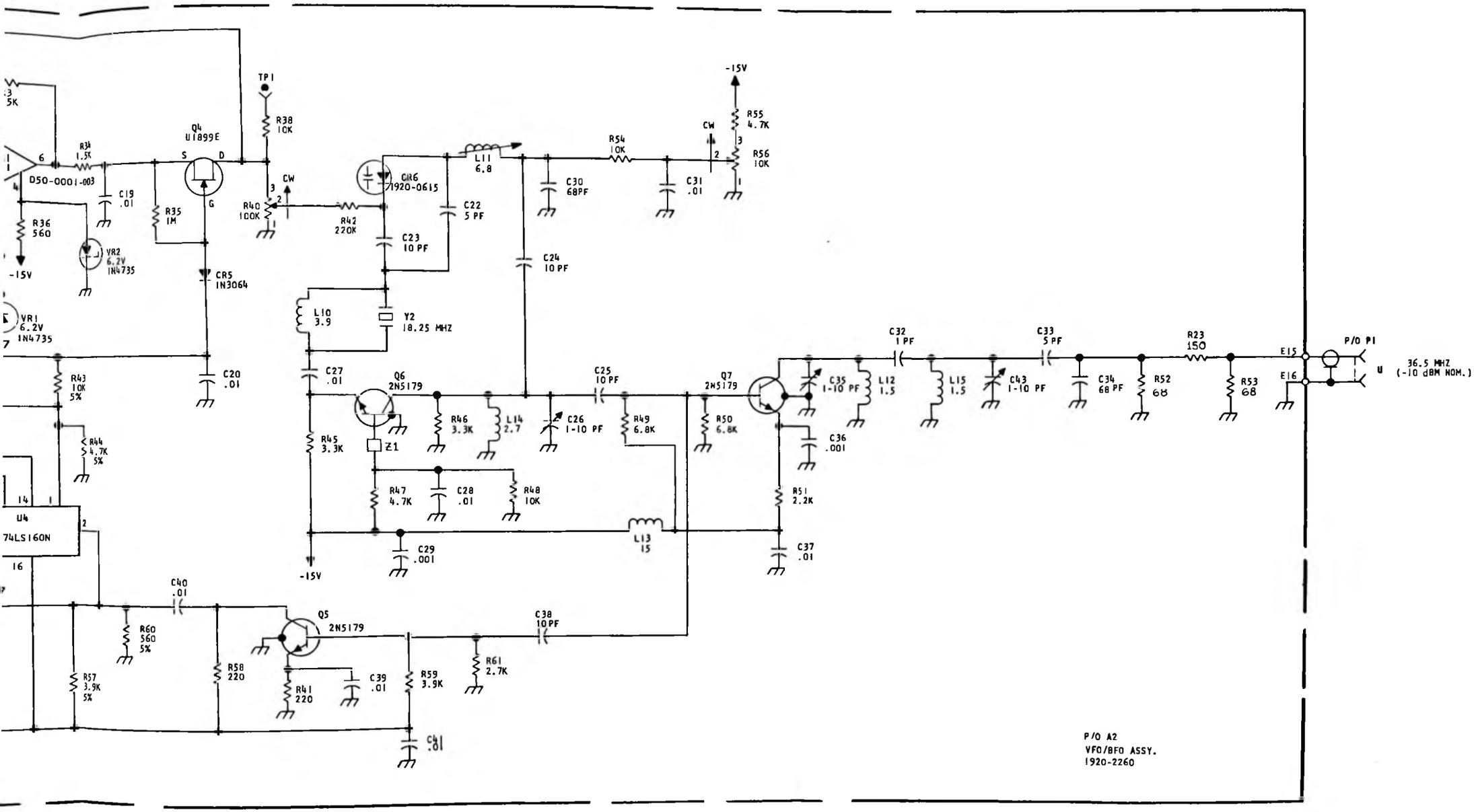

Figure 3. VFO/BFO Translator Assembly, Schematic Diagram (Sheet 3 of 3)

BRUGSKLAR DEL

MONTERIT 1 KX 6

LAGER NR. 5820-01-170-33 R/N 1920-1400
A2 A15

GENSTANDSNAVN VFO / BFO XLTR

ANTAL DELE	SERIE NR	DRIFTSTID
1		

INSPICERES INDEN MONTERING ☐ INSPICERES, HVIS UDLEVERING SKER EFTER

15/6 92 **MATINS STATUS SKRIVES PÅ BAGSIDEN**

REPARATIONSVÆRKSTED SIGNAL WORKSHOP LCO VIBORG

ITEM NR.	REP ORDRE NR	VÆRKST ORDRE NR.	STEMPEL
A2 A15			J Larsen

KONTROL OK - FORSIGTIG MED KONNECTOR
SEE OTHER SIDE

DATO

LOCATION 341-102A

Form. 8135-22-305-3139

MATINS STATUS

MATINS NR.	UDFØRT VED		SIGN.
	ENHED	DATO	

BEMÆRKNINGER

CAUTION - CONNECTOR CAN CAUSE TROUBLE

Fo 03-119

We welcome your comments:

Harris equipment and system manuals are constantly reviewed. We would like any information that will help improve our manuals. If you have any comments on this or any other Harris manual, please take a minute to write them down.

After writing down your comments, remove this page, fold, staple, apply postage, and mail at your earliest convenience.

We will be grateful for your response.

Comments: _____

(Name & Title)

FOLD HERE

TEAR HERE

PLACE STAMP HERE
The Post Office will not deliver mail without postage

To:

HARRIS CORPORATION, RF Communications Division
1680 University Avenue
Rochester, New York 14610
U.S.A.

ATTN: Publications Department

HARRIS

COMMUNICATION AND
INFORMATION PROCESSING